Manual No. '10 • PAC - DB - 136A

MHI

DATA BOOK

HYPER INVERTER PACKAGED AIR-CONDITIONERS

Ceiling Cassette - 4 way type

>FDT71VNXVD
>FDT125VNXVD
>FDT140VNXVD

Ceiling Suspended type

>FDEN71VNXVD
>FDEN125VNXVD
>FDEN140VNXVD

Ducted - Medium to High Static type

>FDU71VNXVD
>FDU125VNXVD
>FDU140VNXVD

MITSUBISHI HEAVY INDUSTRIES, LTD.

(2) Ceiling cassette-4way type (FDT)

(a) Single type

Adapted to **RoHS** directive

Item \ Model		FDT71VNXVD	
		Indoor unit **FDT71VD**	Outdoor unit **FDC71VNX**
		Panel **T-PSA-3AW-E**	
Power source			220-240V～50Hz / 220V～60Hz
Operation data		Cooling	Heating
Nominal capacity	kW	7.1 [3.2 (Min.)～8.0 (Max.)]	8.0 [3.6 (Min.)～9.0 (Max.)]
Power consumption	kW	2.04	1.94
Running current	A	9.1 / 9.5	8.7 / 9.0
Power factor	%	98	98
Inrush current	A	5 < Max.running current 17 >	
Sound Pressure Level	dB(A)	P-Hi : 46 Hi : 35 Me : 33 Lo : 31	Cooling : 51 Heating : 48
Exterior dimensions Height x Width x Depth	mm	Unit 246 × 840 × 840 Panel 35 × 950 × 950	750 × 880 (+88) × 340
Exterior appearance (Munsell color)		Plaster White (6.8Y8.9/0.2) near equivalent	Stucco White (4.2Y7.5/1.1) near equivalent
Net weight	kg	UNIT 24 PANEL 5.5	60
Refrigerant equipment Compressor type & Q'ty		—	RMT5118MDE2 × 1
Starting method		—	Direct line start
Refrigerant oil	ℓ	—	0.675 (M-MA68)
Heat exchanger		Louver fin & inner grooved tubing	M shape fin & inner grooved tubing
Refrigerant control		—	Electronic expansion valve
Air handling equipment Fan type & Q'ty		Turbo fan × 1	Propeller fan x 1
Motor <Starting method>	W	50 < Direct line start >	86 <Direct line start>
Air flow (Standard)	CMM	P-Hi : 28 Hi : 21 Me : 19 Lo : 17	Cooling : 60 Heating : 50
External static pressure	Pa	0	—
Outdoor air intake		Possible	—
Air filter, Q'ty		Pocket plastic net × 1 (Washable)	—
Shock & vibration absorber		Rubber sleeve (for fan motor)	Rubber sleeve (for Compressor)
Insulation (noise & heat)		Polyurethane form	—
Electric heater	W	—	20 (Crank case heater)
Remote controller		wired : RC-E4 (option) wireless : RCN-T-36W-E (option)	
Room temperature control		Thermostat by electronics	—
Safety equipment		Overload protection for fan motor Frost protection thermostat	Internal thermostat for fan motor Abnormal discharge temperature protection.
Installation data Refrigerant piping size	mm	Liquid line : I/U φ9.52 (3/8") Pipe φ9.52 (3/8") × 0.8 O/U φ9.52 (3/8")	
		Gas line : I/U φ15.88 (5/8") Pipe φ15.88 (5/8") × 1.0 O/U φ15.88 (5/8")	
Connecting method		Flare piping	Flare piping
Refrigerant line (one way) length		Max.50m	
Vertical height difference between outdoor unit and indoor unit		Max.30m (Outdoor unit is higher) Max.15m (Outdoor unit is lower)	
Refrigerant Quantity		R410A 2.95kg in outdoor unit (incl. the amount for the piping of : 30m)	
Drain pump		Built-in Drain pump	—
Drain		Hose Connectable with VP20	Holes size φ20 × 3pcs
Insulation for piping		Necessary (both Liquid & Gas lines)	
Standard Accessories		Mounting kit, Drain hose	—

Notes (1) The data are measured at the following conditions.

Item	Indoor air temperature		Outdoor air temperature	
Operation	DB	WB	DB	WB
Cooling	27˚C	19˚C	35˚C	24˚C
Heating	20˚C		7˚C	6˚C

(2) This packaged air-conditioner is manufactured and tested in conformity with the ISO.
(3) Sound pressure level indicates the value in an anechoic chamber. During operation these value are somewhat higher due to ambient temperature.
(4) The operation data indicates when the air-conditioner is operated at 230V50Hz or 220V60Hz.
(5) If wireless remote controller is used, only 3-speed fan setting (Hi-Me-Lo) is available.

PJF000Z194

Adapted to **RoHS** directive

Item \ Model		FDT125VNXVD	
		Indoor unit **FDT125VD**	Outdoor unit **FDC125VNX**
		Panel **T-PSA-3AW-E**	
Power source			220-240V～50Hz / 220V～60Hz
Operation data		Cooling	Heating
Nominal capacity	kW	12.5 [5.0 (Min.)～14.0 (Max.)]	14.0 [4.0 (Min.)～17.0 (Max.)]
Power consumption	kW	3.28	3.43
Running current	A	14.6 / 15.2	15.2 / 15.9
Power factor	%	98	98
Inrush current	A	5 < Max.running current 26 >	
Sound Pressure Level	dB(A)	P-Hi : 51 Hi : 42 Me : 40 Lo : 37	Cooling : 48 Heating : 50
Exterior dimensions Height x Width x Depth	mm	Unit 298 × 840 × 840 Panel 35 × 950 × 950	1,300 × 970 × 370
Exterior appearance (Munsell color)		Plaster White (6.8Y8.9/0.2) near equivalent	Stucco White (4.2Y7.5/1.1) near equivalent
Net weight	kg	UNIT 27 PANEL 5.5	105
Refrigerant equipment Compressor type & Q'ty		—	RMT5134MDE2 × 1
Starting method		—	Direct line start
Refrigerant oil	ℓ	—	0.9 (M-MA68)
Heat exchanger		Louver fin & inner grooved tubing	M shape fin & inner grooved tubing
Refrigerant control		—	Electronic expansion valve
Air handling equipment Fan type & Q'ty		Turbo fan × 1	Propeller fan × 2
Motor <Starting method>	W	140 < Direct line start >	86 × 2 < Direct line start >
Air flow (Standard)	CMM	P-Hi : 37 Hi : 30 Me : 27 Lo : 23	100
External static pressure	Pa	0	—
Outdoor air intake		Possible	—
Air filter, Q'ty		Pocket plastic net × 1 (Washable)	—
Shock & vibration absorber		Rubber sleeve (for fan motor)	Rubber sleeve (for Compressor)
Insulation (noise & heat)		Polyurethane form	—
Electric heater	W	—	20 (Crank case heater)
Remote controller		wired : RC-E4 (option) wireless : RCN-T-36W-E (option)	
Room temperature control		Thermostat by electronics	—
Safety equipment		Overload protection for fan motor Frost protection thermostat	Internal thermostat for fan motor Abnormal discharge temperature protection.
Installation data Refrigerant piping size	mm	Liquid line : I/U ϕ9.52 (3/8") Pipe ϕ9.52 (3/8") × 0.8 O/U ϕ9.52 (3/8")	
		Gas line : I/U ϕ15.88 (5/8") Pipe ϕ15.88 (5/8") × 1.0 O/U ϕ15.88 (5/8")	
Connecting method		Flare piping	Flare piping
Refrigerant line (one way) length		Max.100m	
Vertical height difference between outdoor unit and indoor unit		Max.30m (Outdoor unit is higher) Max.15m (Outdoor unit is lower)	
Refrigerant Quantity		R410A 4.5kg in outdoor unit (incl. the amount for the piping of : 30m)	
Drain pump		Built-in Drain pump	—
Drain		Hose Connectable with VP20	Holes size ϕ20 × 3pcs
Insulation for piping		Necessary (both Liquid & Gas lines)	
Standard Accessories		Mounting kit, Drain hose	Edging

Notes (1) The data are measured at the following conditions.

Item	Indoor air temperature		Outdoor air temperature	
Operation	DB	WB	DB	WB
Cooling	27˚C	19˚C	35˚C	24˚C
Heating	20˚C		7˚C	6˚C

(2) This packaged air-conditioner is manufactured and tested in conformity with the ISO.
(3) Sound pressure level indicates the value in an anechoic chamber. During operation these value are somewhat higher due to ambient temperature.
(4) The operation data indicates when the air-conditioner is operated at 230V50Hz or 220V60Hz.
(5) If wireless remote controller is used, only 3-speed fan setting (Hi-Me-Lo) is available.

PJF000Z194

Adapted to **RoHS** directive

Item \ Model		FDT140VNXVD	
		Indoor unit **FDT140VD**	Outdoor unit **FDC140VNX**
		Panel **T-PSA-3AW-E**	
Power source			220-240V～50Hz / 220V～60Hz
Operation data		Cooling	Heating
Nominal capacity	kW	14.0 [5.0 (Min.)～16.0 (Max.)]	16.0 [4.0 (Min.)～18.0 (Max.)]
Power consumption	kW	4.19	4.20
Running current	A	18.6 / 19.4	18.6 / 19.5
Power factor	%	98	98
Inrush current	A	5 < Max.running current 26 >	
Sound Pressure Level	dB(A)	P-Hi : 51 Hi : 43 Me : 41 Lo : 38	Cooling : 49 Heating : 52
Exterior dimensions Height x Width x Depth	mm	Unit 298 × 840 × 840 Panel 35 × 950 × 950	1,300 × 970 × 370
Exterior appearance (Munsell color)		Plaster White (6.8Y8.9/0.2) near equivalent	Stucco White (4.2Y7.5/1.1) near equivalent
Net weight	kg	UNIT 27 PANEL 5.5	105
Refrigerant equipment Compressor type & Q'ty		—	RMT5134MDE2 × 1
Starting method		—	Direct line start
Refrigerant oil	ℓ	—	0.9 (M-MA68)
Heat exchanger		Louver fin & inner grooved tubing	M shape fin & inner grooved tubing
Refrigerant control		—	Electronic expansion valve
Air handling equipment Fan type & Q'ty		Turbo fan × 1	Propeller fan × 2
Motor <Starting method>	W	140 < Direct line start >	86 × 2 < Direct line start >
Air flow (Standard)	CMM	P-Hi : 37 Hi : 30 Me : 27 Lo : 23	100
External static pressure	Pa	0	—
Outdoor air intake		Possible	—
Air filter, Q'ty		Pocket plastic net × 1 (Washable)	—
Shock & vibration absorber		Rubber sleeve (for fan motor)	Rubber sleeve (for Compressor)
Insulation (noise & heat)		Polyurethane form	—
Electric heater	W	—	20 (Crank case heater)
Remote controller		wired : RC-E4 (option) wireless : RCN-T-36W-E (option)	
Room temperature control		Thermostat by electronics	—
Safety equipment		Overload protection for fan motor Frost protection thermostat	Internal thermostat for fan motor Abnormal discharge temperature protection.
Installation data Refrigerant piping size	mm	Liquid line : I/U ϕ9.52 (3/8") Pipe ϕ9.52 (3/8") × 0.8 O/U ϕ9.52 (3/8")	
		Gas line : I/U ϕ15.88 (5/8") Pipe ϕ15.88 (5/8") × 1.0 O/U ϕ15.88 (5/8")	
Connecting method		Flare piping	Flare piping
Refrigerant line (one way) length		Max.100m	
Vertical height difference between outdoor unit and indoor unit		Max.30m (Outdoor unit is higher) Max.15m (Outdoor unit is lower)	
Refrigerant Quantity		R410A 4.5kg in outdoor unit (incl. the amount for the piping of : 30m)	
Drain pump		Built-in Drain pump	—
Drain		Hose Connectable with VP20	Holes size ϕ20 × 3pcs
Insulation for piping		Necessary (both Liquid & Gas lines)	
Standard Accessories		Mounting kit, Drain hose	Edging

Notes (1) The data are measured at the following conditions.

Item	Indoor air temperature		Outdoor air temperature	
Operation	DB	WB	DB	WB
Cooling	27˚C	19˚C	35˚C	24˚C
Heating	20˚C		7˚C	6˚C

(2) This packaged air-conditioner is manufactured and tested in conformity with the ISO.
(3) Sound pressure level indicates the value in an anechoic chamber. During operation these value are somewhat higher due to ambient temperature.
(4) The operation data indicates when the air-conditioner is operated at 230V50Hz or 220V60Hz.
(5) If wireless remote controller is used, only 3-speed fan setting (Hi-Me-Lo) is available.

PJF000Z194

(3) Ceiling suspended type (FDEN)

(a) Single type

Adapted to **RoHS** directive

Item \ Model		FDEN71VNXVD	
		Indoor unit **FDEN71VD**	Outdoor unit **FDC71VNX**
		—	
Power source			220-240V～50Hz / 220V～60Hz
Operation data		Cooling	Heating
Nominal capacity	kW	7.1 [3.2 (Min.)～8.0 (Max.)]	8.0 [3.6 (Min.)～9.0 (Max.)]
Power consumption	kW	2.11	2.11
Running current	A	9.4 / 9.8	9.4 / 9.8
Power factor	%	98	98
Inrush current	A	5 < Max.running current 17 >	
Sound Pressure Level	dB(A)	P-Hi : 50 Hi : 41 Me : 39 Lo : 38	Cooling : 51 Heating : 48
Exterior dimensions Height x Width x Depth	mm	210 × 1,320 × 690	750 × 880 (+88) × 340
Exterior appearance (Munsell color)		Plaster White (6.8Y8.9/0.2) near equivalent	Stucco White (4.2Y7.5/1.1) near equivalent
Net weight	kg	37	60
Refrigerant equipment Compressor type & Q'ty		—	RMT5118MDE2 × 1
Starting method		—	Direct line start
Refrigerant oil	ℓ	—	0.675 (M-MA68)
Heat exchanger		Louver fin & inner grooved tubing	M shape fin & inner grooved tubing
Refrigerant control		—	Electronic expansion valve
Air handling equipment Fan type & Q'ty		Centrifugal fan × 4	Propeller fan x 1
Motor <Starting method>	W	20 × 2 < Direct line start >	86 <Direct line start>
Air flow (Standard)	CMM	P-Hi : 22 Hi : 18 Me : 14 Lo : 12	Cooling : 60 Heating : 50
External static pressure	Pa	0	—
Outdoor air intake		Not possible	—
Air filter, Q'ty		Pocket plastic net × 2 (Washable)	—
Shock & vibration absorber		Rubber sleeve (for fan motor)	Rubber sleeve (for Compressor)
Insulation (noise & heat)		Polyurethane form	—
Electric heater	W	—	20 (Crank case heater)
Remote controller		wired : RC-E4 (option) wireless : RCN-E1R (option)	
Room temperature control		Thermostat by electronics	—
Safety equipment		Internal thermostat for fan motor Frost protection thermostat	Internal thermostat for fan motor Abnormal discharge temperature protection.
Installation data Refrigerant piping size	mm	Liquid line : I/U ϕ9.52 (3/8") Pipe ϕ9.52 (3/8") × 0.8 O/U ϕ9.52 (3/8")	
		Gas line : I/U ϕ15.88 (5/8") Pipe ϕ15.88 (5/8") × 1.0 O/U ϕ15.88 (5/8")	
Connecting method		Flare piping	Flare piping
Refrigerant line (one way) length		Max.50m	
Vertical height difference between outdoor unit and indoor unit		Max.30m (Outdoor unit is higher) Max.15m (Outdoor unit is lower)	
Refrigerant Quantity		R410A 2.95kg in outdoor unit (incl. the amount for the piping of : 30m)	
Drain pump		—	—
Drain		Hose Connectable with VP20	Holes size ϕ20 × 3pcs
Insulation for piping		Necessary (both Liquid & Gas lines)	
Standard Accessories		Mounting kit, Drain hose	—

Notes (1) The data are measured at the following conditions.

Item	Indoor air temperature		Outdoor air temperature	
Operation	DB	WB	DB	WB
Cooling	27˚C	19˚C	35˚C	24˚C
Heating	20˚C		7˚C	6˚C

(2) This packaged air-conditioner is manufactured and tested in conformity with the ISO.
(3) Sound pressure level indicates the value in an anechoic chamber. During operation these value are somewhat higher due to ambient temperature.
(4) The operation data indicates when the air-conditioner is operated at 230V50Hz or 220V60Hz.
(5) If wireless remote controller is used, only 3-speed fan setting (Hi-Me-Lo) is available.

PFA003Z911

Adapted to **RoHS** directive

Item \ Model		FDEN125VNXVD	
		Indoor unit **FDEN125VD**	Outdoor unit **FDC125VNX**
		—	
Power source			220-240V～50Hz / 220V～60Hz
Operation data		Cooling	Heating
Nominal capacity	kW	12.5 [5.0 (Min.)～14.0 (Max.)]	14.0 [4.0 (Min.)～17.0 (Max.)]
Power consumption	kW	3.86	3.77
Running current	A	17.1 / 17.9	16.7 / 17.5
Power factor	%	98	98
Inrush current	A	5 < Max.running current 26 >	
Sound Pressure Level	dB(A)	P-Hi : 50 Hi : 46 Me : 44 Lo : 43	Cooling : 48 Heating : 50
Exterior dimensions Height x Width x Depth	mm	250 × 1,620 × 690	1,300 × 970 × 370
Exterior appearance (Munsell color)		Plaster White (6.8Y8.9/0.2) near equivalent	Stucco White (4.2Y7.5/1.1) near equivalent
Net weight	kg	49	105
Refrigerant equipment Compressor type & Q'ty		—	RMT5134MDE2 × 1
Starting method		—	Direct line start
Refrigerant oil	ℓ	—	0.9 (M-MA68)
Heat exchanger		Louver fin & inner grooved tubing	M shape fin & inner grooved tubing
Refrigerant control		—	Electronic expansion valve
Air handling equipment Fan type & Q'ty		Centrifugal fan × 4	Propeller fan × 2
Motor <Starting method>	W	40 × 2 < Direct line start >	86 × 2 < Direct line start >
Air flow (Standard)	CMM	P-Hi : 32 Hi : 29 Me : 26 Lo : 23	100
External static pressure	Pa	0	—
Outdoor air intake		Not possible	—
Air filter, Q'ty		Pocket plastic net × 2 (Washable)	—
Shock & vibration absorber		Rubber sleeve (for fan motor)	Rubber sleeve (for Compressor)
Insulation (noise & heat)		Polyurethane form	—
Electric heater	W	—	20 (Crank case heater)
Remote controller		wired : RC-E4 (option) wireless : RCN-E1R (option)	
Room temperature control		Thermostat by electronics	—
Safety equipment		Internal thermostat for fan motor Frost protection thermostat	Internal thermostat for fan motor Abnormal discharge temperature protection.
Installation data Refrigerant piping size	mm	Liquid line : I/U ϕ9.52 (3/8") Pipe ϕ9.52 (3/8") × 0.8 O/U ϕ9.52 (3/8")	
		Gas line : I/U ϕ15.88 (5/8") Pipe ϕ15.88 (5/8") × 1.0 O/U ϕ15.88 (5/8")	
Connecting method		Flare piping	Flare piping
Refrigerant line (one way) length		Max.100m	
Vertical height difference between outdoor unit and indoor unit		Max.30m (Outdoor unit is higher) Max.15m (Outdoor unit is lower)	
Refrigerant Quantity		R410A 4.5kg in outdoor unit (incl. the amount for the piping of : 30m)	
Drain pump		—	—
Drain		Hose Connectable with VP20	Holes size ϕ20 × 3pcs
Insulation for piping		Necessary (both Liquid & Gas lines)	
Standard Accessories		Mounting kit, Drain hose	Edging

Notes (1) The data are measured at the following conditions.

Item	Indoor air temperature		Outdoor air temperature	
Operation	DB	WB	DB	WB
Cooling	27˚C	19˚C	35˚C	24˚C
Heating	20˚C		7˚C	6˚C

(2) This packaged air-conditioner is manufactured and tested in conformity with the ISO.
(3) Sound pressure level indicates the value in an anechoic chamber. During operation these value are somewhat higher due to ambient temperature.
(4) The operation data indicates when the air-conditioner is operated at 230V50Hz or 220V60Hz.
(5) If wireless remote controller is used, only 3-speed fan setting (Hi-Me-Lo) is available.

PFA003Z911

Adapted to **RoHS** directive

Item \ Model		FDEN140VNXVD	
		Indoor unit **FDEN140VD**	Outdoor unit **FDC140VNX**
		—	
Power source			220-240V～50Hz / 220V～60Hz
Operation data		Cooling	Heating
Nominal capacity	kW	14.0 [5.0 (Min.)～16.0 (Max.)]	16.0 [4.0 (Min.)～18.0 (Max.)]
Power consumption	kW	4.98	4.69
Running current	A	22.1 / 23.1	20.8 / 21.8
Power factor	%	98	98
Inrush current	A	5 < Max.running current 26 >	
Sound Pressure Level	dB(A)	P-Hi : 50 Hi : 46 Me : 44 Lo : 43	Cooling : 49 Heating : 52
Exterior dimensions Height x Width x Depth	mm	250 × 1,620 × 690	1,300 × 970 × 370
Exterior appearance (Munsell color)		Plaster White (6.8Y8.9/0.2) near equivalent	Stucco White (4.2Y7.5/1.1) near equivalent
Net weight	kg	49	105
Refrigerant equipment Compressor type & Q'ty		—	RMT5134MDE2 × 1
Starting method		—	Direct line start
Refrigerant oil	ℓ	—	0.9 (M-MA68)
Heat exchanger		Louver fin & inner grooved tubing	M shape fin & inner grooved tubing
Refrigerant control		—	Electronic expansion valve
Air handling equipment Fan type & Q'ty		Centrifugal fan × 4	Propeller fan × 2
Motor <Starting method>	W	40 × 2 < Direct line start >	86 × 2 < Direct line start >
Air flow (Standard)	CMM	P-Hi : 32 Hi : 29 Me : 26 Lo : 23	100
External static pressure	Pa	0	—
Outdoor air intake		Not possible	—
Air filter, Q'ty		Pocket plastic net × 2 (Washable)	—
Shock & vibration absorber		Rubber sleeve (for fan motor)	Rubber sleeve (for Compressor)
Insulation (noise & heat)		Polyurethane form	—
Electric heater	W	—	20 (Crank case heater)
Remote controller		wired : RC-E4 (option) wireless : RCN-E1R (option)	
Room temperature control		Thermostat by electronics	—
Safety equipment		Internal thermostat for fan motor Frost protection thermostat	Internal thermostat for fan motor Abnormal discharge temperature protection.
Installation data Refrigerant piping size	mm	Liquid line : I/U ϕ9.52 (3/8") Pipe ϕ9.52 (3/8") × 0.8 O/U ϕ9.52 (3/8")	
		Gas line : I/U ϕ15.88 (5/8") Pipe ϕ15.88 (5/8") × 1.0 O/U ϕ15.88 (5/8")	
Connecting method		Flare piping	Flare piping
Refrigerant line (one way) length		Max.100m	
Vertical height difference between outdoor unit and indoor unit		Max.30m (Outdoor unit is higher) Max.15m (Outdoor unit is lower)	
Refrigerant Quantity		R410A 4.5kg in outdoor unit (incl. the amount for the piping of : 30m)	
Drain pump		—	—
Drain		Hose Connectable with VP20	Holes size ϕ20 × 3pcs
Insulation for piping		Necessary (both Liquid & Gas lines)	
Standard Accessories		Mounting kit, Drain hose	Edging

Notes (1) The data are measured at the following conditions.

Item	Indoor air temperature		Outdoor air temperature	
Operation	DB	WB	DB	WB
Cooling	27˚C	19˚C	35˚C	24˚C
Heating	20˚C		7˚C	6˚C

(2) This packaged air-conditioner is manufactured and tested in conformity with the ISO.
(3) Sound pressure level indicates the value in an anechoic chamber. During operation these value are somewhat higher due to ambient temperature.
(4) The operation data indicates when the air-conditioner is operated at 230V50Hz or 220V60Hz.
(5) If wireless remote controller is used, only 3-speed fan setting (Hi-Me-Lo) is available.

PFA003Z911

(5) Duct connected-High static pressure type (FDU)

(a) Single type

Adapted to **RoHS** directive

Item \ Model		FDU71VNXVD	
		Indoor unit **FDU71VD**	Outdoor unit **FDC71VNX**
		—	
Power source			220-240V～50Hz
Operation data		Cooling	Heating
Nominal capacity	kW	7.1 [3.2 (Min.)～8.0 (Max.)]	8.0 [3.6 (Min.)～9.0 (Max.)]
Power consumption	kW	2.15	2.15
Running current	A	9.6	9.5
Power factor	%	98	99
Inrush current	A	5 < Max.running current 17 >	
Sound Pressure Level	dB(A)	Hi : 41 Lo : 37	Cooling : 51, Heating : 48
Exterior dimensions Height x Width x Depth	mm	295 × 850 × 650	750 × 880 (+88) × 340
Exterior appearance (Munsell color)		—	Stucco White (4.2Y7.5/1.1) near equivalent
Net weight	kg	40	60
Refrigerant equipment Compressor type & Q'ty		—	RMT5118MDE2 × 1
Starting method		—	Direct line start
Refrigerant oil	ℓ	—	0.675 (M-MA68)
Heat exchanger		Louver fin & inner grooved tubing	M shape fin & inner grooved tubing
Refrigerant control		—	Electronic expansion valve
Air handling equipment Fan type & Q'ty		Centrifugal fan × 2	Propeller fan x 1
Motor <Starting method>	W	230 < Direct line start >	86 < Direct line start >
Air flow (Standard)	CMM	Hi : 20 Lo : 17	Cooling : 60, Heating : 50
External static pressure	Pa	Standard : 60 Max : 130	—
Outdoor air intake		Possible (on return duct)	—
Air filter, Q'ty		Procure locally	—
Shock & vibration absorber		Rubber sleeve (for fan motor)	Rubber sleeve (for Compressor)
Insulation (noise & heat)		Polyurethane form	—
Electric heater	W	—	20 (Crank case heater)
Remote controller		wired : RC-E4 (option) wireless : RCN-KIT3-E (option)	
Room temperature control		Thermostat by electronics	—
Safety equipment		Internal thermostat for fan motor Frost protection thermostat	Internal thermostat for fan motor Abnormal discharge temperature protection.
Installation data Refrigerant piping size	mm	Liquid line : I/U ϕ9.52 (3/8") Pipe ϕ9.52 (3/8") × 0.8 O/U ϕ9.52 (3/8")	
		Gas line : I/U ϕ15.88 (5/8") Pipe ϕ15.88 (5/8") × 1.0 O/U ϕ15.88 (5/8")	
Connecting method		Flare piping	Flare piping
Refrigerant line (one way) length		Max.50m	
Vertical height difference between outdoor unit and indoor unit		Max.30m (Outdoor unit is higher) Max.15m (Outdoor unit is lower)	
Refrigerant Quantity		R410A 2.95kg in outdoor unit (incl. the amount for the piping of : 30m)	
Drain pump		Built-in Drain pump	—
Drain		Hose Connectable with VP20	Holes size ϕ20 x 3pcs
Insulation for piping		Necessary (both Liquid & Gas lines)	
Standard Accessories		Drain hose	—

Notes (1) The data are measured at the following conditions.

Item	Indoor air temperature		Outdoor air temperature		External static pressure of indoor unit [Pa]
Operation	DB	WB	DB	WB	
Cooling	27˚C	19˚C	35˚C	24˚C	60
Heating	20˚C		7˚C	6˚C	

(2) This packaged air-conditioner is manufactured and tested in conformity with the ISO.
(3) Sound pressure level indicates the value in an anechoic chamber. During operation these value are somewhat higher due to ambient temperature.
(4) The operation data indicates when the air-conditioner is operated at 230V50Hz
(5) External static pressure can be changed from standard external static pressure (factory setting) to maximum external static pressuer (high static pressure setting) by remote controller.
(6) Value of sound pressure level become increased 5dB(A), when external static pressure is 130Pa.

PJD001Z311

Adapted to **RoHS** directive

Item \ Model		FDU125VNXVD	
		Indoor unit **FDU125VD**	Outdoor unit **FDC125VNX**
		—	
Power source			220-240V～50Hz
Operation data		Cooling	Heating
Nominal capacity	kW	12.5 [5.0(Min.)～14.0(Max.)]	14.0 [4.0(Min.)～17.0(Max.)]
Power consumption	kW	3.44	3.67
Running current	A	15.3	16.3
Power factor	%	98	98
Inrush current	A	5 < Max.running current 29 >	
Sound Pressure Level	dB(A)	Hi : 43 Lo : 38	Cooling : 48 Heating : 50
Exterior dimensions Height x Width x Depth	mm	350 × 1,370 × 650	1,300 × 970 × 370
Exterior appearance (Munsell color)		—	Stucco White (4.2Y7.5/1.1) near equivalent
Net weight	kg	63	105
Refrigerant equipment Compressor type & Q'ty		—	RMT5134MDE2 × 1
Starting method		—	Direct line start
Refrigerant oil	ℓ	—	0.9 (M-MA68)
Heat exchanger		Louver fin & inner grooved tubing	M shape fin & inner grooved tubing
Refrigerant control		—	Electronic expansion valve
Air handling equipment Fan type & Q'ty		Centrifugal fan × 2	Propeller fan × 2
Motor <Starting method>	W	370 < Direct line start >	86 x 2 < Direct line start >
Air flow (Standard)	CMM	Hi : 42 Lo : 33.5	100
External static pressure	Pa	Standard : 60 Max : 130	—
Outdoor air intake		Possible (on return duct)	—
Air filter, Q'ty		Procure locally	—
Shock & vibration absorber		Rubber sleeve (for fan motor)	Rubber sleeve (for Compressor)
Insulation (noise & heat)		Polyurethane form	—
Electric heater	W	—	20 (Crank case heater)
Remote controller		wired : RC-E4 (option) wireless : RCN-KIT3-E (option)	
Room temperature control		Thermostat by electronics	—
Safety equipment		Internal thermostat for fan motor Frost protection thermostat	Internal thermostat for fan motor Abnormal discharge temperature protection.
Installation data Refrigerant piping size	mm	Liquid line : I/U ϕ9.52 (3/8") Pipe ϕ9.52 (3/8") × 0.8 O/U ϕ9.52 (3/8")	
		Gas line : I/U ϕ15.88 (5/8") Pipe ϕ15.88 (5/8") × 1.0 O/U ϕ15.88 (5/8")	
Connecting method		Flare piping	Flare piping
Refrigerant line (one way) length		Max.100m	
Vertical height difference between outdoor unit and indoor unit		Max.30m (Outdoor unit is higher) Max.15m (Outdoor unit is lower)	
Refrigerant Quantity		R410A 4.5kg in outdoor unit (incl. the amount for the piping of : 30m)	
Drain pump		Built-in Drain pump	—
Drain		Hose Connectable with VP20	Holes size ϕ20 × 3pcs
Insulation for piping		Necessary (both Liquid & Gas lines)	
Standard Accessories		Drain hose	Edging

Notes (1) The data are measured at the following conditions.

Item	Indoor air temperature		Outdoor air temperature		External static pressure of indoor unit [Pa]
Operation	DB	WB	DB	WB	
Cooling	27℃	19℃	35℃	24℃	60
Heating	20℃		7℃	6℃	

(2) This packaged air-conditioner is manufactured and tested in conformity with the ISO.
(3) Sound pressure level indicates the value in an anechoic chamber. During operation these value are somewhat higher due to ambient temperature.
(4) The operation data indicates when the air-conditioner is operated at 230V50Hz
(5) External static pressure can be changed from standard external static pressure (factory setting) to maximum external static pressuer (high static pressure setting) by remote controller.
(6) Value of sound pressure level become increased 5dB(A), when external static pressure is 130Pa.

PJD001Z311

Adapted to **RoHS** directive

Item \ Model		FDU140VNXVD	
		Indoor unit **FDU140VD**	Outdoor unit **FDC140VNX**
		—	
Power source			220-240V～50Hz
Operation data		Cooling	Heating
Nominal capacity	kW	14.0 [5.0(Min.)～16.0(Max.)]	16.0 [4.0(Min.)～18.0(Max.)]
Power consumption	kW	4.20	4.30
Running current	A	18.6	19.1
Power factor	%	98	98
Inrush current	A	5 < Max.running current 30 >	
Sound Pressure Level	dB(A)	Hi : 43 Lo : 38	Cooling : 49 Heating : 52
Exterior dimensions Height x Width x Depth	mm	350 × 1,370 × 650	1,300 × 970 × 370
Exterior appearance (Munsell color)		—	Stucco White (4.2Y7.5/1.1) near equivalent
Net weight	kg	63	105
Refrigerant equipment Compressor type & Q'ty		—	RMT5134MDE2 × 1
Starting method		—	Direct line start
Refrigerant oil	ℓ	—	0.9 (M-MA68)
Heat exchanger		Louver fin & inner grooved tubing	M shape fin & inner grooved tubing
Refrigerant control		—	Electronic expansion valve
Air handling equipment Fan type & Q'ty		Centrifugal fan × 2	Propeller fan × 2
Motor <Starting method>	W	370 < Direct line start >	86 x 2 < Direct line start >
Air flow (Standard)	CMM	Hi : 42 Lo : 33.5	100
External static pressure	Pa	Standard : 60 Max : 130	—
Outdoor air intake		Possible (on return duct)	—
Air filter, Q'ty		Procure locally	—
Shock & vibration absorber		Rubber sleeve (for fan motor)	Rubber sleeve (for Compressor)
Insulation (noise & heat)		Polyurethane form	—
Electric heater	W	—	20 (Crank case heater)
Remote controller		wired : RC-E4 (option) wireless : RCN-KIT3-E (option)	
Room temperature control		Thermostat by electronics	—
Safety equipment		Internal thermostat for fan motor Frost protection thermostat	Internal thermostat for fan motor Abnormal discharge temperature protection.
Installation data Refrigerant piping size	mm	Liquid line : I/U ϕ9.52 (3/8") Pipe ϕ9.52 (3/8") × 0.8 O/U ϕ9.52 (3/8")	
		Gas line : I/U ϕ15.88 (5/8") Pipe ϕ15.88 (5/8") × 1.0 O/U ϕ15.88 (5/8")	
Connecting method		Flare piping	Flare piping
Refrigerant line (one way) length		Max.100m	
Vertical height difference between outdoor unit and indoor unit		Max.30m (Outdoor unit is higher) Max.15m (Outdoor unit is lower)	
Refrigerant Quantity		R410A 4.5kg in outdoor unit (incl. the amount for the piping of : 30m)	
Drain pump		Built-in Drain pump	—
Drain		Hose Connectable with VP20	Holes size ϕ20 × 3pcs
Insulation for piping		Necessary (both Liquid & Gas lines)	
Standard Accessories		Drain hose	Edging

Notes (1) The data are measured at the following conditions.

Item	Indoor air temperature		Outdoor air temperature		External static pressure of indoor unit [Pa]
Operation	DB	WB	DB	WB	
Cooling	27˚C	19˚C	35˚C	24˚C	60
Heating	20˚C		7˚C	6˚C	

(2) This packaged air-conditioner is manufactured and tested in conformity with the ISO.
(3) Sound pressure level indicates the value in an anechoic chamber. During operation these value are somewhat higher due to ambient temperature.
(4) The operation data indicates when the air-conditioner is operated at 230V50Hz
(5) External static pressure can be changed from standard external static pressure (factory setting) to maximum external static pressuer (high static pressure setting) by remote controller.
(6) Value of sound pressure level become increased 5dB(A), when external static pressure is 130Pa.

PJD001Z311

(b) Ceiling cassette-4 way type (FDT)

Models FDT71VD

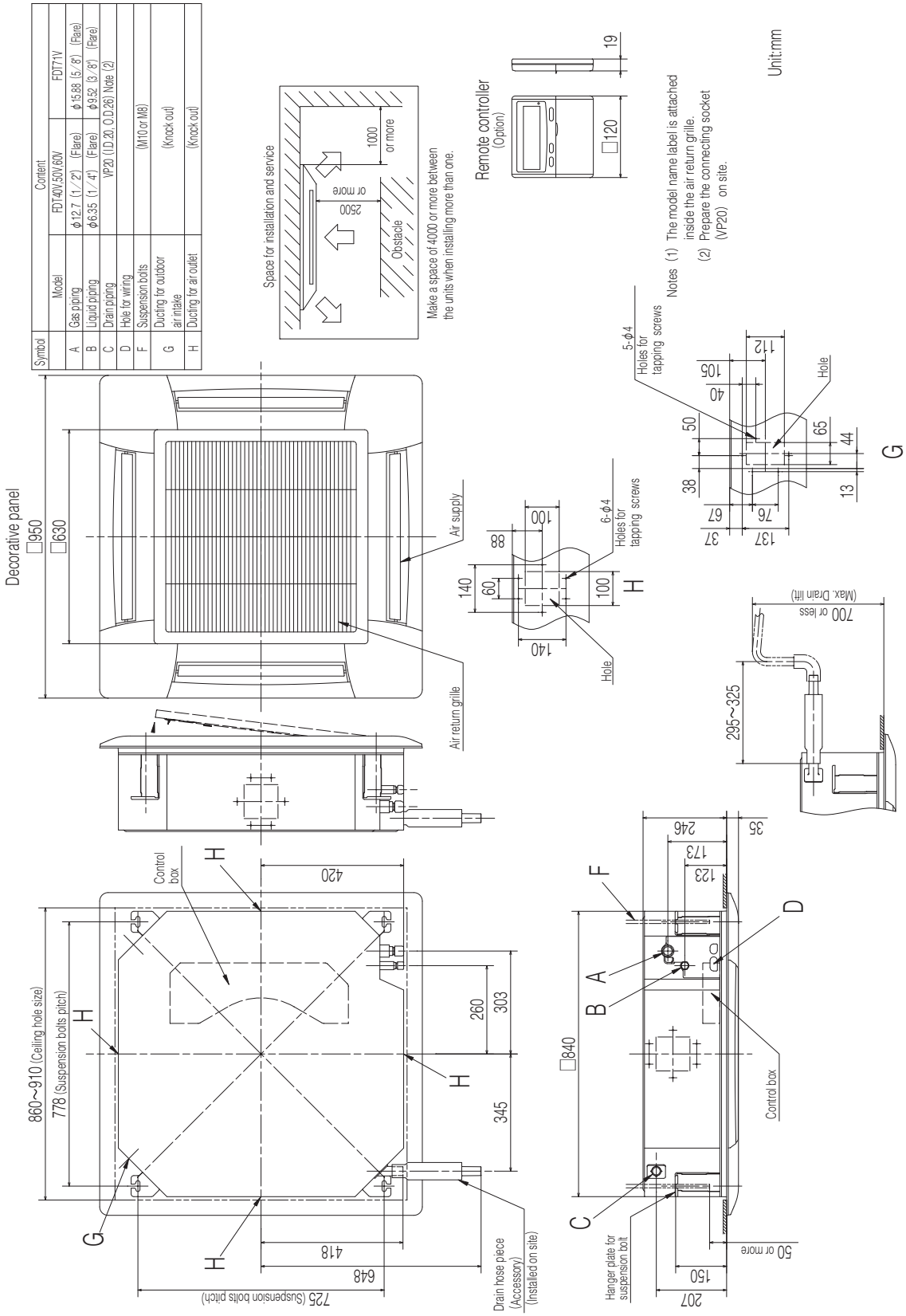

Symbol	Content		
	Model	FDT40V,50V,60V	FDT71V
A	Gas piping	φ12.7 (1/2") (Flare)	φ15.88 (5/8") (Flare)
B	Liquid piping	φ6.35 (1/4") (Flare)	φ9.52 (3/8") (Flare)
C	Drain piping	VP20 (I.D.20, O.D.26) Note (2)	
D	Hole for wiring		
F	Suspension bolts	(M10 or M8)	
G	Ducting for outdoor air intake	(Knock out)	
H	Ducting for air outlet	(Knock out)	

PJF000Z045 C

Models FDT125VD, 140VD

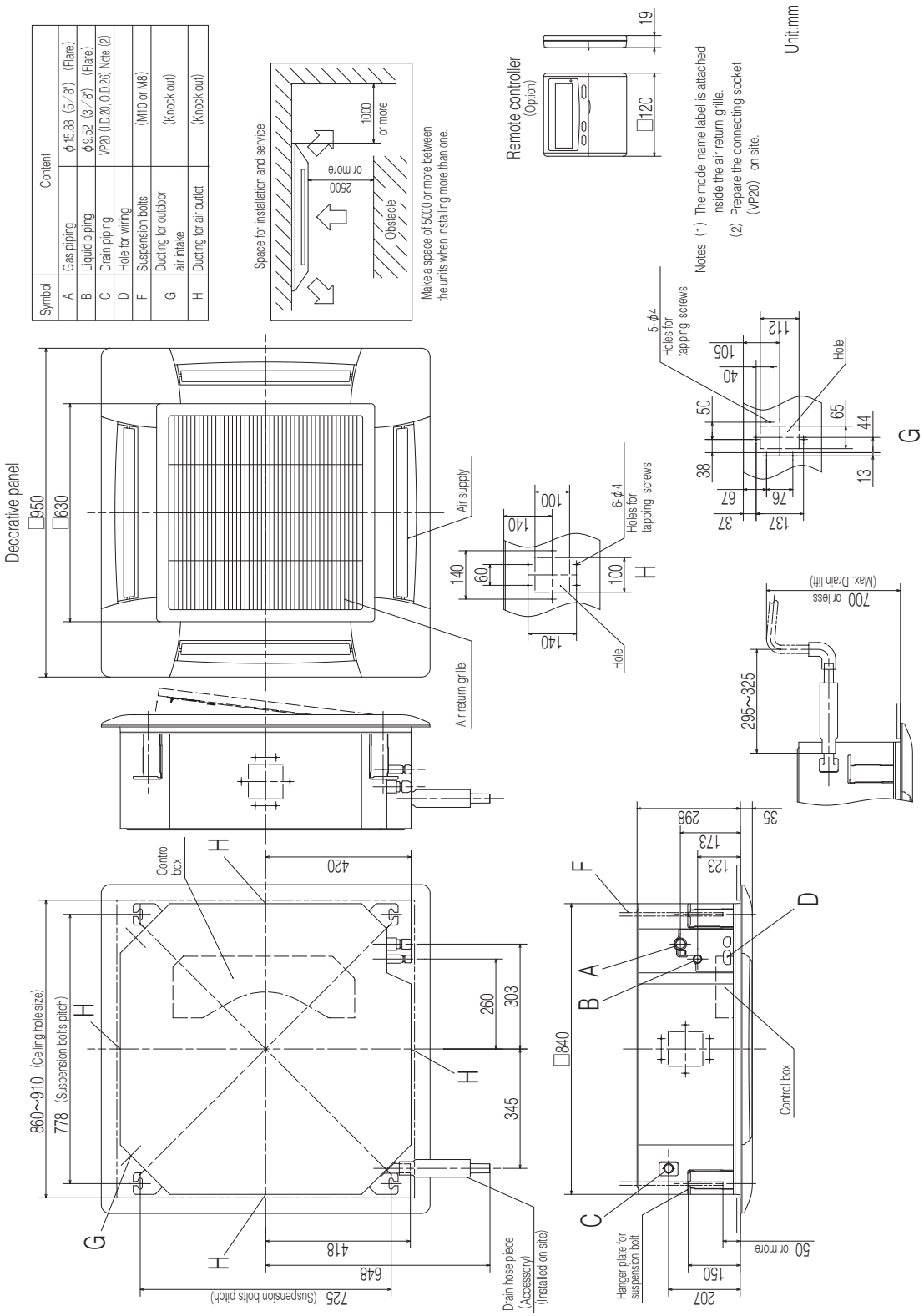

PJF000Z046 b

Models FDEN71VD

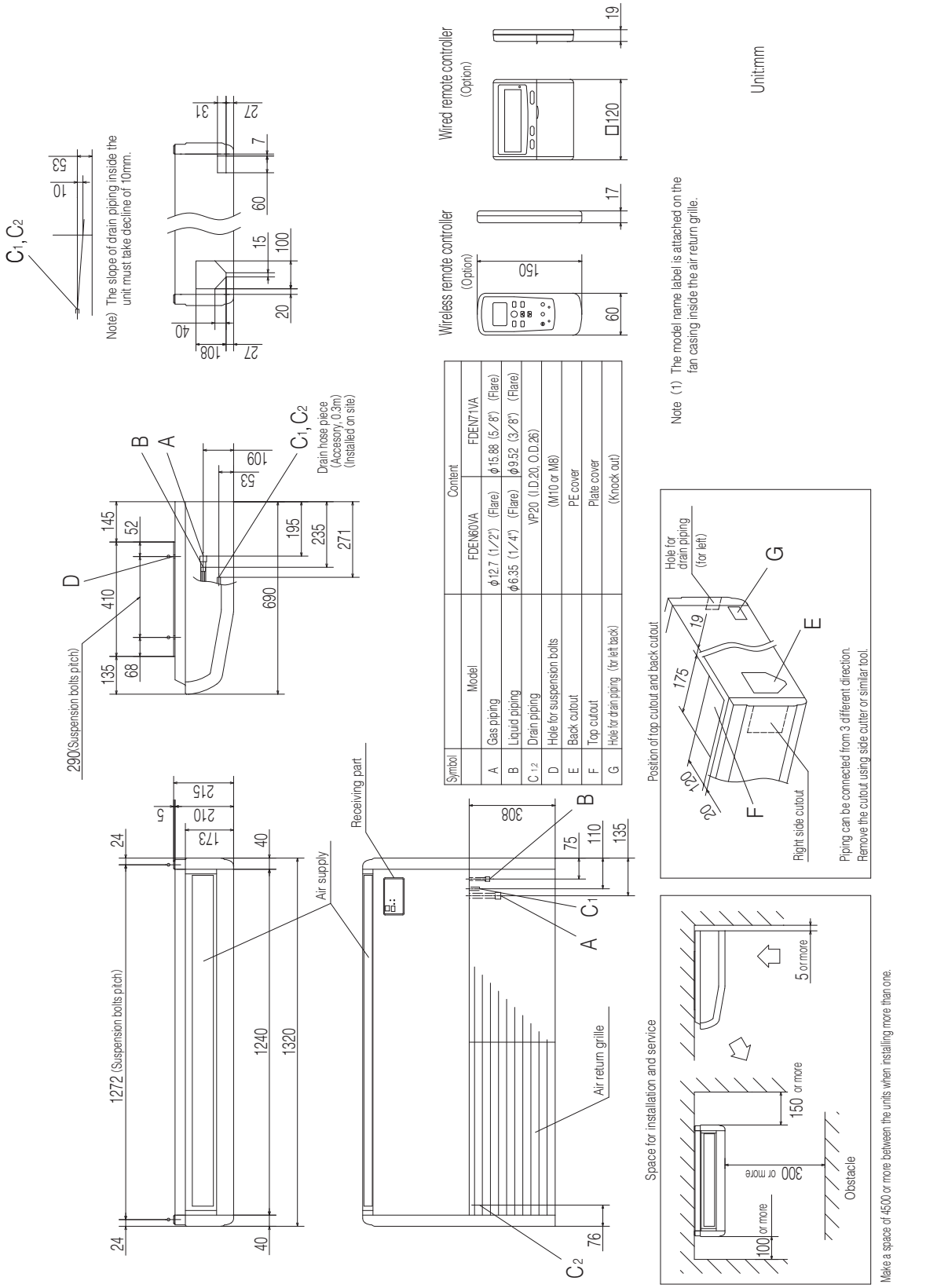

Symbol	Model	Content	
		FDEN60VA	FDEN71VA
A	Gas piping	φ12.7 (1/2") (Flare)	φ15.88 (5/8") (Flare)
B	Liquid piping	φ6.35 (1/4") (Flare)	φ9.52 (3/8") (Flare)
C 1,2	Drain piping	VP20 (I.D.20, O.D.26)	
D	Hole for suspension bolts	(M10 or M8)	
E	Back cutout	PE cover	
F	Top cutout	Plate cover	
G	Hole for drain piping (for left back)	(Knock out)	

PFA003Z817 b

Models FDEN125VD, 140VD

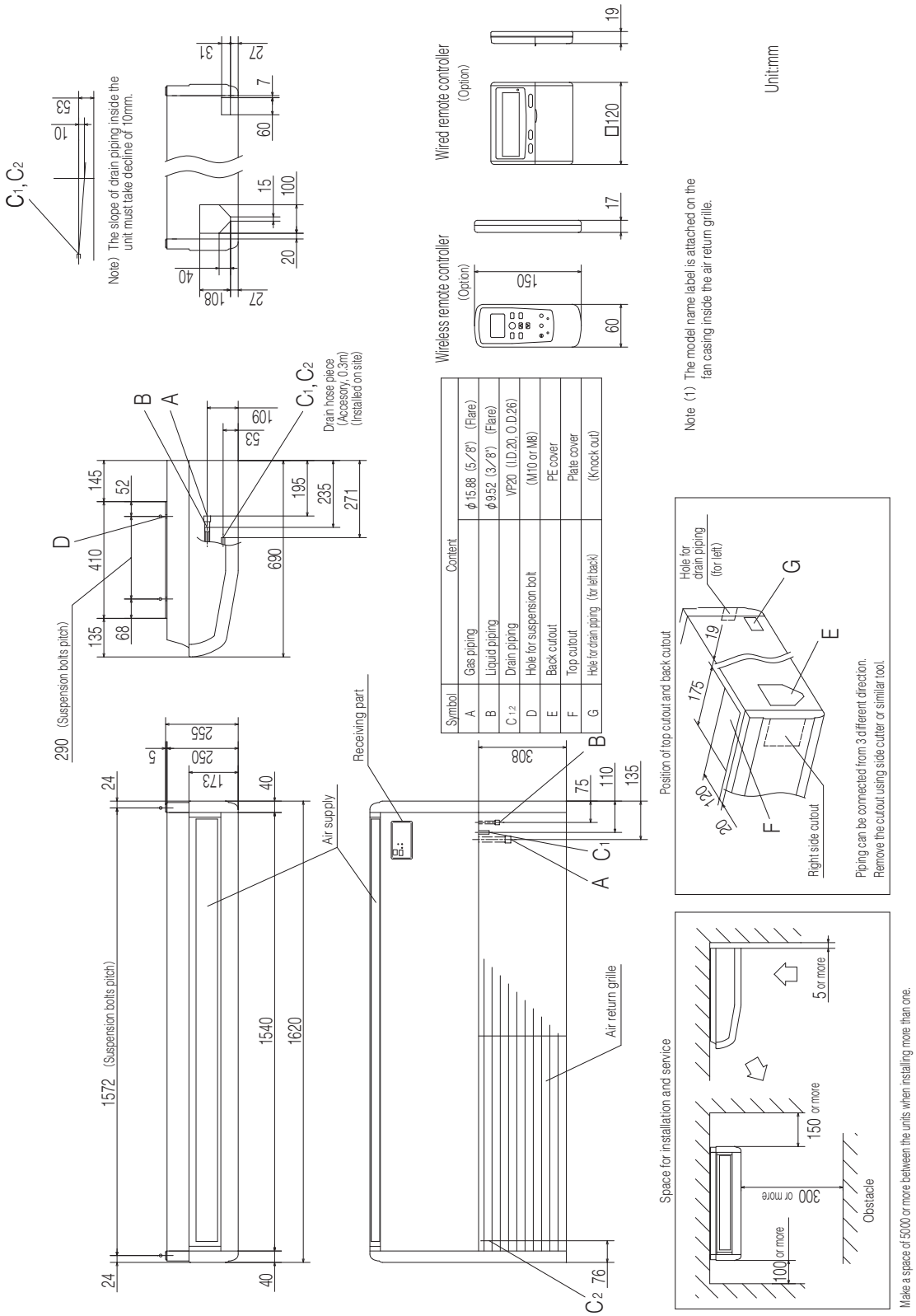

Symbol	Content	
A	Gas piping	φ15.88 (5/8") (Flare)
B	Liquid piping	φ9.52 (3/8") (Flare)
C 1/2	Drain piping	VP20 (I.D.20, O.D.26)
D	Hole for suspension bolt	(M10 or M8)
E	Back cutout	PE cover
F	Top cutout	Plate cover
G	Hole for drain piping (for left back)	(Knock out)

PFA003Z818 b

(e) Duct connected-High static pressure type (FDU)

Model FDU71VD

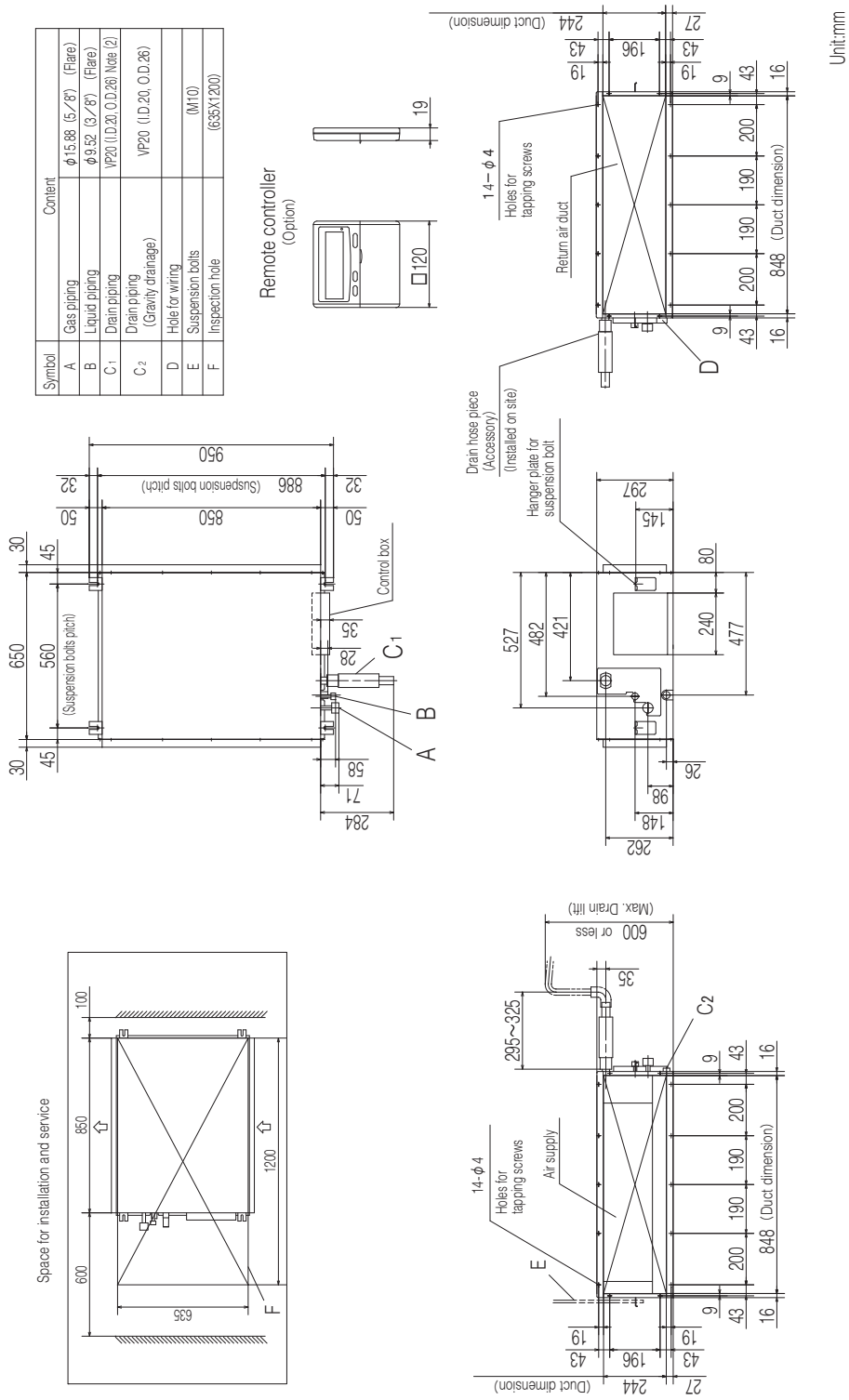

Notes (1) The model name label is attached on the lid of the control box.
(2) Prepare the connecting socket (VP20) on site.

PJD001Z214 C

Models FDU125VD, 140VD

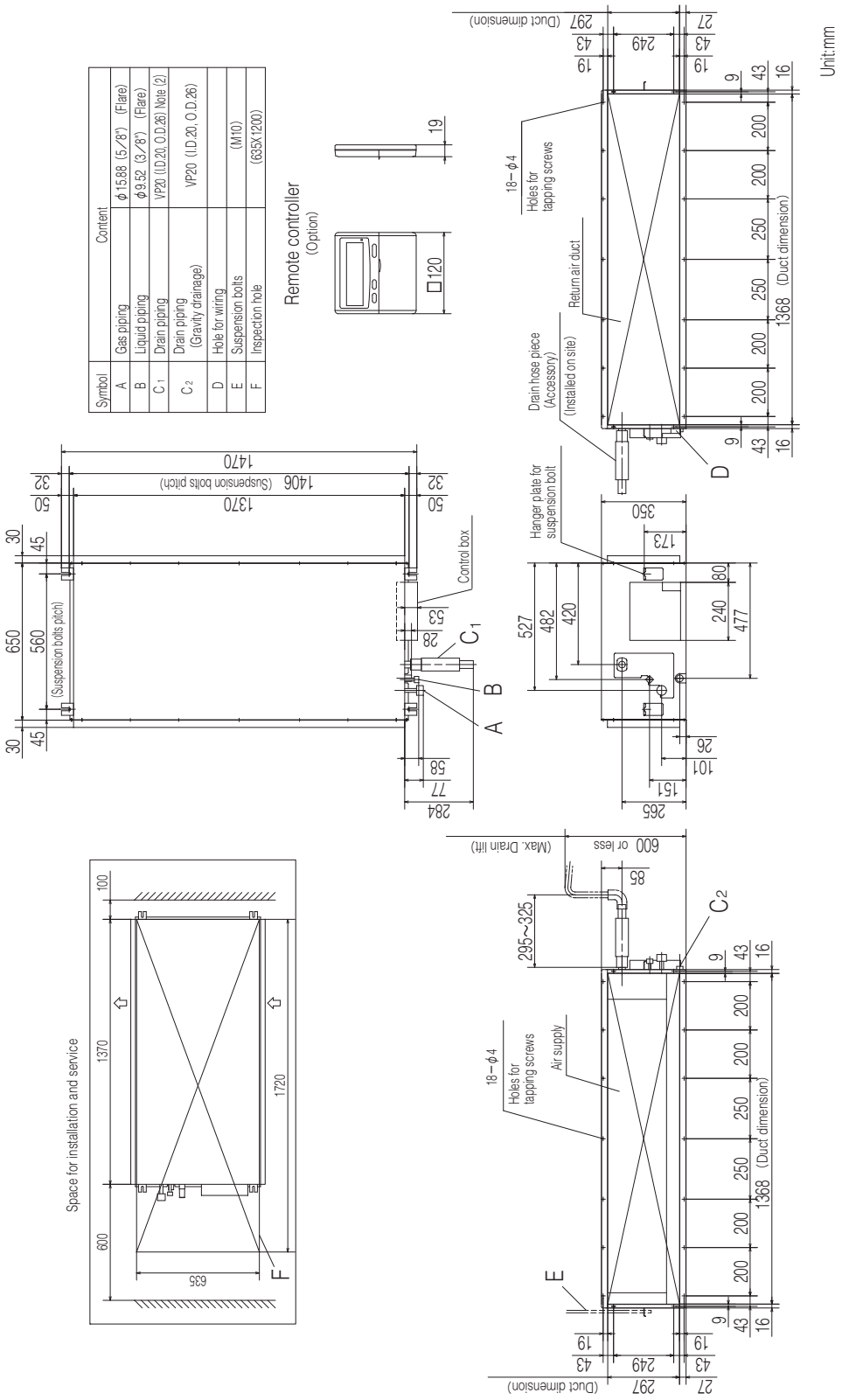

PJD001Z215 C

(2) Outdoor units

Model FDC71VNX

Notes

(1) It must not be surrounded by walls on the four sides.
(2) The unit must be fixed with anchor bolts. An anchor bolt must not protrude more the 15mm.
(3) Where the unit is subject to strong winds, lay it in such a direction that the blower outlet faces perpendicularly to the dominant wind direction.
(4) Leave 1m or more space above the unit.
(5) A wall in front of the blower outlet must not exceed the units height.
(6) The model name label is attached on the lower right corner of the front panel.

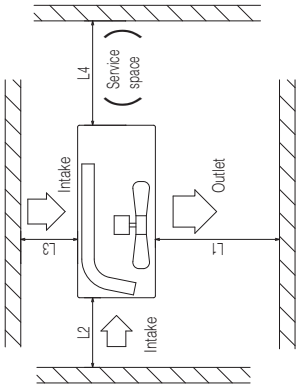

Minimum installation space

Examples of installation / Dimensions	I	II	III
L1	Open	Open	500
L2	300	250	Open
L3	100	150	100
L4	250	250	250

Unit:mm

Symbol	Content	
A	Service valve connection (gas side)	φ15.88 (5/8") (Flare)
B	Service valve connection (liquid side)	φ9.52 (3/8") (Flare)
C	Pipe/cable draw-out hole	
D	Drain discharge hole	φ20 × 3places
E	Anchor bolt hole	M10 × 4places

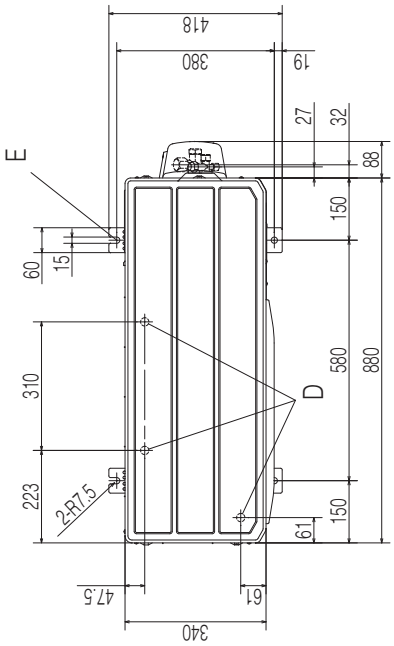

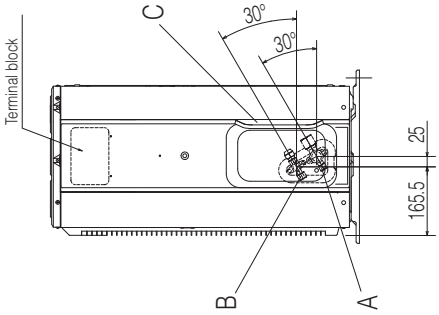

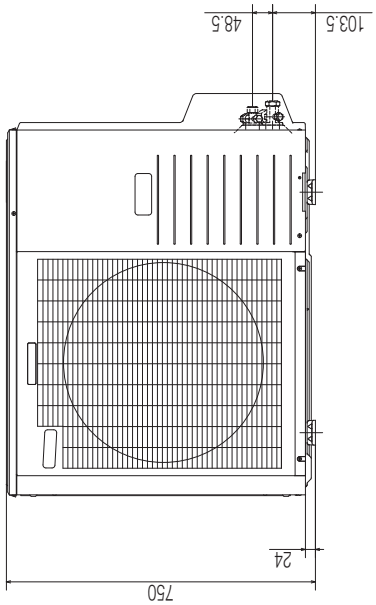

PCA001Z603

Models FDC125VNX, 140VNX

Symbol	Content	
A	Service valve connection of the attached connecting pipe (gas side)	φ15.88 (5/8") (Flare)
B	Service valve connection (liquid side)	φ9.52 (3/8") (Flare)
C	Pipe / cable drawout hole	φ20 x 3places
D	Drain discharge hole	
E	Anchor bolt hole	M10 x 4places
F	Cable drawout hole	φ30 (front) φ45 (side) φ50 (back)

Notes
(1) It must not be surrounded by walls on the four sides.
(2) The unit must be fixed with anchor bolts. An anchor bolt must not protrude more than 15mm.
(3) Where the unit is subject to strong winds, lay it in such a direction that the blower outlet faces perpendicularly to the dominant wind direction.
(4) Leave 1m or more space above the unit.
(5) A wall in front of the blower outlet must not exceed the units height.
(6) The model name label is attached on the lower right corner of the front panel.
(7) Connect the Service valve with local pipe by using the pipe of the attachment. (Gas side only)

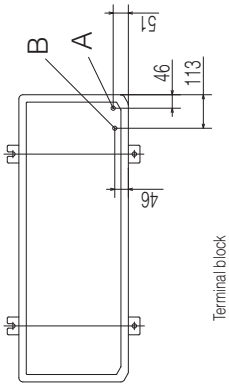

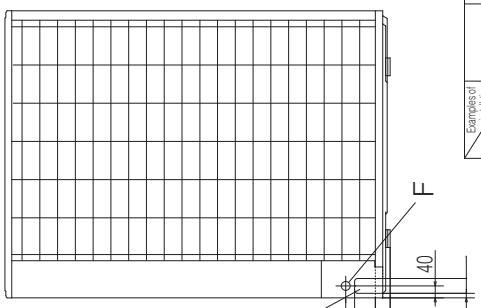

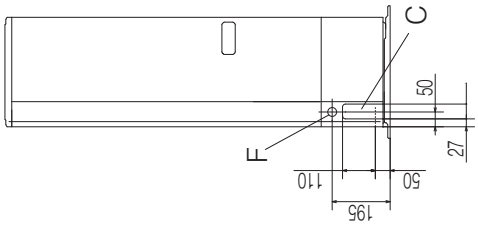

Examples of installation / Dimensions	I	II	III
L1	Open	Open	500
L2	300	5	Open
L3	150	300	150
L4	5	5	5

Unit:mm

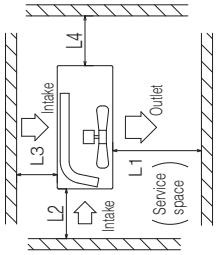

Minimum installation space

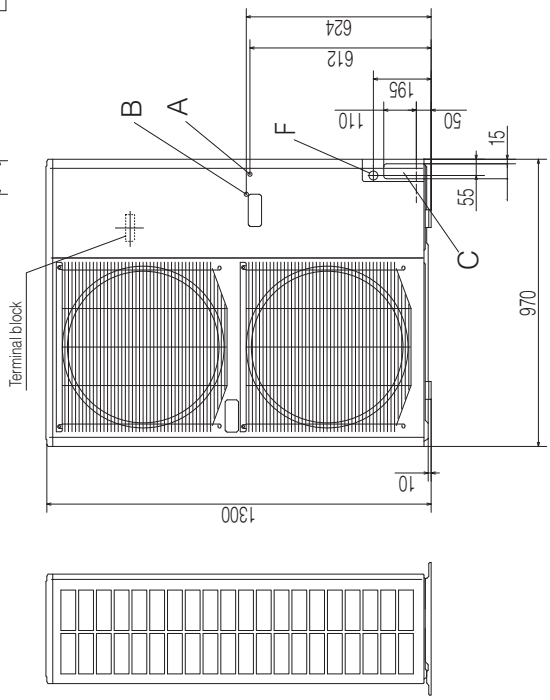

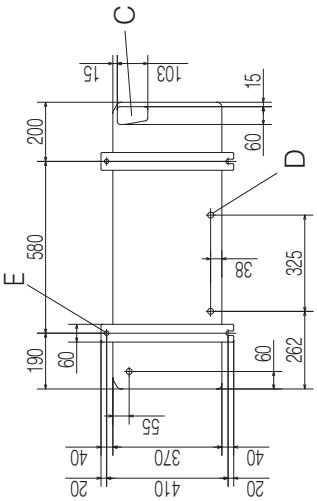

PCA001Z569 A

(b) Ceiling cassette-4 way type (FDT)

Models FDT71VD, 125VD, 140VD

CN8~Z	Connector
DM	Drain motor
F200~203	Fuse
FMI	Fan motor
FS	Float switch
LED・2	Indication lamp (Green-Normal operation)
LED・3	Indication lamp (Red-Inspection)
LM1~4	Louver motor
PS	Panel switch
SW2	Remote controller communication address
SW5	Plural units Master/Slave setting
SW6	Model capacity setting
SW7-1	Operation check, Drain motor test run
TB1	Terminal block (Power source) (□mark)
TB2	Terminal block (Signal line) (□mark)
Th c	Thermistor (Remote controller)
Thl -A	Thermistor (Return air)
Thl -R1,2,3	Thermistor (Heat exchanger)
X4	Relay for DM
■mark	Closed-end connector

Color Marks

Mark	Color	Mark	Color
BK	Black	RD	Red
BL	Blue	WH	White
BR	Brown	Y	Yellow
OR	Orange	Y/GN	Yellow/Green

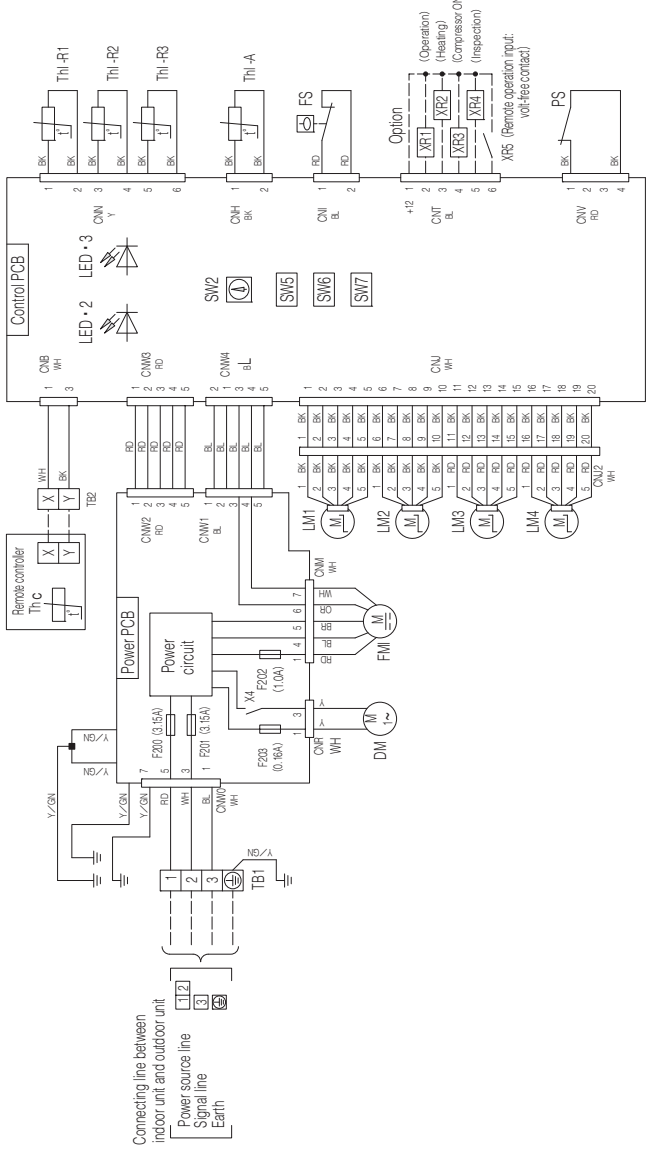

Notes 1. – – –: indicates wiring on site.
2. See the wiring diagram of outside unit about the line between inside unit and outside unit.
3. Use twin core cable (0.3mm² X2) at remote controller line. See spec sheet of remote controller in case that the total length is more than 100m.
4. Do not put remote controller line alongside power source line.

PJF000Z190

Models FDEN71VD, 125VD, 140VD

CFI 1,2	Capacitor for FMI
CNB~Z	Connector
F	Fuse
FMI 1,2	Fan motor (with thermostat)
LED・2	Indication lamp (Green-Normal operation)
LED・3	Indication lamp (Red-Inspection)
LM	Louver motor
SW2	Remote controller communication address
SW5	Plural units Master／Slave setting
SW6	Model capacity setting
SW7-1	Operation check, Drain motor test run
TB1	Terminal block (Power source) (□mark)
TB2	Terminal block (Signal line) (□mark)
Thc	Thermistor (Remote controller)
Thl -A	Thermistor (Return air)
Thl -R1,2,3	Thermistor (Heat exchanger)
Trl	Transformer
X1~3,6	Relay for FM
X4	Relay for DM
■mark	Closed-end connector

Color Marks

Mark	Color	Mark	Color
BK	Black	RD	Red
BL	Blue	WH	White
BR	Brown	Y	Yellow
OR	Orange	Y／GN	Yellow／Green
P	Pink		

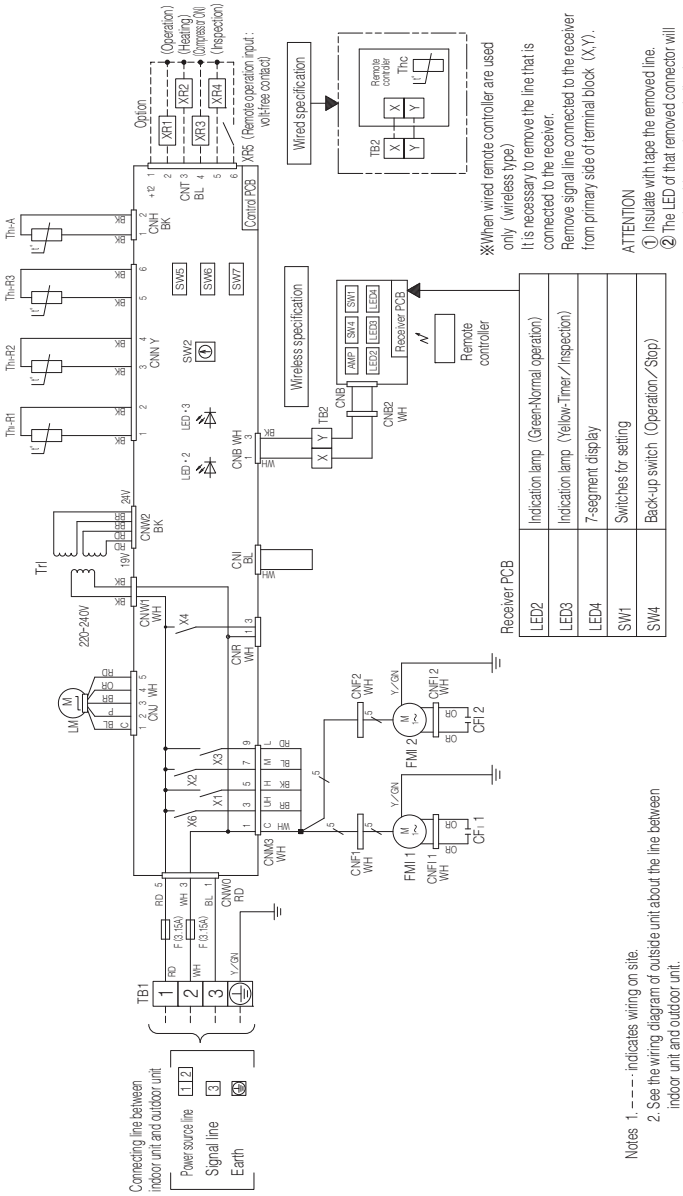

PFA003Z820 B

(e) Duct connected-High static pressure type (FDU)

Model FDU71VD

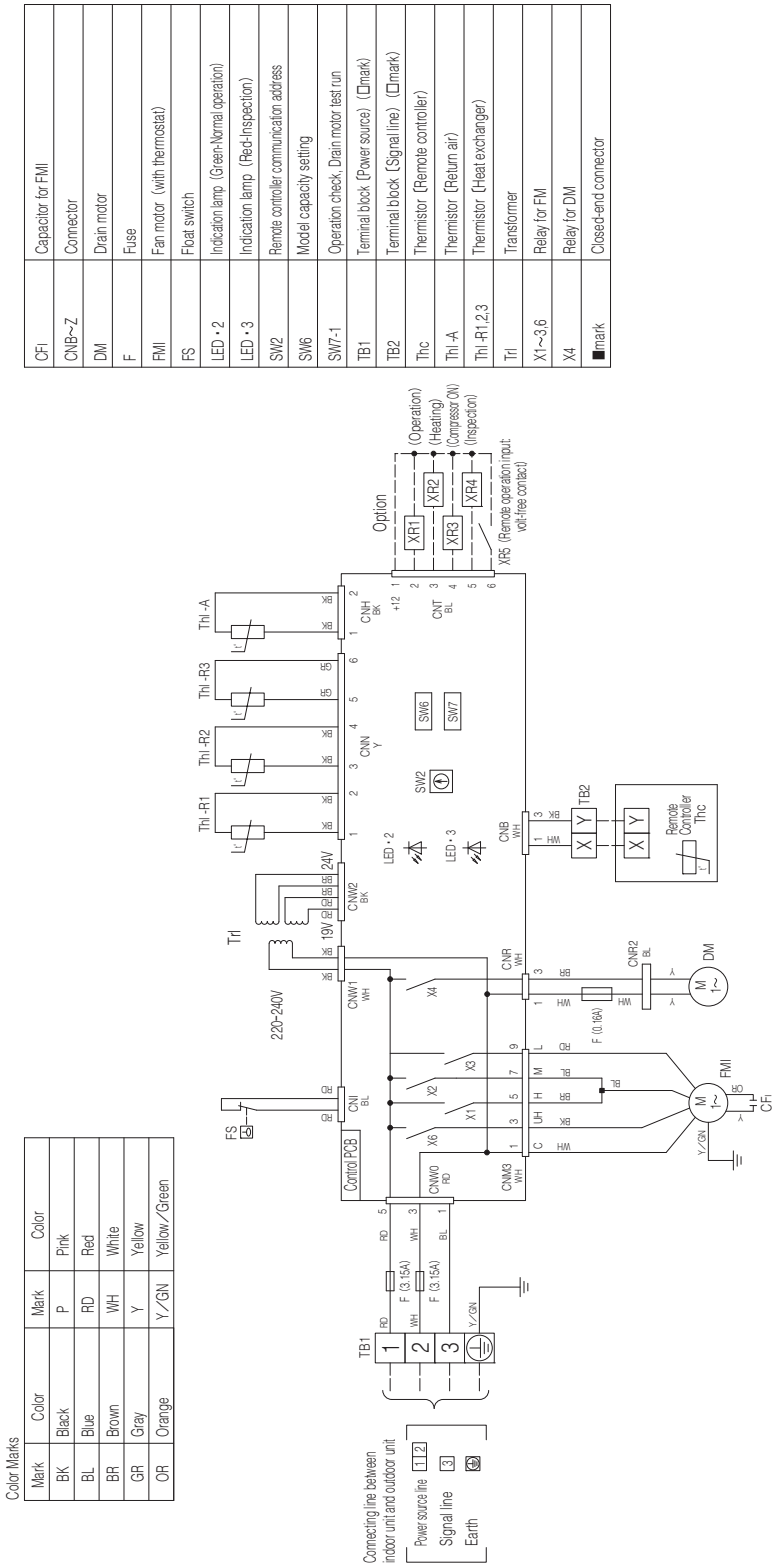

Notes 1. - - - - indicates wiring on site.
2. See the wiring diagram of outside unit about the line between inside unit and outside unit.
3. Use twin core cable (0.3mm² X2) at remote controller line. See spec sheet of remote controller in case that the total length is more than 100m.
4. Do not put remote controller line alongside power source line.

PJD001Z304

Models FDU125VD, 140VD

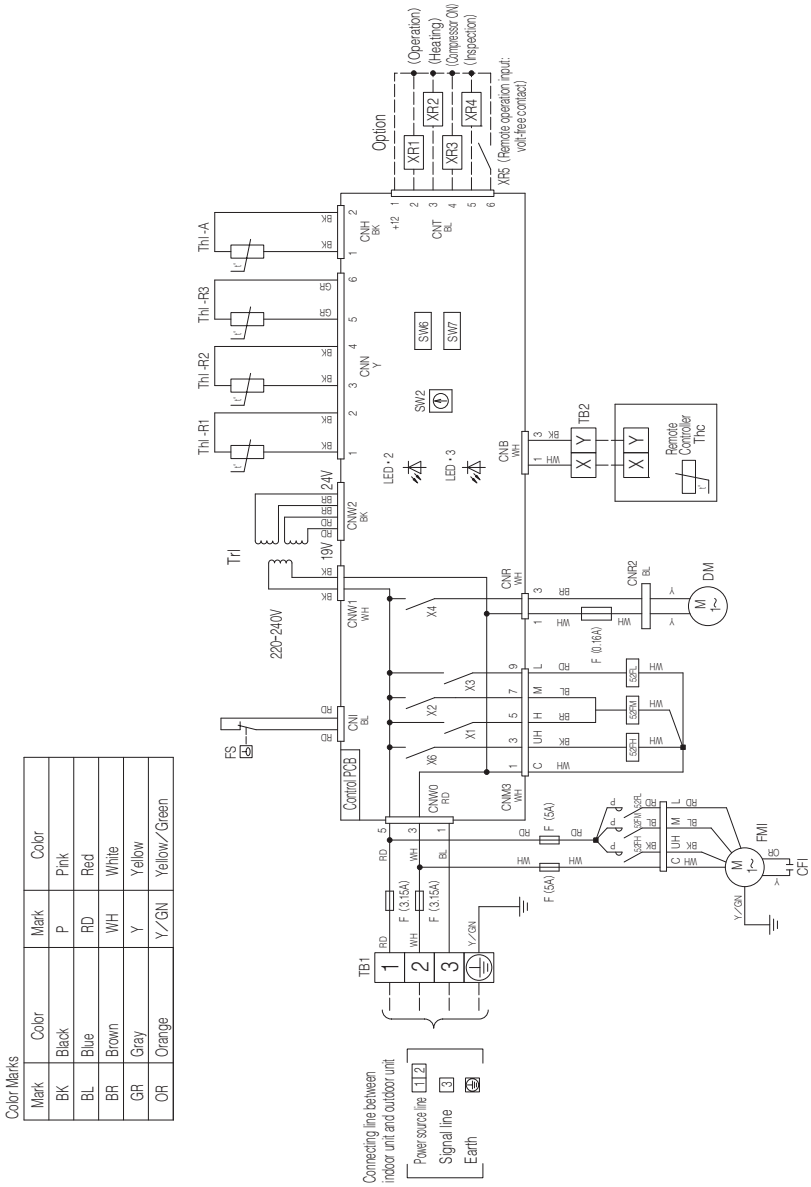

CFI	Capacitor for FMI
CNB~Z	Connector
DM	Drain motor
F	Fuse
FMI	Fan motor (with thermostat)
FS	Float switch
LED・2	Indication lamp (Green-Normal operation)
LED・3	Indication lamp (Red-Inspection)
SW2	Remote controller communication address
SW6	Model capacity setting
SW7-1	Operation check, Drain motor test run
TB1	Terminal block (Power source) (□mark)
TB2	Terminal block (Signal line) (□mark)
Thc	Thermistor (Remote controller)
Thl-A	Thermistor (Return air)
Thl-R1,2,3	Thermistor (Heat exchanger)
Trl	Transformer
X1~3,6	Relay for FM
X4	Relay for DM
■mark	Closed-end connector
52FL,FM,FH	Electromagnetic contactor for FMI

Color Marks

Mark	Color	Mark	Color
BK	Black	P	Pink
BL	Blue	RD	Red
BR	Brown	WH	White
GR	Gray	Y	Yellow
OR	Orange	Y/GN	Yellow/Green

Notes 1. – – – indicates wiring on site.
2. See the wiring diagram of outside unit about the line between inside unit and outside unit.
3. Use twin core cable (0.3mm²X2) at remote controller line. See spec sheet of remote controller in case that the total length is more than 100m.
4. Do not put remote controller line alongside power source line.

PJD001Z217 B

(2) Outdoor units
Model FDC71VNX

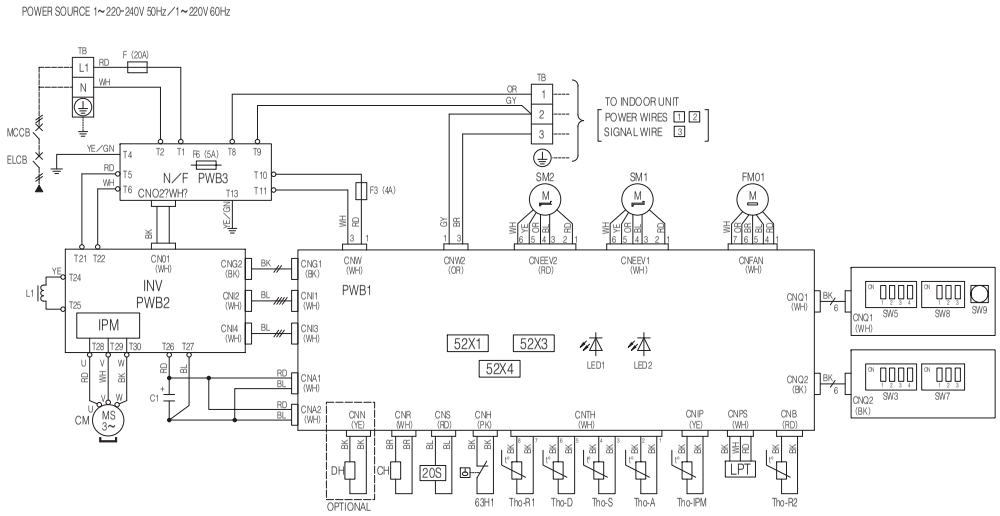

Mark	Color
BK	Black
BL	Blue
BR	Brown
OR	Orange
RD	Red
WH	White
YE	Yellow
YE/GN	Yellow/Green
GY	Gray
PK	Pink

Item	Description
CM	Compressor motor
FM01	Fan motor
CH	Crankcase heater
DH	Drain pan heater
52X1	Auxilliary relay (for CH)
52X3	Auxilliary relay (for 20S)
52X4	Auxilliary relay (for DH)
20S	Solenoid valve for 4 way valve
SM1	Expansion valve for cooling
SM2	Expansion valve for heating
63H1	High pressure switch
Tho-A	Thermistor (Outdoor air temp.)
Tho-D	Thermistor (Discharge pipe temp.)
Tho-R1,R2	Thermistor (Heat exchanger temp.)
Tho-S	Thermistor (Suction pipe temp.)
Tho-IPM	Thermistor (IPM)
LPT	Low pressure sensor
IPM	Intelligent power module
TB	Terminal block
F,F3	Fuse
CnA~Z	Connector
SW9	Pump down switch
SW3,5	Local setting switch
LED1	Indication lamp (GREEN)
LED2	Indication lamp (RED)
L1	Reactor

Power cable, indoor-outdoor connecting wires

Model	MAX over current (A)	Power cable size (mm^2)	Power cable length (m)	indoor-outdoor wire size x number (mm)	Earth wire size (mm)
71	17	3.5	21	ϕ1.6mm x 3	ϕ1.6mm

- The specifications shown in the above table are for units without heaters. For units with heaters, refer to the installation instructions or the construction instructions of the indoor unit.
- Switchgear of Circuit breaker capacity which is calculated from MAX. over current should be chosen along the regulations in each country.
- The cable specifications are based on the assumption that a metal or plastic conduit is used with no more than three cables contained in a conduit and a voltage drop is 2%. For an installation falling outside of these conditions, please follow the internal cabling regulations. Adapt it to the regulation in effect in each country.
- Refer to installation manual or technical manual about usage of local setting switch.
  Don't operate SW3-3,SW5-1,SW5-2,SW7,SW8

Local setting switch SW3, SW5 (Set up at shipment OFF)

SW3-1	Defrost control change	The defrosting operation interval becomes shorter by turning ON this switch. This switch should be turned ON in the area where outside temperature becomes below the freezing point.
SW3-2	Snow guard fan control	When this switch is turned ON, the outdoor unit fan will run for 10 seconds in every 10 minutes, when outdoor temperature falls to 3°C or lower and the compressor is not running when the unit is used in a very snowy country, set this switch to ON.
SW5-3,4	Trial operation	Method of trial operation 1. Trial operation can be performed by using SW5-3. 2. Cooling trial operation will be performed when SW5-4 is OFF, and heating trial operation when SW5-4 is ON. 3. Be sure to turn OFF SW5-3 after the trial operation is finished.

Models FDC125VNX, 140VNX

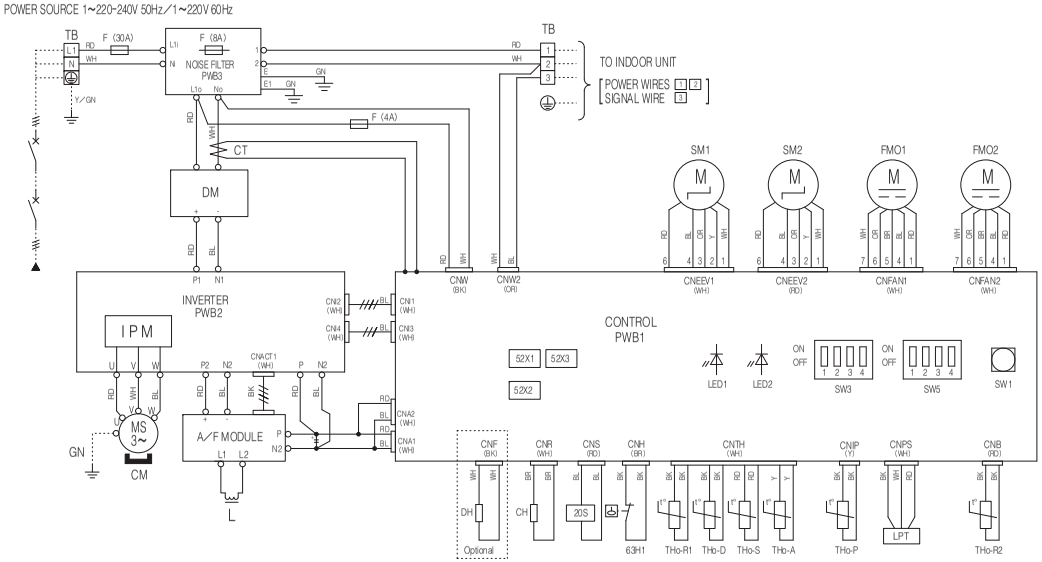

Mark	Color
BK	Black
BL	Blue
BR	Brown
GN	Green
GR	Gray
P	Pink
OR	Orange
RD	Red
WH	White
Y	Yellow
Y/GN	Yellow/Green

Item	Description
CnA~Z	Connector
CH	Crankcase heater
DH	Drain pan heater
CM	Compressor motor
CT	Current sensor
DM	Diode module
F	Fuse
FM01	Fan motor
IPM	Intelligent power module
L	Reactor
LED1	Indication lamp (GREEN)
LED2	Indication lamp (RED)
LPT	Low pressure sensor
SM1	Expansion valve for cooling
SM2	Expansion valve for heating
SW1	Pump down switch
SW3,5	Local setting switch
TB	Terminal block
THo-A	Thermistor (Outdoor air temp.)
THo-D	Thermistor (Discharge pipe temp.)
THo-P	Thermistor (IPM)
THo-R1,2	Thermistor (Heat exchanger pipe temp.)
THo-S	Thermistor (Suction pipe temp.)
20S	Solenoid valve for 4 way valve
52X1	Auxilliary relay (for CH)
52X2	Auxilliary relay (for DH)
52X3	Auxilliary relay (for 20S)
63H1	High pressure switch

Power cable, indoor-outdoor connecting wires

Model	MAX over current (A)	Power cable size (mm^2)	Power cable length (m)	indoor-outdoor wire size x number	Earth wire size (mm)
100	24	5.5	25	ϕ 1.6mm x 3	ϕ 1.6
125	26		23		
140					

※At the connection with the duct type indoor unit.

Model	MAX over current (A)	Power cable size (mm^2)	Power cable length (m)	indoor-outdoor wire size x number	Earth wire size (mm)
100	25	5.5	24	ϕ 1.6mm x 3	ϕ 1.6
125	29	8	31		
140	30		30		

- The specifications shown in the above table are for units without heaters. For units with heaters, refer to the installation instructions or the construction instructions of the indoor unit.
- Switchgear of Circuit breaker capacity which is calculated from MAX. over current should be chosen along the regulations in each country.
- The cable specifications are based on the assumption that a metal or plastic conduit is used with no more than three cables contained in a conduit and a voltage drop is 2%. For an installation falling outside of these conditions, please follow the internal cabling regulations. Adapt it to the regulation in effect in each country.

Local setting switch SW3 (Set up at shipment OFF)

SW3-1	Defrost control change	The defrosting operation interval becomes shorter by turning ON this switch. This switch should be turned ON in the area where outside temperature becomes below the freezing point.
SW3-2	Snow guard fan control	When this switch is turned ON, the outdoor unit fan will run for 30 seconds in every 10 minutes, when outdoor temperature falls to 3℃ or lower and the compressor is not runnning when the unit is used in a very snowy country, set this switch to ON.
SW3-3,4	Trial operation	Method of trial operation ①Trial operation can be performed by using SW3-3,4. ②Compressor will be in the operation when SW3-3 is ON. ③Cooling trial operation will be performed when SW3-4 is OFF, and heating trial operation when SW3-4 is ON. ④Be sure to turn OFF SW3-3 after the trial operation is finished.

PCA001Z570 A

4. RANGE OF USAGE & LIMITATIONS

Operating temperature range		See the next page.
		When used below -5˚C, provide a snow hood to the outdoor unit on site. (option)
Recommendable area to install		Considering to get sufficient heating capacity, the area where the averaged lowest ambient air temperature in day time during winter is above 0˚C, and it has no accumulation of snow.
Installation site		The limitations of installation space are shown in the page for outline drawing. Install the indoor unit at least 2.5m higher than the floor surface.
Temperature and humidity conditions surrounding the indoor unit in the ceiling (Note 2)		Dew point temperature : 28 (23) ˚C or less, relative hummdity : 80% or less (Note 5)
Compressor ON-OFF cycling	Cycle Time	7 minutes or more (from OFF to OFF) or (from ON to ON)
	Stop Time	3 minutes or more
Power source	Voltage range	Rating ±10%
	Voltage drop at start-up	Min.85% of rating
	Phase-to-phase imbalance	3% or less

Note 1. Do not install the unit in places which :
1) Flammable gas may leak.
2) Carbon fiber, metal particles, powder, etc. are floating.
3) Cosmetic or special sprays are used frequently.
4) Exposed to oil splashes or steam (e.g. kitchen and machine plant).
5) Exposed to sea breeze (e.g. coastal area) or calcium chloride (e.g. snow melting agent).
6) Exposed to ammonia substance (e.g. organic fertilizer).
7) Matters affecting devices, such as sulfuric gas, chlorine gas, acid, alkali, etc. may generate or accumulate.
8) Chimney smoke is hanging.
9) Sucking the exhaust gas from heat exchanger.
10) Adjacent to equipment generating electromagnetic waves or high frequency waves.
11) There is light beams that affect the receiving device of indoor unit in case of the wireless specification.
12) Snow falls heavily.
13) At an elevation of 1000 meters or higher.
14) On mobile machine (e.g. vehicle, ship, etc.)
15) Splashed with water to indoor unit (e.g. laundry room).
16) Indoor units of twin and triple specifications separately in a room with partition.

Note 2. If ambient temperature and humidity exceed the above conditions, add polyurethane foam insulation(10mm or thicker) on the outer plate of indoor unit.

Note 3. Both gas and liquid pipes need to be coverd with 20mm or thicker heat insulation materials at the place where humidity exceeds 70%.

Note 4. Do not turn on the power when the outdoor temperature is -15˚C or below at cooling operation.

Note 5. Value in ( ) are for the model FDEN series.

PCA001Z576 a

Operating temperature range

■ **Cooling**

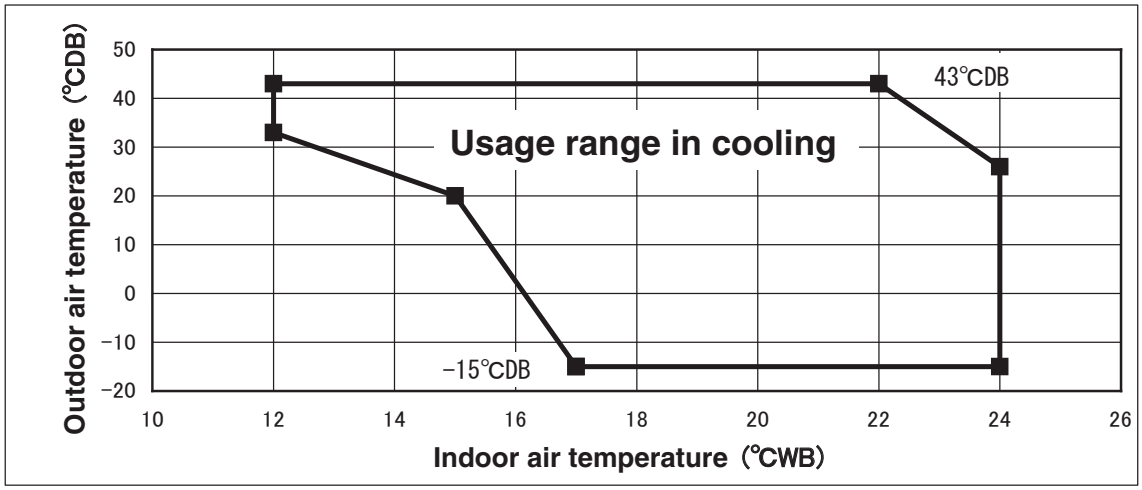

■ **Heating**

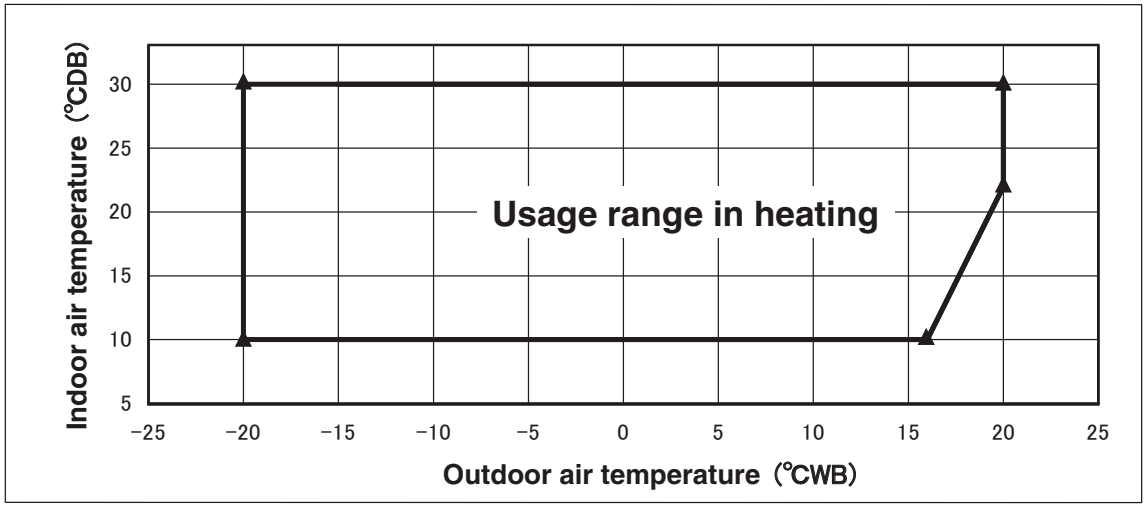

Decline in cooling and heating capacity or operation stop may occur when the outdoor unit is installed in places where natural wind can increase or decrease its design airflow rate.

PCA001Z576 a

"CAUTION" Cooling operation under low outdoor air temperature conditions
PAC models can be operated in cooling mode at low outdoor air temperature condition within above temperature range. However in case of severely low temperature conditions if the following precaution is not observed, it may not be operated in spite of operable temperature range mentioned above and cooling capacity may not be established under certain conditions.

[Precaution]
In case of severely low temperature condition

1) Install the outdoor unit at the place where strong wind cannot blow directly into the outdoor unit.
2) If there is no installation place where can prevent strong wind from directly blowing into the outdoor unit, mount the flex flow adapter (prepared as optional part) or like such devices onto the outdoor unit in order to divert the strong wind.

[Reason]
Under the low outdoor air temperature conditions of -5℃ or lower, the outdoor fan is controlled at lower or lowest speed by outdoor fan control, but if strong wind directly blow into the outdoor unit, the outdoor heat exchanger temperature will drop more.
This makes high and low pressures to drop as well. This low pressure drop makes the indoor heat exchanger temperature to drop and will activate anti-frost control at indoor heat exchanger at frequent intervals, that cooling operation may not be established for any given time.

Limitation on unit and piping installation - single, twin.

Descriptions	Models for outdoor unit		Dimensional limitations	Marks appearing in the drawing	
				Single type	
One-way pipe length	71V		≦ 50m	L	
	125V · 140V		≦ 100m		
Elevation difference between indoor and outdoor unit	When outdoor unit is positioned higher	71V	≦ 30m	H	
		125V · 140V			
	When outdoor unit is positioned lower	71V	≦ 15m	H	
		125V · 140V			

Single type

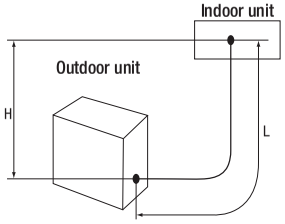

(1) A riser pipe must be part of the main.

(2) Reduce refrigerant amount by according to table below from the factory charge when refrigerant piping is shorter than 3m.

Model for outdoor units	Refrigerant to be reduced
71VNX,125VNX,140VNX	1.0 kg

MITSUBISHI HEAVY INDUSTRIES, LTD.

P: 1300 138 007 W: www.mhiaa.com.au

Because of our policy of continuous improvement, we reserve the right to make changes in all specifications without notice.

© Copyright MITSUBISHI HEAVY INDUSTRIES, LTD.