Manual No. '11 • KX-T-165

MHI

TECHNICAL MANUAL

VRF INVERTER MULTI-SYSTEM AIR CONDITIONERS

Alternative refrigerant R410A use models

(INDOOR UNIT) –KX6 series–

FDUM22KXE6F
FDUM28KXE6F
FDUM36KXE6F
FDUM45KXE6F
FDUM56KXE6F
FDUM71KXE6F
FDUM90KXE6F
FDUM112KXE6F
FDUM140KXE6F
FDUM160KXE6F

Note : Regarding the Outdoor unit series, refer to the manual No.08 • KX-T-117, 09 • KX, KXR-T-135, 09 • KX-T-139, 10 • KX-T-146, 09 • KX-DB-124,127, 09 • KXR • DB-129, 10 • KX • DB-147, 150, 155, 09 • KX • SM-125, 128, 09 • KXR • SM-130, 10 • KX • SM-148, 151,156

MITSUBISHI HEAVY INDUSTRIES, LTD.

CONTENTS

■ How to read the model name

● **Indoor unit**

Example: FDUM 22 KX E 6F

- 6F — Series No.
- E — Application power source...See the specifications
- KX — Multi KX series
- 22 — Nominal capacity (nominal cooling capacity : 2.2kW)
- FDUM — Model name (Duct connected-Low/Middle staic pressure type)

1 SPECIFICATIONS

Models FDUM22KXE6F, 28KXE6F, 36KXE6F, 45KXE6F, 56KXE6F

Models			FDUM22KXE6F	FDUM28KXE6F	FDUM36KXE6F	FDUM45KXE6F	FDUM56KXE6F
Nominal cooling capacity*1		kW	2.2	2.8	3.6	4.5	5.6
Nominal heating capacity*2		kW	2.5	3.2	4.0	5.0	6.3
Power source			220-240V～50Hz / 220V～60Hz	220-240V～50Hz / 220V～60Hz	220-240V～50Hz / 220V～60Hz	220-240V～50Hz / 220V～60Hz	220-240V～50Hz / 220V～60Hz
Power consumption	Cool	kW	0.10 - 0.10 / 0.10	0.10 - 0.10 / 0.10	0.10 - 0.10 / 0.10	0.10 - 0.10 / 0.10	0.10 - 0.10 / 0.10
	Heat	kW	0.10 - 0.10 / 0.10	0.10 - 0.10 / 0.10	0.10 - 0.10 / 0.10	0.10 - 0.10 / 0.10	0.10 - 0.10 / 0.10
Running current	Cool	A	0.46 - 0.42 / 0.46	0.46 - 0.42 / 0.46	0.46 - 0.42 / 0.46	0.46 - 0.42 / 0.46	0.46 - 0.42 / 0.46
	Heat	A	0.46 - 0.42 / 0.46	0.46 - 0.42 / 0.46	0.46 - 0.42 / 0.46	0.46 - 0.42 / 0.46	0.46 - 0.42 / 0.46
Sound Pressure Level		dB(A)	P-Hi : 37 Hi : 32 Me : 29 Lo : 26	P-Hi : 37 Hi : 32 Me : 29 Lo : 26	P-Hi : 37 Hi : 32 Me : 29 Lo : 26	P-Hi : 37 Hi : 32 Me : 29 Lo : 26	P-Hi : 37 Hi : 32 Me : 29 Lo : 26
Exterior dimensions Height x Width x Depth		mm	280 × 750 × 635	280 × 750 × 635	280 × 750 × 635	280 × 750 × 635	280 × 750 × 635
Net weight		kg	29	29	29	29	29
Refrigerant equipment Heat exchanger			Louver fin & inner grooved tubing	Louver fin & inner grooved tubing	Louver fin & inner grooved tubing	Louver fin & inner grooved tubing	Louver fin & inner grooved tubing
Refrigerant control			Electronic Expansion Valve	Electronic Expansion Valve	Electronic Expansion Valve	Electronic Expansion Valve	Electronic Expansion Valve
Air handling equipment Fan type & Q'ty			Centrifugal fan × 1	Centrifugal fan × 1	Centrifugal fan × 1	Centrifugal fan × 1	Centrifugal fan × 1
Motor		W	100	100	100	100	100
Starting method			Direct line start	Direct line start	Direct line start	Direct line start	Direct line start
Air flow (Standard)		CMM	P-Hi : 13 Hi : 10 Me : 9 Lo : 8	P-Hi : 13 Hi : 10 Me : 9 Lo : 8	P-Hi : 13 Hi : 10 Me : 9 Lo : 8	P-Hi : 13 Hi : 10 Me : 9 Lo : 8	P-Hi : 13 Hi : 10 Me : 9 Lo : 8
External static pressure		Pa	100 (at 13 CMM)	100 (at 13 CMM)	100 (at 13 CMM)	100 (at 13 CMM)	100 (at 13 CMM)
Outside air intake			Possible	Possible	Possible	Possible	Possible
Air filter, Q'ty			Procure locally	Procure locally	Procure locally	Procure locally	Procure locally
Shock & vibration absorber			Rubber sleeve (for fan motor)	Rubber sleeve (for fan motor)	Rubber sleeve (for fan motor)	Rubber sleeve (for fan motor)	Rubber sleeve (for fan motor)
Insulation (noise & heat)			Polyurethane form	Polyurethane form	Polyurethane form	Polyurethane form	Polyurethane form
Operation control Operation switch			Remote control switch Option : RC-E5	Remote control switch Option : RC-E5	Remote control switch Option : RC-E5	Remote control switch Option : RC-E5	Remote control switch Option : RC-E5
Room temperature control			Thermostat by electronics	Thermostat by electronics	Thermostat by electronics	Thermostat by electronics	Thermostat by electronics
Safety equipment			Overload protection for fan motor Frost protection thermostat	Overload protection for fan motor Frost protection thermostat	Overload protection for fan motor Frost protection thermostat	Overload protection for fan motor Frost protection thermostat	Overload protection for fan motor Frost protection thermostat
Installation data Refrigerant piping size			Liquid line : ϕ 6.35 (1/4") Gas line : ϕ 9.52 (3/8")	Liquid line : ϕ 6.35 (1/4") Gas line : ϕ 9.52 (3/8")	Liquid line : ϕ 6.35 (1/4") Gas line : ϕ 12.7 (1/2")	Liquid line : ϕ 6.35 (1/4") Gas line : ϕ 12.7 (1/2")	Liquid line : ϕ 6.35 (1/4") Gas line : ϕ 12.7 (1/2")
Connecting method			Flare piping	Flare piping	Flare piping	Flare piping	Flare piping
Refrigerant			R410A	R410A	R410A	R410A	R410A
Drain pump			Built-in Drain pump	Built-in Drain pump	Built-in Drain pump	Built-in Drain pump	Built-in Drain pump
Drain hose			Connectable with VP20 (Standard) or VP25 (used with attached socket)	Connectable with VP20 (Standard) or VP25 (used with attached socket)	Connectable with VP20 (Standard) or VP25 (used with attached socket)	Connectable with VP20 (Standard) or VP25 (used with attached socket)	Connectable with VP20 (Standard) or VP25 (used with attached socket)
Insulation for piping			Necessary (both Liquid & Gas line)	Necessary (both Liquid & Gas line)	Necessary (both Liquid & Gas line)	Necessary (both Liquid & Gas line)	Necessary (both Liquid & Gas line)
Accessories			Drain hose	Drain hose	Drain hose	Drain hose	Drain hose

Notes (1) The data are measured at the following conditions.

Adapted to **RoHS** directive

Item	Indoor air temperature		Outdoor air temperature		Standards	External static pressure of indoor unit
Operation	DB	WB	DB	WB		Pa
Cooling	27℃	19℃	35℃	24℃	ISO-T1	35
Heating	20℃		7℃	6℃		

(2) This packaged air-conditioner is manufactured and tested in conformity with the following standard. ISO-T1 "UNITARY AIR-CONDITIONERS"
(3) Initial static pressure values of optional air filter "UM-FL1EF" are 5Pa.
(4) When wireless remote controller is used, fan is 3 speed setting (Hi-Me-Lo) only.

PJG000Z015

'11 • KX-T-165

Models			FDUM71KXE6F	FDUM90KXE6F	FDUM112KXE6F	FDUM140KXE6F	FDUM160KXE6F
Nominal cooling capacity*1		kW	7.1	9.0	11.2	14.0	16.0
Nominal heating capacity*2		kW	8.0	10.0	12.5	16.0	18.0
Power source			220-240V～50Hz / 220V～60Hz	220-240V～50Hz / 220V～60Hz	220-240V～50Hz / 220V～60Hz	220-240V～50Hz / 220V～60Hz	220-240V～50Hz / 220V～60Hz
Power consumption	Cool	kW	0.20 - 0.20 / 0.20	0.20 - 0.20 / 0.20	0.29 - 0.29 / 0.29	0.33 - 0.33 / 0.33	0.45 - 0.45 / 0.45
	Heat		0.20 - 0.20 / 0.20	0.20 - 0.20 / 0.20	0.29 - 0.29 / 0.29	0.33 - 0.33 / 0.33	0.45 - 0.45 / 0.45
Running current	Cool	A	0.91 - 0.83 / 0.91	0.91 - 0.83 / 0.91	1.32 - 1.21 / 1.32	1.50 - 1.38 / 1.50	2.05 - 1.88 / 2.05
	Heat		0.91 - 0.83 / 0.91	0.91 - 0.83 / 0.91	1.32 - 1.21 / 1.32	1.50 - 1.38 / 1.50	2.05 - 1.88 / 2.05
Sound Pressure Level		dB(A)	P-Hi : 38 Hi : 33 Me : 29 Lo : 25	P-Hi : 38 Hi : 33 Me : 29 Lo : 25	P-Hi : 44 Hi : 38 Me : 36 Lo : 30	P-Hi : 45 Hi : 40 Me : 34 Lo : 29	P-Hi : 47 Hi : 40 Me : 35 Lo : 30
Exterior dimensions Height x Width x Depth		mm	280 × 950 × 635	280 × 950 × 635	280 × 1,370 × 740	280 × 1,370 × 740	280 × 1,370 × 740
Net weight		kg	34	34	54	54	54
Refrigerant equipment Heat exchanger			Louver fin & inner grooved tubing	Louver fin & inner grooved tubing	Louver fin & inner grooved tubing	Louver fin & inner grooved tubing	Louver fin & inner grooved tubing
Refrigerant control			Electronic Expansion Valve	Electronic Expansion Valve	Electronic Expansion Valve	Electronic Expansion Valve	Electronic Expansion Valve
Air handling equipment Fan type & Q'ty			Centrifugal fan × 2	Centrifugal fan × 2	Centrifugal fan × 3	Centrifugal fan × 3	Centrifugal fan × 3
Motor		W	130	130	100 + 130	100 + 200	100 + 200
Starting method			Direct line start	Direct line start	Direct line start	Direct line start	Direct line start
Air flow (Standard)		CMM	P-Hi : 24 Hi : 19 Me : 15 Lo : 10	P-Hi : 24 Hi : 19 Me : 15 Lo : 10	P-Hi : 36 Hi : 28 Me : 25 Lo : 19	P-Hi : 39 Hi : 32 Me : 26 Lo : 20	P-Hi : 48 Hi : 35 Me : 28 Lo : 22
External static pressure		Pa	100 (at 24 CMM)	100 (at 24 CMM)	100 (at 36 CMM)	100 (at 39 CMM)	100 (at 48 CMM)
Outside air intake			Possible	Possible	Possible	Possible	Possible
Air filter, Q'ty			Procure locally	Procure locally	Procure locally	Procure locally	Procure locally
Shock & vibration absorber			Rubber sleeve (for fan motor)	Rubber sleeve (for fan motor)	Rubber sleeve (for fan motor)	Rubber sleeve (for fan motor)	Rubber sleeve (for fan motor)
Insulation (noise & heat)			Polyurethane form	Polyurethane form	Polyurethane form	Polyurethane form	Polyurethane form
Operation control Operation switch			Remote control switch Option : RC-E5	Remote control switch Option : RC-E5	Remote control switch Option : RC-E5	Remote control switch Option : RC-E5	Remote control switch Option : RC-E5
Room temperature control			Thermostat by electronics	Thermostat by electronics	Thermostat by electronics	Thermostat by electronics	Thermostat by electronics
Safety equipment			Overload protection for fan motor Frost protection thermostat	Overload protection for fan motor Frost protection thermostat	Overload protection for fan motor Frost protection thermostat	Overload protection for fan motor Frost protection thermostat	Overload protection for fan motor Frost protection thermostat
Installation data Refrigerant piping size			Liquid line : ϕ 9.52 (3/8") Gas line : ϕ 15.88 (5/8")	Liquid line : ϕ 9.52 (3/8") Gas line : ϕ 15.88 (5/8")	Liquid line : ϕ 9.52 (3/8") Gas line : ϕ 15.88 (5/8")	Liquid line : ϕ 9.52 (3/8") Gas line : ϕ 15.88 (5/8")	Liquid line : ϕ 9.52 (3/8") Gas line : ϕ 15.88 (5/8")
Connecting method			Flare piping	Flare piping	Flare piping	Flare piping	Flare piping
Refrigerant			R410A	R410A	R410A	R410A	R410A
Drain pump			Built-in Drain pump	Built-in Drain pump	Built-in Drain pump	Built-in Drain pump	Built-in Drain pump
Drain hose			Connectable with VP20 (Standard) or VP25 (used with attached socket)	Connectable with VP20 (Standard) or VP25 (used with attached socket)	Connectable with VP20 (Standard) or VP25 (used with attached socket)	Connectable with VP20 (Standard) or VP25 (used with attached socket)	Connectable with VP20 (Standard) or VP25 (used with attached socket)
Insulation for piping			Necessary (both Liquid & Gas line)	Necessary (both Liquid & Gas line)	Necessary (both Liquid & Gas line)	Necessary (both Liquid & Gas line)	Necessary (both Liquid & Gas line)
Accessories			Drain hose	Drain hose	Drain hose	Drain hose	Drain hose

Notes (1) The data are measured at the following conditions.

Adapted to **RoHS** directive

Item	Indoor air temperature		Outdoor air temperature		Standards	External static pressure of indoor unit
Operation	DB	WB	DB	WB		Pa
Cooling	27℃	19℃	35℃	24℃	ISO-T1	35 (FDUM71, 90KXE6F)
Heating	20℃		7℃	6℃		60 (FDUM112-160KXE6F)

(2) This packaged air-conditioner is manufactured and tested in conformity with the following standard. ISO-T1 "UNITARY AIR-CONDITIONERS"
(3) Initial static pressure values of optional air filter "UM-FL2EF,3EF" are 5Pa.
(4) When wireless remote controller is used, fan is 3 speed setting(Hi-Me-Lo) only.

PJG000Z015

'11 • KX-T-165

2 EXTERIOR DIMENSIONS

2.1 Indoor units

Models FDUM22KXE6F, 28KXE6F, 36KXE6F, 45KXE6F, 56KXE6F

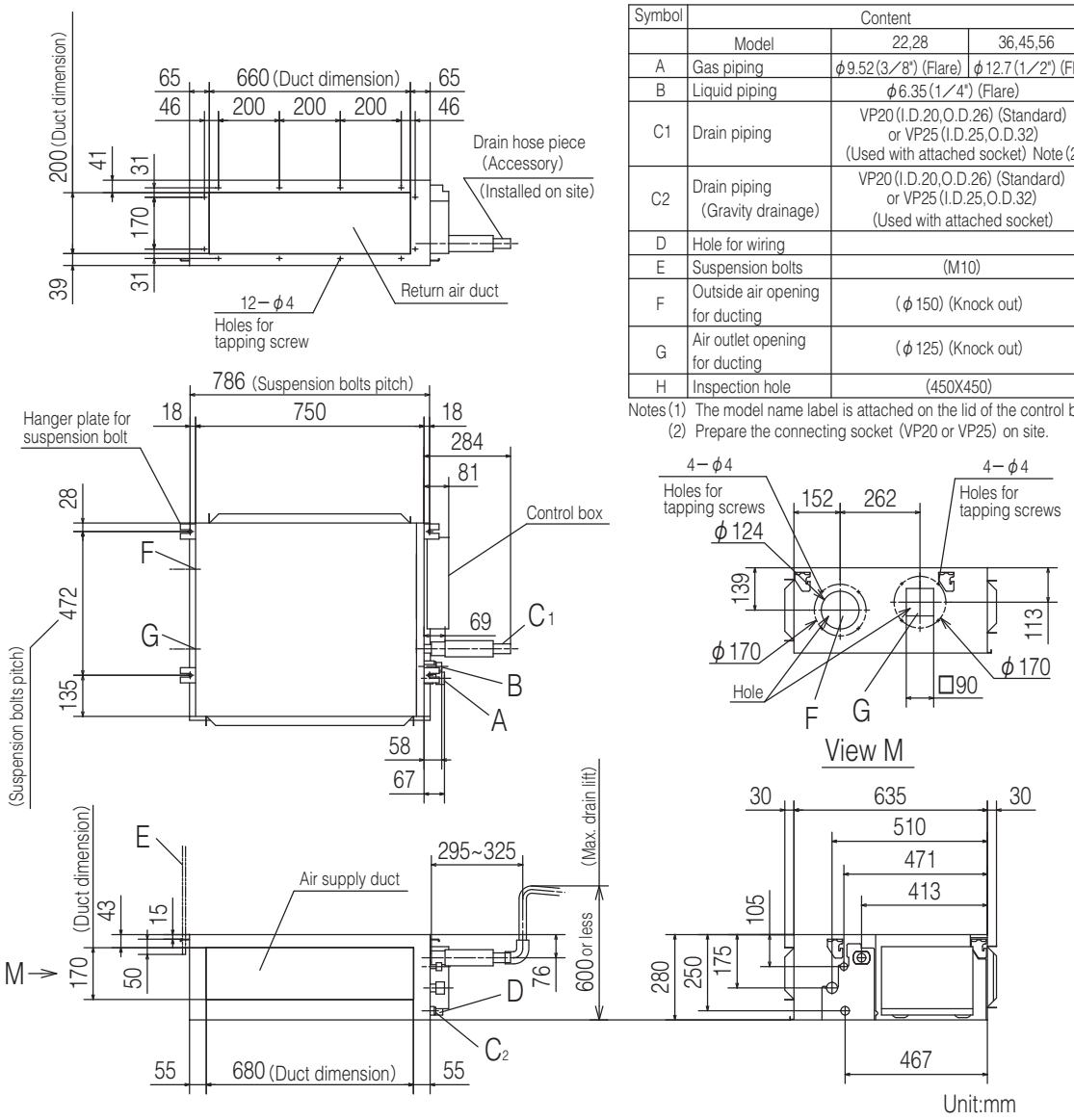

Symbol	Content		
	Model	22,28	36,45,56
A	Gas piping	φ9.52 (3/8") (Flare)	φ12.7 (1/2") (Flare)
B	Liquid piping	φ6.35 (1/4") (Flare)	
C1	Drain piping	VP20 (I.D.20,O.D.26) (Standard) or VP25 (I.D.25,O.D.32) (Used with attached socket) Note (2)	
C2	Drain piping (Gravity drainage)	VP20 (I.D.20,O.D.26) (Standard) or VP25 (I.D.25,O.D.32) (Used with attached socket)	
D	Hole for wiring		
E	Suspension bolts	(M10)	
F	Outside air opening for ducting	(φ150) (Knock out)	
G	Air outlet opening for ducting	(φ125) (Knock out)	
H	Inspection hole	(450X450)	

Notes (1) The model name label is attached on the lid of the control box.
(2) Prepare the connecting socket (VP20 or VP25) on site.

Unit:mm

Space for installation and service

Select either of two cases to keep space for installation and services.

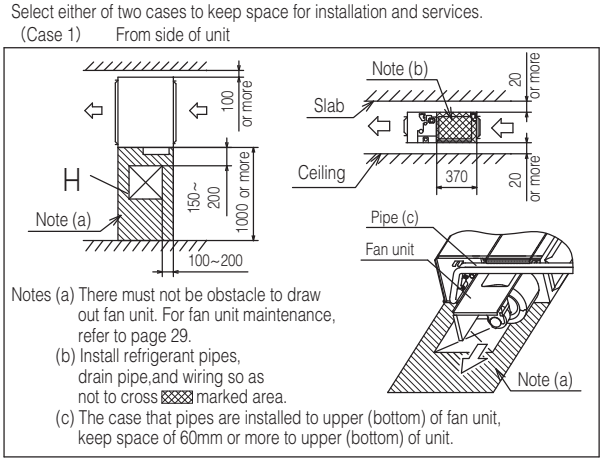

Notes (a) There must not be obstacle to draw out fan unit. For fan unit maintenance, refer to page 29.
(b) Install refrigerant pipes, drain pipe,and wiring so as not to cross ▩ marked area.
(c) The case that pipes are installed to upper (bottom) of fan unit, keep space of 60mm or more to upper (bottom) of unit.

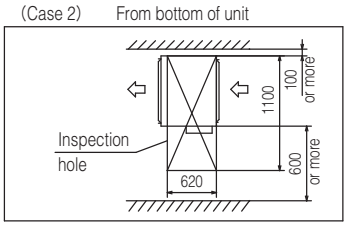

Remote controller
(Option)

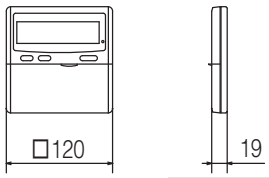

PJG000Z016

Models FDUM71KXE6F, 90KXE6F

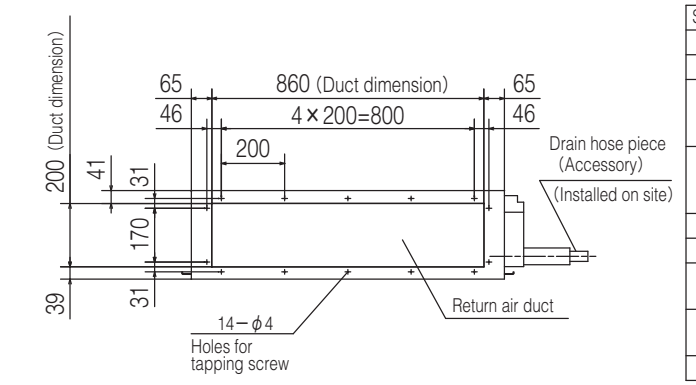

Symbol	Content	
A	Gas piping	φ15.88(5／8")(Flare)
B	Liquid piping	φ9.52(3／8")(Flare)
C1	Drain piping	VP20 (I.D.20,O.D.26) (Standard) or VP25 (I.D.25,O.D.32) (Used with attached socket) Note (2)
C2	Drain piping (Gravity drainage)	VP20 (I.D.20,O.D.26) (Standard) or VP25 (I.D.25,O.D.32) (Used with attached socket)
D	Hole for wiring	
E	Suspension bolts	(M10)
F	Outside air opening for ducting	(φ150)(Knock out)
G	Air outlet opening for ducting	(φ125)(Knock out)
H	Inspection hole	(450X450)

Notes(1) The model name label is attached on the lid of the control box.
(2) Prepare the connecting socket (VP20 or VP25) on site.

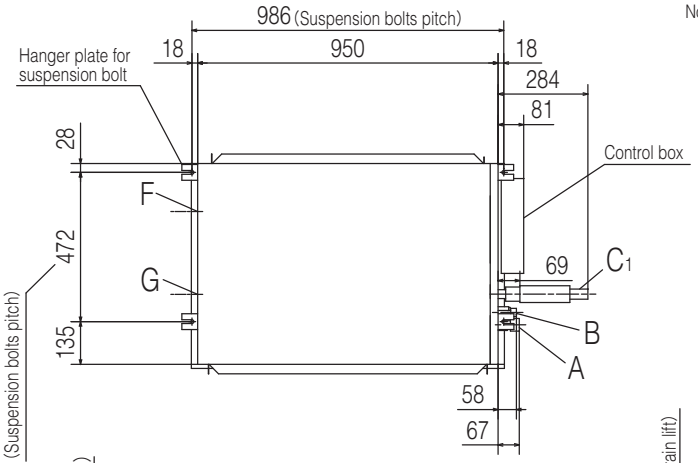

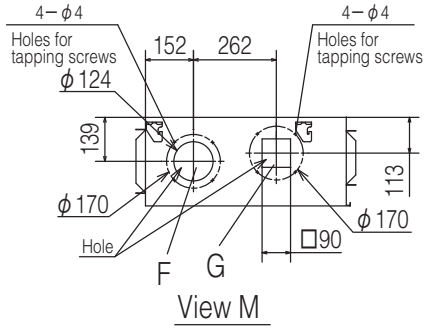

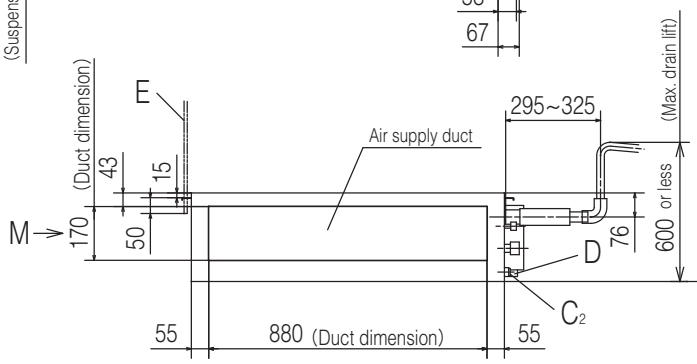

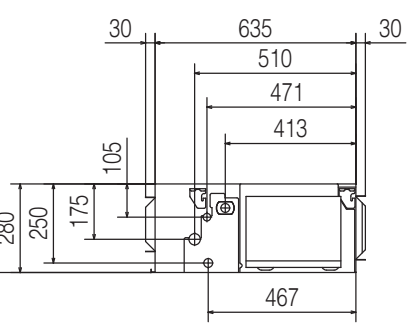

Space for installation and service

Select either of two cases to keep space for installation and services.

(Case 1) From side of unit

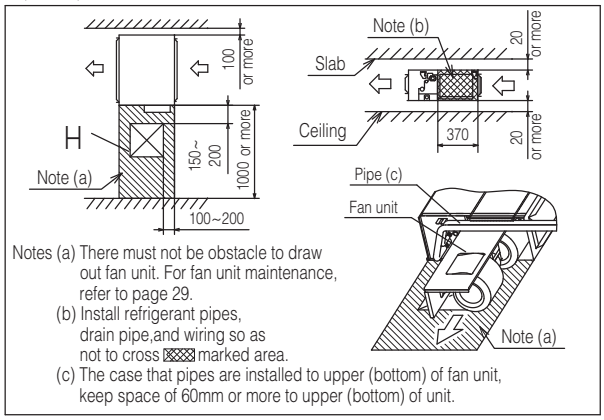

Notes (a) There must not be obstacle to draw out fan unit. For fan unit maintenance, refer to page 29.
(b) Install refrigerant pipes, drain pipe,and wiring so as not to cross ▩ marked area.
(c) The case that pipes are installed to upper (bottom) of fan unit, keep space of 60mm or more to upper (bottom) of unit.

(Case 2) From bottom of unit

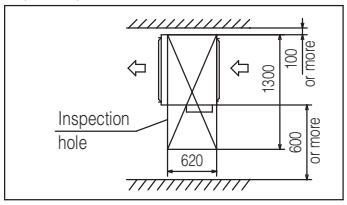

Remote controller
(Option)

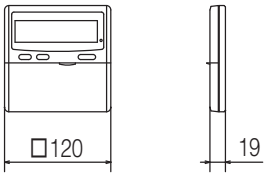

PJG000Z017

Models FDUM112KXE6F, 140KXE6F, 160KXE6F

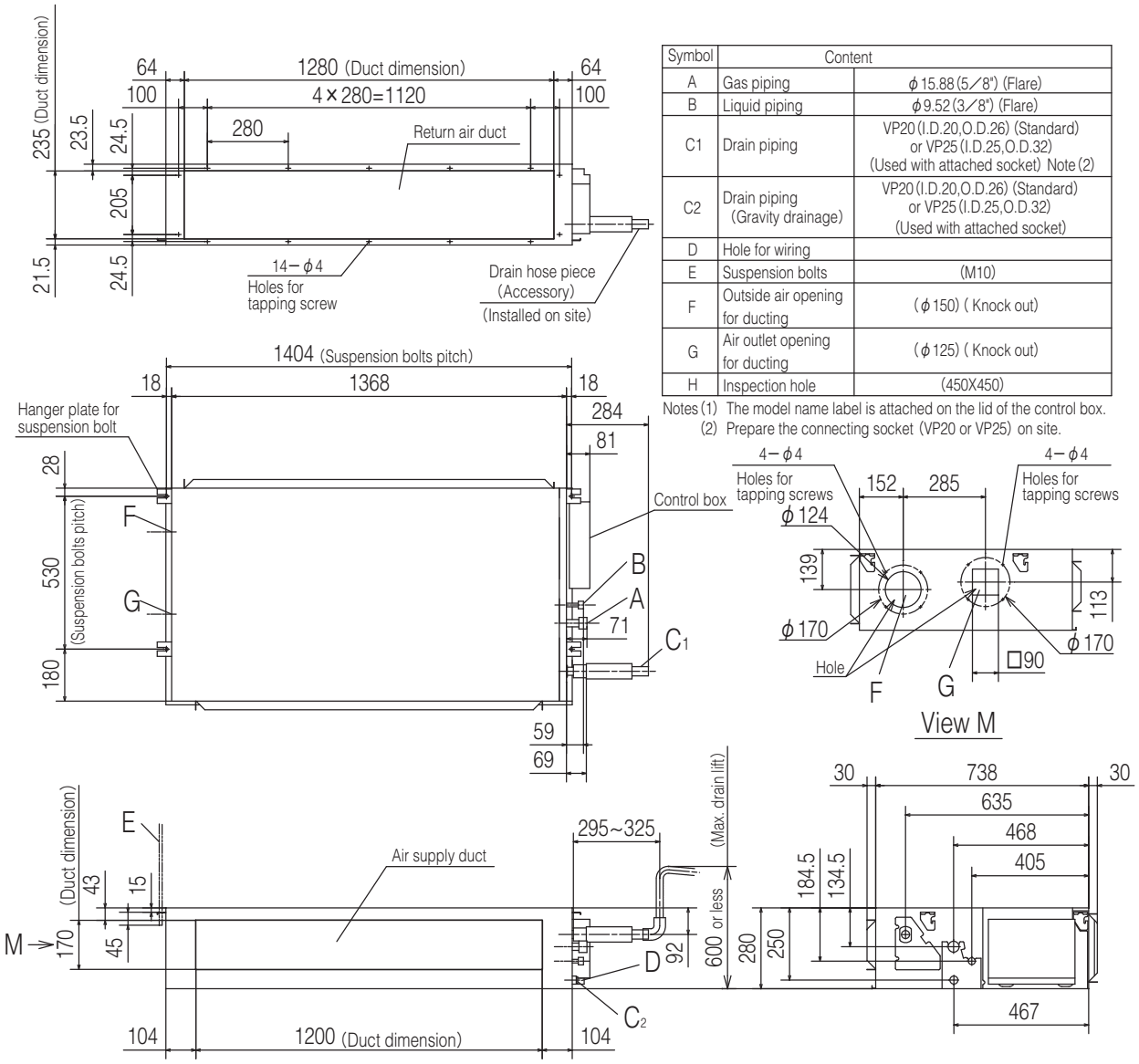

Unit:mm

Space for installation and service

Select either of two cases to keep space for installation and services.

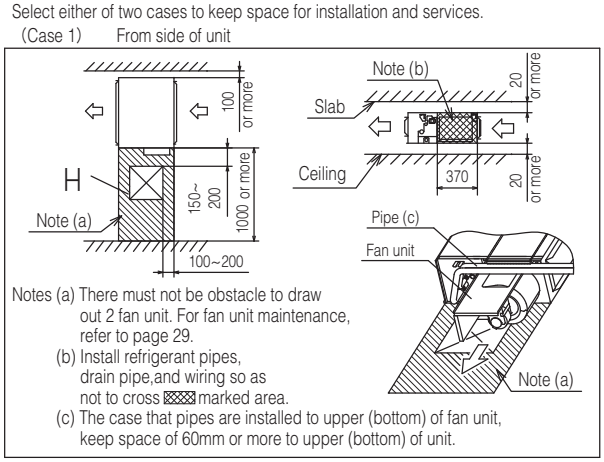

Notes (a) There must not be obstacle to draw out 2 fan unit. For fan unit maintenance, refer to page 29.
(b) Install refrigerant pipes, drain pipe,and wiring so as not to cross ▩ marked area.
(c) The case that pipes are installed to upper (bottom) of fan unit, keep space of 60mm or more to upper (bottom) of unit.

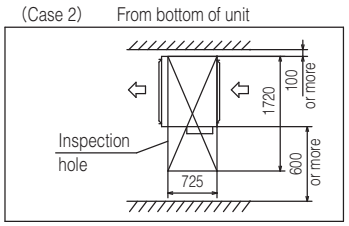

Remote controller
(Option)

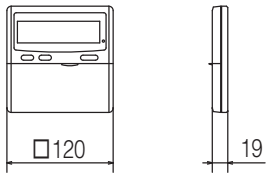

PJG000Z018

Symbol	Content	
A	Gas piping	φ15.88 (5/8") (Flare)
B	Liquid piping	φ9.52 (3/8") (Flare)
C1	Drain piping	VP20 (I.D.20,O.D.26) (Standard) or VP25 (I.D.25,O.D.32) (Used with attached socket) Note (2)
C2	Drain piping (Gravity drainage)	VP20 (I.D.20,O.D.26) (Standard) or VP25 (I.D.25,O.D.32) (Used with attached socket)
D	Hole for wiring	
E	Suspension bolts	(M10)
F	Outside air opening for ducting	(φ150) (Knock out)
G	Air outlet opening for ducting	(φ125) (Knock out)
H	Inspection hole	(450X450)

Notes (1) The model name label is attached on the lid of the control box.
(2) Prepare the connecting socket (VP20 or VP25) on site.

2.2 Wired remote controller (Optional parts)

Exposed mounting

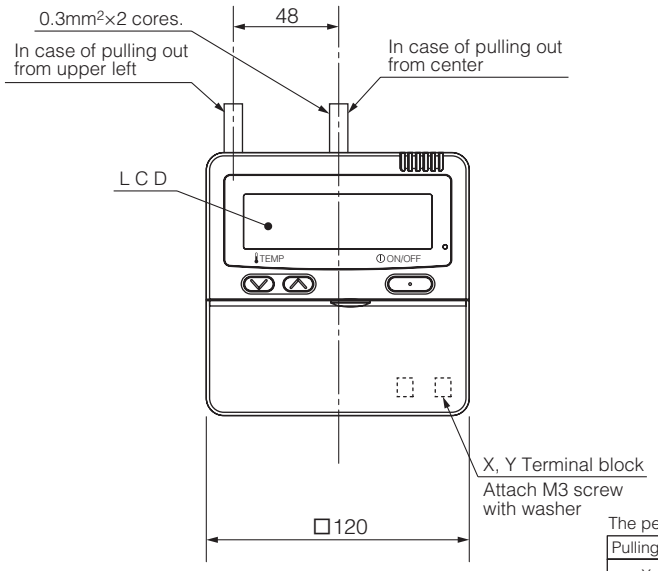

Wiring outlet
Cut off the upper thin part of remote control lower case with a nipper or knife, and grind burrs with a file etc.

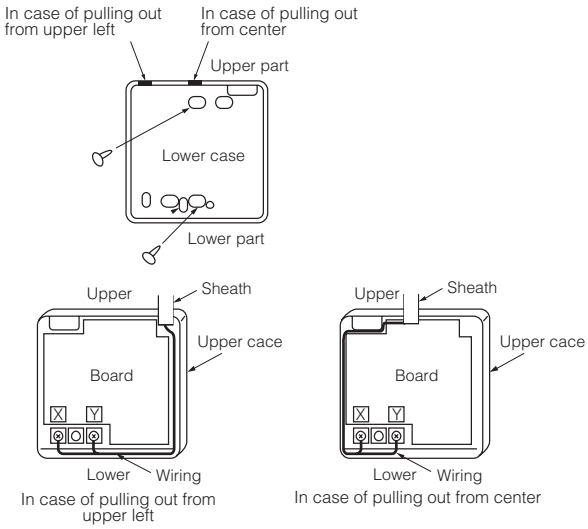

The peeling-off length of sheath

Pulling out from upper left	Pulling out from center
X wiring : 215mm Y wiring : 195mm	X wiring : 170mm Y wiring : 190mm

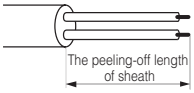

Embedded mounting

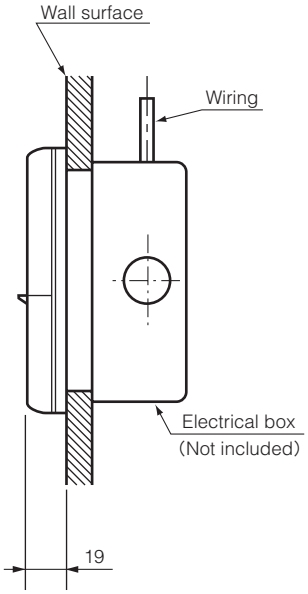

Remote control installation dimensions

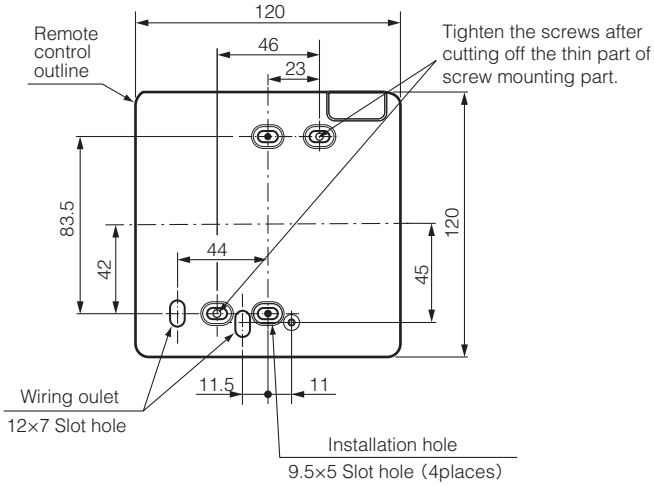

(1) Installation screw for remote control
M4 Screw (2 pieces)

Unit:mm

Wiring specifications

(1) If the prolongation is over 100m, change to the size below.
But, wiring in the remote controller case should be under 0.5mm². Change the wire size outside of the case according to wire connecting. Waterproof treatment is necessary at the wire connecting section. Be careful about contact failure.

Length	Wiring thickness
100 to 200m	0.5mm²×2 cores
Under 300m	0.75mm²×2 cores
Under 400m	1.25mm²×2 cores
Under 600m	2.0mm²×2 cores

PJZ000Z274

3 ELECTRICAL WIRINGS

Models FDUM22KXE6F, 28KXE6F, 36KXE6F, 45KXE6F, 56KXE6F

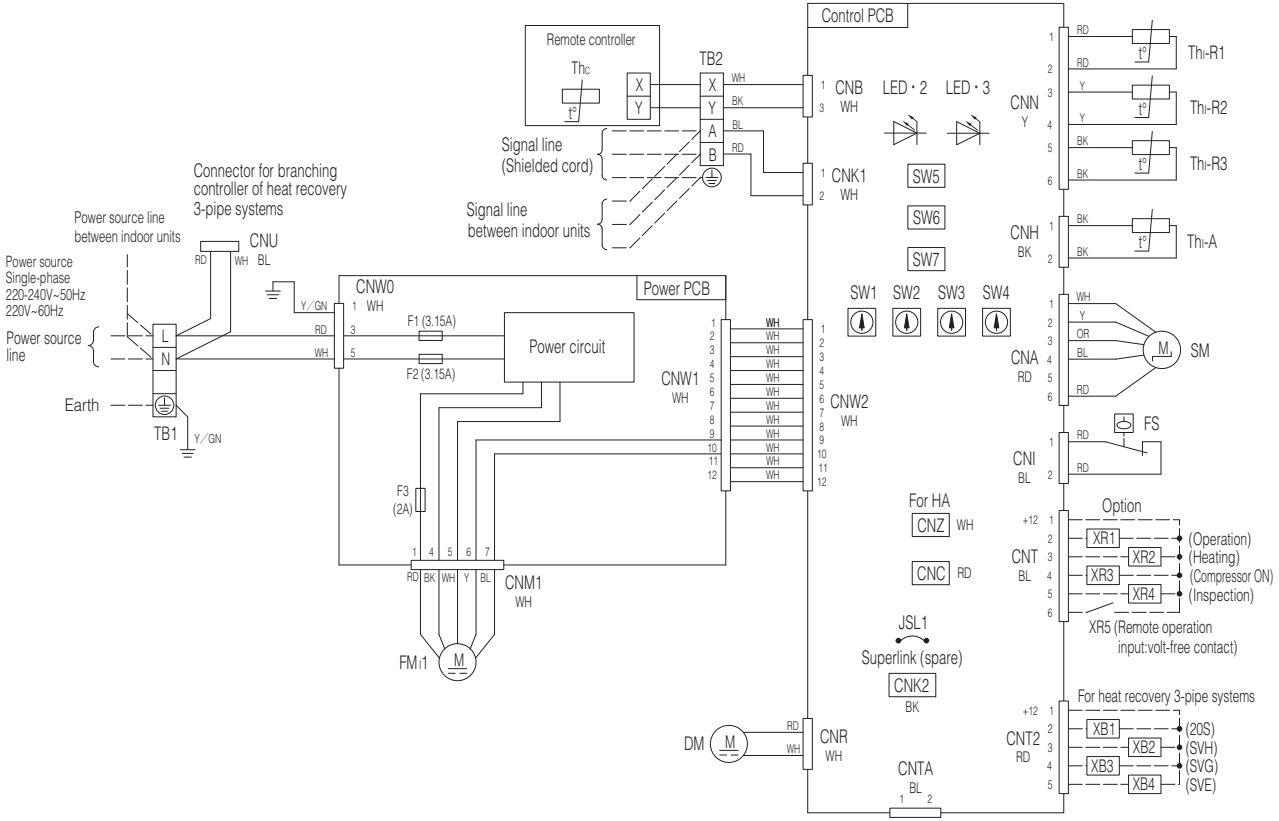

CNA~Z	Connector
DM	Drain motor
F1~3	Fuse
FMi1	Fan motor (with thermostat)
FS	Float switch
JSL1	Live Superlink terminal setting (for spare)
LED・2	Indication lamp (Green-Normal operation)
LED・3	Indication lamp (Red-Inspection)
SM	Stepping motor (For electronic expansion valve)
SW1	Indoor unit address : tens place
SW2	Indoor unit address : ones place
SW3	Outdoor unit address : tens place
SW4	Outdoor unit address : ones place
SW5-1	Automatic adjustment／Fixed previous version of Superlink protocol
SW5-2	Indoor unit address : hundreds place
SW6	Model capacity setting
SW7-1	Operation check, Drain motor test run
TB1	Terminal block（Power source）(□mark)
TB2	Terminal block（Signal line）(□mark)
Thc	Thermistor（Remote controller）
Thi-A	Thermistor（Return air）
Thi-R1,2,3	Thermistor（Heat exchanger）

Color Marks

Mark	Color	Mark	Color
BK	Black	RD	Red
BL	Blue	WH	White
BR	Brown	Y	Yellow
OR	Orange	Y／GN	Yellow／Green

Notes 1. - - - indicates wiring on site.

2. Use twin core cable (0.75~1.25mm²) at signal line between indoor unit and outdoor unit, and signal line between indoor units.
3. Use twin core cable (0.3mm²) at remote controller line. See spec sheet of remote controller in case that the total length is more than 100m.
4. Do not put signal line and remote controller line alongside power source line.

PJG000Z019

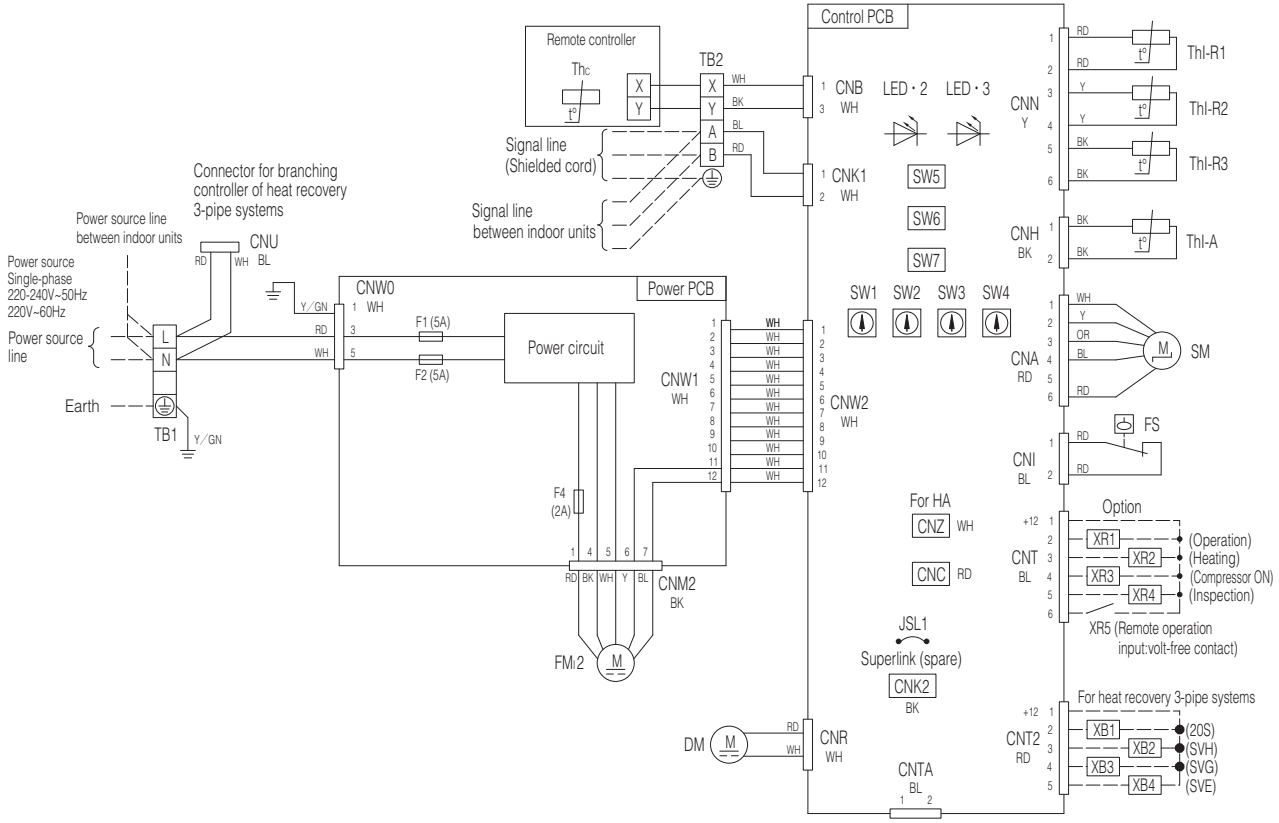

CNA~Z	Connector
DM	Drain motor
F1,2,4	Fuse
FMI2	Fan motor (with thermostat)
FS	Float switch
JSL1	Live Superlink terminal setting (for spare)
LED・2	Indication lamp (Green-Normal operation)
LED・3	Indication lamp (Red-Inspection)
SM	Stepping motor (For electronic expansion valve)
SW1	Indoor unit address : tens place
SW2	Indoor unit address : ones place
SW3	Outdoor unit address : tens place
SW4	Outdoor unit address : ones place
SW5-1	Automatic adjustment／Fixed previous version of Superlink protocol
SW5-2	Indoor unit address : hundreds place
SW6	Model capacity setting
SW7-1	Operation check, Drain motor test run
TB1	Terminal block〔Power source〕(□mark)
TB2	Terminal block〔Signal line〕(□mark)
Thc	Thermistor〔Remote controller〕
ThI-A	Thermistor〔Return air〕
ThI-R1,2,3	Thermistor〔Heat exchanger〕

Color Marks

Mark	Color	Mark	Color
BK	Black	RD	Red
BL	Blue	WH	White
BR	Brown	Y	Yellow
OR	Orange	Y／GN	Yellow／Green

Notes 1. - - - indicates wiring on site.
2. Use twin core cable (0.75~1.25mm²) at signal line between indoor unit and outdoor unit, and signal line between indoor units.
3. Use twin core cable (0.3mm²) at remote controller line. See spec sheet of remote controller in case that the total length is more than 100m.
4. Do not put signal line and remote controller line alongside power source line.

PJG000Z020

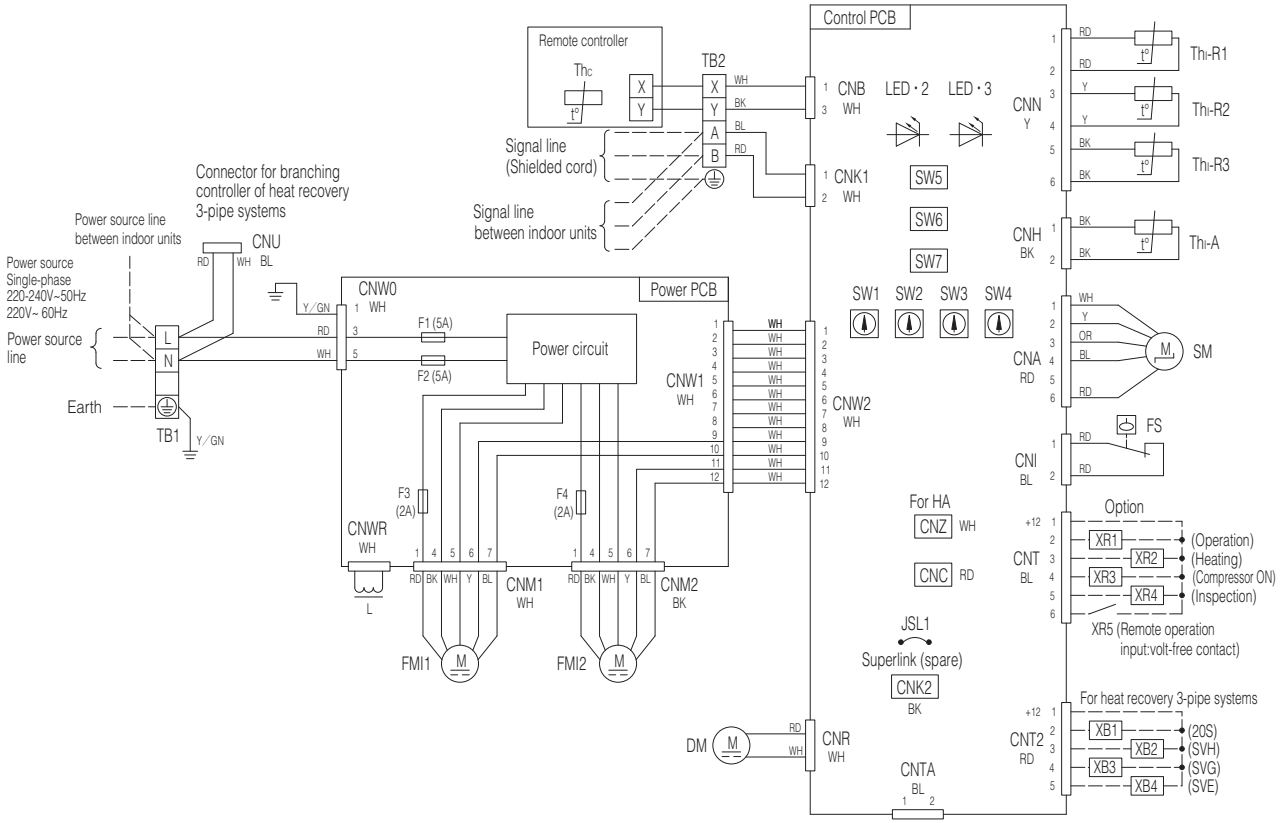

CNA~Z	Connector
DM	Drain motor
F1~4	Fuse
FMI1,2	Fan motor (with thermostat)
FS	Float switch
JSL1	Live Superlink terminal setting (for spare)
L	Reactor
LED・2	Indication lamp (Green-Normal operation)
LED・3	Indication lamp (Red-Inspection)
SM	Stepping motor (For electronic expansion valve)
SW1	Indoor unit address : tens place
SW2	Indoor unit address : ones place
SW3	Outdoor unit address : tens place
SW4	Outdoor unit address : ones place
SW5-1	Automatic adjustment／Fixed previous version of Superlink protocol
SW5-2	Indoor unit address : hundreds place
SW6	Model capacity setting
SW7-1	Operation check, Drain motor test run
TB1	Terminal block〔Power source〕(□mark)
TB2	Terminal block〔Signal line〕(□mark)
Thc	Thermistor〔Remote controller〕
Thi-A	Thermistor〔Return air〕
Thi-R1,2,3	Thermistor〔Heat exchanger〕

Color Marks

Mark	Color	Mark	Color
BK	Black	RD	Red
BL	Blue	WH	White
BR	Brown	Y	Yellow
OR	Orange	Y／GN	Yellow／Green

Notes 1. - - - indicates wiring on site.
2. Use twin core cable (0.75~1.25mm²) at signal line between indoor unit and outdoor unit, and signal line between indoor units.
3. Use twin core cable (0.3mm²) at remote controller line. See spec sheet of remote controller in case that the total length is more than 100m.
4. Do not put signal line and remote controller line alongside power source line.

PJG000Z021

4 NOISE LEVELS

Measured based on JIS B 8616
Mike position as right

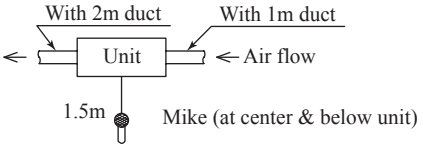

Models FDUM22,28,36,45,56KXE6F

Noise level 37 dB (A) at P-HIGH
32 dB (A) at HIGH
29 dB (A) at MEDIUM
26 dB (A) at LOW

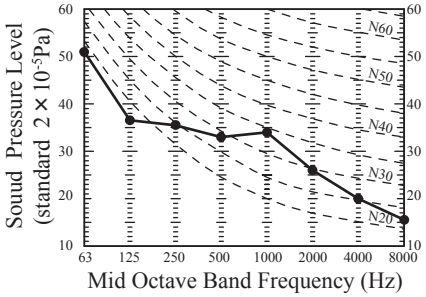

Models FDUM71,90KXE6F

Noise level 38 dB (A) at P-HIGH
33 dB (A) at HIGH
29 dB (A) at MEDIUM
25 dB (A) at LOW

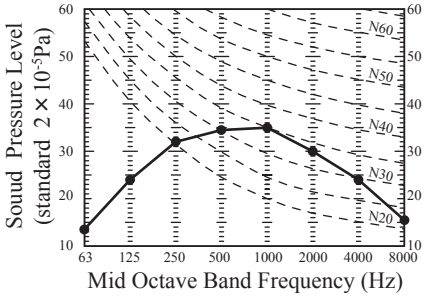

Model FDUM112KXE6F

Noise level 44 dB (A) at P-HIGH
38 dB (A) at HIGH
36 dB (A) at MEDIUM
30 dB (A) at LOW

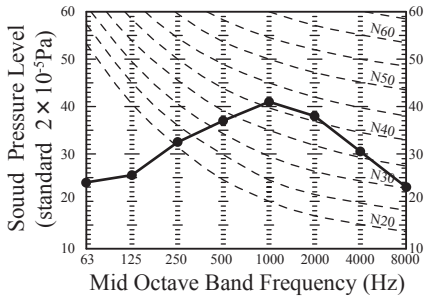

Model FDUM140KXE6F

Noise level 45 dB (A) at P-HIGH
40 dB (A) at HIGH
34 dB (A) at MEDIUM
29 dB (A) at LOW

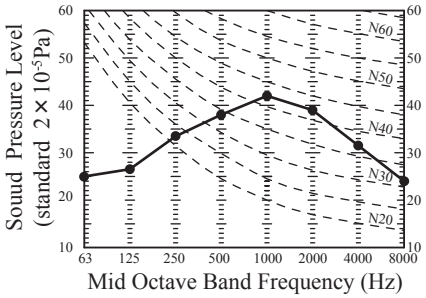

Model FDUM160KXE6F

Noise level 47 dB (A) at P-HIGH
40 dB (A) at HIGH
35 dB (A) at MEDIUM
30 dB (A) at LOW

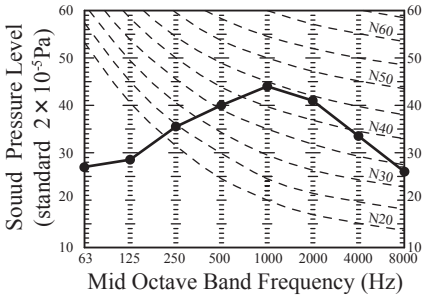

5 CHARACTERISTICS OF FAN

- Characteristic FAN (1) shows air flow vs. External Static Pressure (E.S.P.) range where settings of E.S.P. are maximum E.S.P. (100Pa) , rated E.S.P., and minimum E.S.P. (10Pa)
- Characteristic FAN (2) shows air flow vs. E.S.P curve when set fan tap is set P-Hi with each setting of E.S.P by remote controller.
- External Static Pressure (E.S.P.) can be set by wired remote controller.
- You can set required E.S.P. by wired remote controller which calculate it with the set air flow rate and pressure loss of the duct connected.

Models FDUM22KXE6F, 28KXE6F, 36KXE6F, 45KXE6F, 50KXE6F

Characteristic FAN(1)

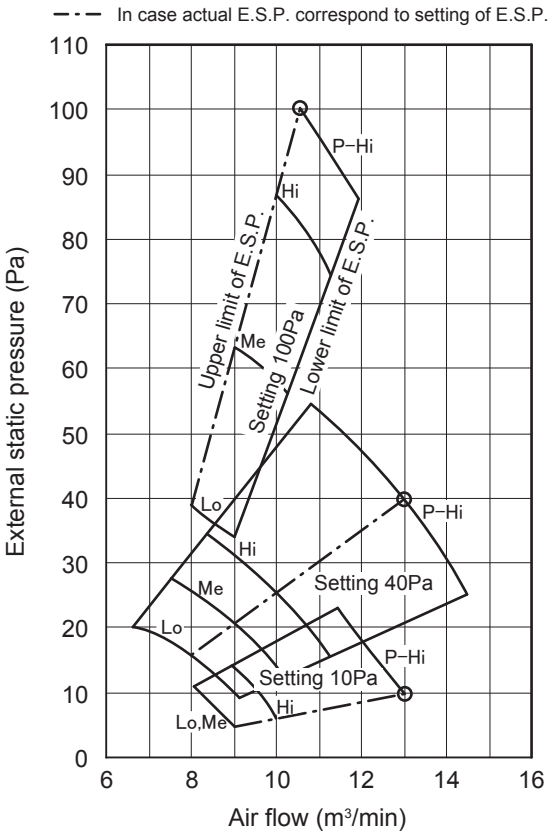

Characteristic FAN(2)

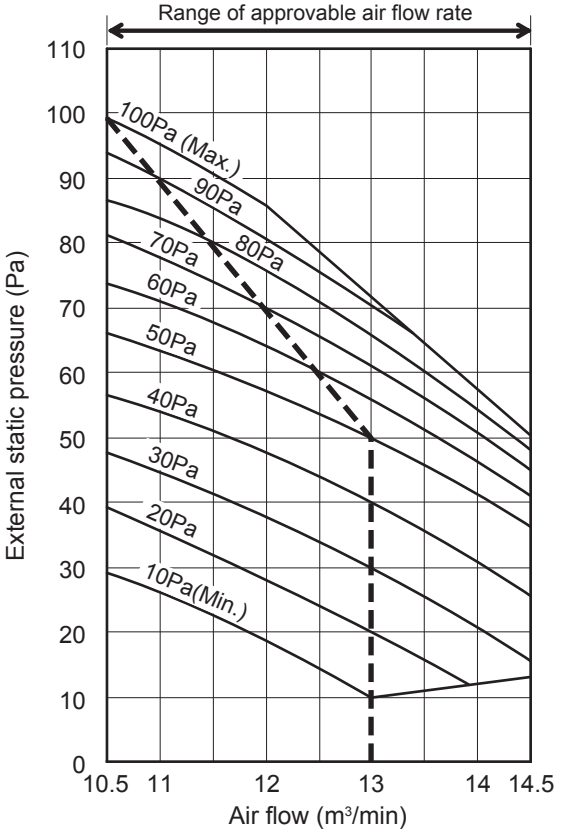

Models FDUM71KXE6F, 90KXE6F

Characteristic FAN(1)

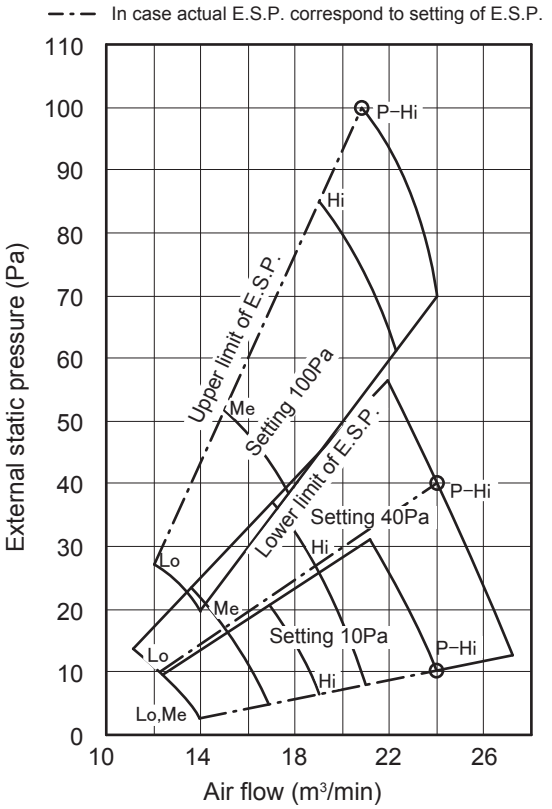

Characteristic FAN(2)

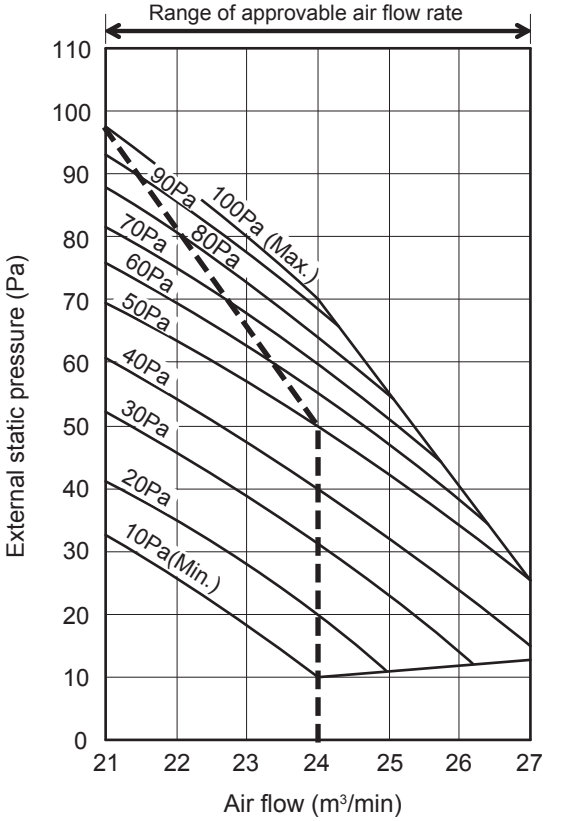

Model FDUM112KXE6F

Characteristic FAN(1)

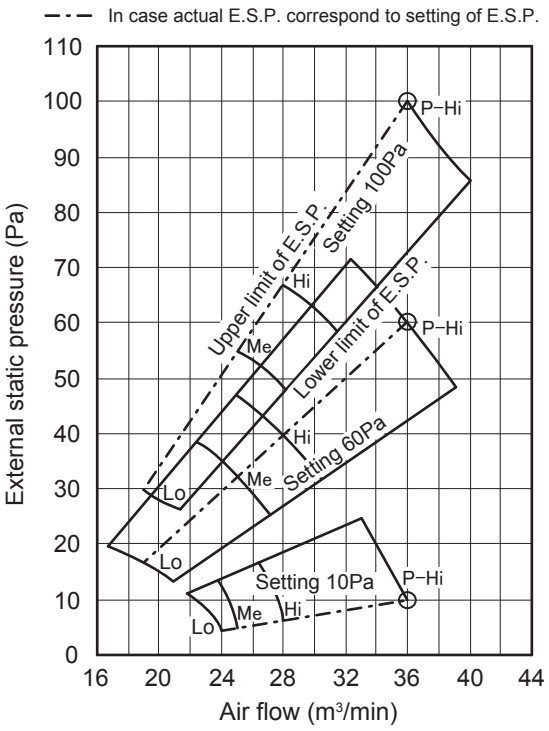

Characteristic FAN(2)

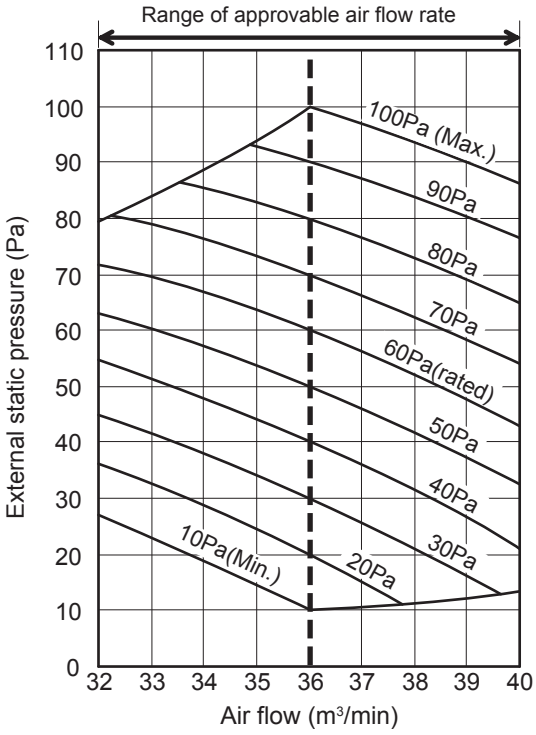

Model FDUM140KXE6F

Characteristic FAN(1)

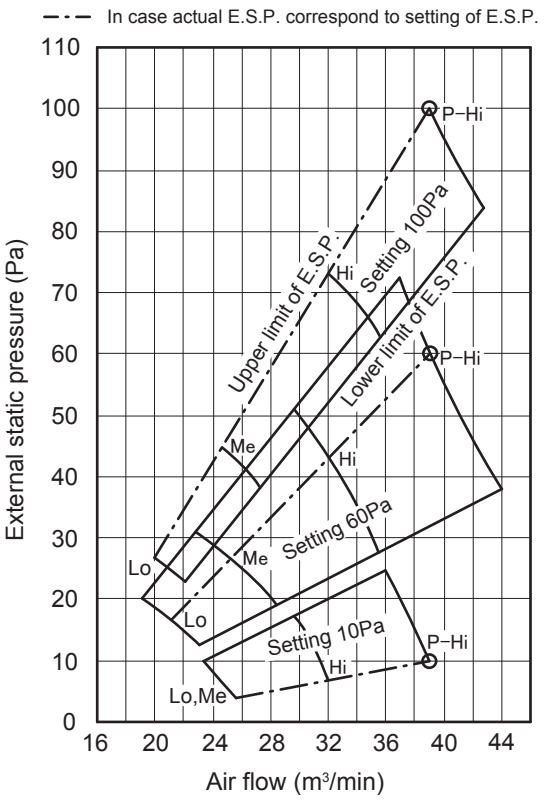

Characteristic FAN(2)

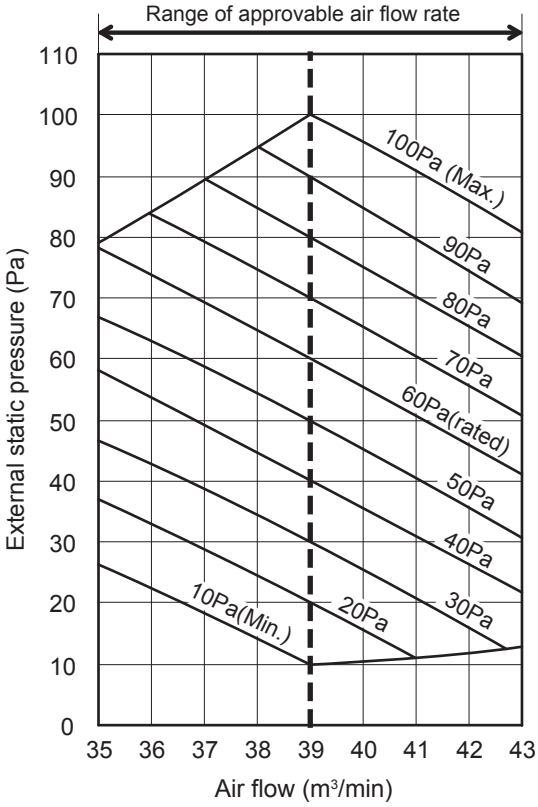

Model FDUM160KXE6F

Characteristic FAN(1)

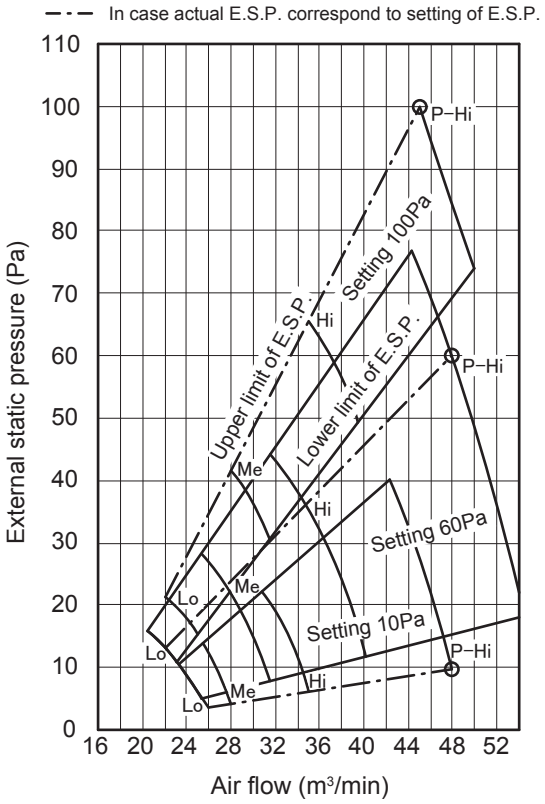

Characteristic FAN(2)

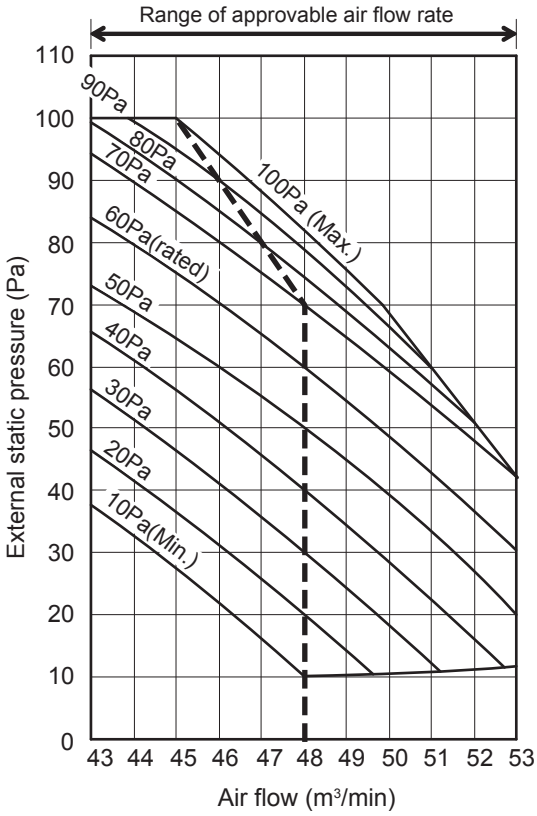

6 CAPACITY TABLES

Model **FDUM22KXE6F** Cool Mode

Air flow	Outdoor air temp.	Indoor air temperature 21℃CDB 14℃CWB TC	21℃CDB 14℃CWB SHC	23℃CDB 16℃CWB TC	23℃CDB 16℃CWB SHC	26℃CDB 18℃CWB TC	26℃CDB 18℃CWB SHC	27℃CDB 19℃CWB TC	27℃CDB 19℃CWB SHC	28℃CDB 20℃CWB TC	28℃CDB 20℃CWB SHC	31℃CDB 22℃CWB TC	31℃CDB 22℃CWB SHC	33℃CDB 24℃CWB TC	33℃CDB 24℃CWB SHC
P-Hi 13 (m³/min)	10			1.80	1.73	2.16	2.07	2.33	2.24	2.48	2.38	2.78	2.67	2.89	2.77
	12			1.80	1.73	2.16	2.07	2.33	2.24	2.48	2.38	2.77	2.66	2.87	2.76
	14			1.80	1.73	2.16	2.07	2.33	2.24	2.47	2.37	2.76	2.65	2.86	2.75
	16			1.80	1.73	2.16	2.07	2.33	2.24	2.47	2.37	2.75	2.64	2.85	2.74
	18			1.80	1.73	2.16	2.07	2.33	2.24	2.47	2.37	2.74	2.63	2.84	2.73
	20			1.80	1.73	2.16	2.07	2.33	2.24	2.46	2.36	2.73	2.62	2.82	2.71
	22			1.80	1.73	2.15	2.06	2.33	2.24	2.45	2.35	2.69	2.58	2.78	2.67
	24			1.80	1.73	2.15	2.06	2.33	2.24	2.44	2.34	2.66	2.55	2.75	2.64
	26			1.80	1.73	2.14	2.05	2.31	2.22	2.41	2.31	2.62	2.52	2.70	2.59
	28	1.63	1.56	1.80	1.73	2.13	2.04	2.29	2.20	2.38	2.28	2.58	2.48	2.66	2.55
	30	1.63	1.56	1.79	1.72	2.12	2.04	2.27	2.18	2.36	2.27	2.54	2.44	2.62	2.52
	32	1.63	1.56	1.79	1.72	2.10	2.02	2.24	2.15	2.33	2.24	2.50	2.40	2.58	2.48
	34	1.63	1.56	1.78	1.71	2.09	2.01	2.21	2.12	2.29	2.20	2.44	2.34	2.53	2.43
	35	1.63	1.56	1.78	1.71	2.09	2.01	2.20	2.11	2.27	2.18	2.42	2.32	2.50	2.40
	36	1.63	1.56	1.78	1.71	2.07	1.99	2.19	2.10	2.25	2.16	2.37	2.28	2.45	2.35
	38	1.63	1.56	1.77	1.70	2.04	1.96	2.17	2.08	2.21	2.12	2.29	2.20	2.36	2.27
	39	1.63	1.56	1.77	1.70	2.03	1.95	2.16	2.07	2.19	2.10	2.24	2.15	2.31	2.22
	41	1.63	1.56	1.76	1.69	1.97	1.89	2.07	1.99	2.09	2.01	2.14	2.05	2.20	2.11
	43	1.63	1.56	1.76	1.69	1.91	1.83	1.98	1.90	2.00	1.92	2.05	1.97	2.09	2.01

Heat Mode

Air flow (m³/min)	outdoor temp DB	outdoor temp WB	indoor temp 16℃CDB	18℃CDB	20℃CDB	22℃CDB	24℃CDB
P-Hi 13 (m³/min)	-19.8	-20	1.45	1.45	1.45	1.45	1.45
	-17.8	-18	1.54	1.54	1.54	1.54	1.54
	-15.7	-16	1.64	1.64	1.64	1.64	1.64
	-13.7	-14	1.73	1.73	1.73	1.73	1.73
	-11.7	-12	1.82	1.82	1.82	1.82	1.82
	-9.6	-10	1.92	1.92	1.92	1.92	1.92
	-7.5	-8	2.03	2.03	2.03	2.03	2.03
	-5.5	-6	2.15	2.15	2.15	2.15	2.15
	-3.4	-4	2.23	2.22	2.22	2.20	2.18
	-1.3	-2	2.30	2.29	2.29	2.24	2.20
	0.8	0	2.43	2.39	2.36	2.27	2.19
	3.9	3	2.63	2.54	2.44	2.31	2.17
	7.0	6	2.88	2.69	2.50	2.33	2.15
	10.1	9	2.86	2.67	2.49	2.31	2.13
	13.2	12	2.84	2.66	2.48	2.29	2.11
	16.9	15.5	2.82	2.63	2.45	2.27	2.09

Air flow	Outdoor air temp.	Indoor air temperature 21℃CDB 14℃CWB TC	21℃CDB 14℃CWB SHC	23℃CDB 16℃CWB TC	23℃CDB 16℃CWB SHC	26℃CDB 18℃CWB TC	26℃CDB 18℃CWB SHC	27℃CDB 19℃CWB TC	27℃CDB 19℃CWB SHC	28℃CDB 20℃CWB TC	28℃CDB 20℃CWB SHC	31℃CDB 22℃CWB TC	31℃CDB 22℃CWB SHC	33℃CDB 24℃CWB TC	33℃CDB 24℃CWB SHC
Hi 10 (m³/min)	10			1.78	1.71	2.13	2.04	2.30	2.21	2.45	2.35	2.74	2.58	2.85	2.54
	12			1.78	1.71	2.13	2.04	2.30	2.21	2.44	2.34	2.73	2.58	2.83	2.53
	14			1.78	1.71	2.13	2.04	2.30	2.21	2.44	2.34	2.72	2.58	2.82	2.53
	16			1.78	1.71	2.13	2.04	2.30	2.21	2.44	2.34	2.71	2.57	2.81	2.52
	18			1.78	1.71	2.13	2.04	2.30	2.21	2.43	2.33	2.70	2.57	2.80	2.52
	20			1.78	1.71	2.13	2.04	2.30	2.21	2.43	2.33	2.69	2.57	2.78	2.52
	22			1.78	1.71	2.13	2.04	2.30	2.21	2.42	2.32	2.66	2.55	2.75	2.51
	24			1.77	1.70	2.12	2.04	2.30	2.21	2.41	2.31	2.62	2.52	2.71	2.49
	26			1.77	1.70	2.11	2.03	2.28	2.19	2.38	2.28	2.58	2.48	2.67	2.48
	28	1.61	1.55	1.77	1.70	2.10	2.02	2.26	2.17	2.35	2.26	2.54	2.44	2.63	2.47
	30	1.61	1.55	1.77	1.70	2.09	2.01	2.24	2.15	2.32	2.23	2.50	2.40	2.59	2.46
	32	1.61	1.55	1.76	1.69	2.07	1.99	2.21	2.12	2.30	2.21	2.46	2.36	2.55	2.45
	34	1.61	1.55	1.76	1.69	2.07	1.99	2.18	2.09	2.26	2.17	2.41	2.31	2.49	2.39
	35	1.61	1.55	1.75	1.68	2.06	1.98	2.17	2.08	2.24	2.15	2.39	2.29	2.47	2.37
	36	1.61	1.55	1.75	1.68	2.05	1.97	2.16	2.07	2.22	2.13	2.34	2.25	2.42	2.32
	38	1.61	1.55	1.75	1.68	2.01	1.93	2.14	2.05	2.18	2.09	2.26	2.17	2.32	2.23
	39	1.61	1.55	1.74	1.67	2.00	1.92	2.13	2.04	2.16	2.07	2.21	2.12	2.28	2.19
	41	1.61	1.55	1.74	1.67	1.94	1.86	2.04	1.96	2.07	1.99	2.12	2.04	2.17	2.08
	43	1.61	1.55	1.73	1.66	1.88	1.80	1.95	1.87	1.97	1.89	2.02	1.94	2.06	1.98

Air flow (m³/min)	outdoor temp DB	outdoor temp WB	indoor temp 16℃CDB	18℃CDB	20℃CDB	22℃CDB	24℃CDB
Hi 10 (m³/min)	-19.8	-20	1.43	1.43	1.43	1.43	1.43
	-17.8	-18	1.52	1.52	1.52	1.52	1.52
	-15.7	-16	1.61	1.61	1.61	1.61	1.61
	-13.7	-14	1.70	1.70	1.70	1.70	1.70
	-11.7	-12	1.79	1.79	1.79	1.79	1.79
	-9.6	-10	1.89	1.89	1.89	1.89	1.89
	-7.5	-8	2.00	2.00	2.00	2.00	2.00
	-5.5	-6	2.12	2.12	2.12	2.12	2.12
	-3.4	-4	2.19	2.19	2.18	2.16	2.14
	-1.3	-2	2.26	2.26	2.25	2.21	2.16
	0.8	0	2.39	2.35	2.32	2.24	2.15
	3.9	3	2.59	2.50	2.40	2.27	2.13
	7.0	6	2.83	2.64	2.46	2.29	2.12
	10.1	9	2.81	2.63	2.45	2.27	2.10
	13.2	12	2.79	2.61	2.44	2.26	2.08
	16.9	15.5	2.77	2.59	2.41	2.24	2.06

Air flow	Outdoor air temp.	Indoor air temperature 21℃CDB 14℃CWB TC	21℃CDB 14℃CWB SHC	23℃CDB 16℃CWB TC	23℃CDB 16℃CWB SHC	26℃CDB 18℃CWB TC	26℃CDB 18℃CWB SHC	27℃CDB 19℃CWB TC	27℃CDB 19℃CWB SHC	28℃CDB 20℃CWB TC	28℃CDB 20℃CWB SHC	31℃CDB 22℃CWB TC	31℃CDB 22℃CWB SHC	33℃CDB 24℃CWB TC	33℃CDB 24℃CWB SHC
Me 9 (m³/min)	10			1.70	1.63	2.04	1.96	2.20	2.11	2.35	2.20	2.63	2.38	2.73	2.33
	12			1.70	1.63	2.04	1.96	2.20	2.11	2.34	2.19	2.62	2.38	2.72	2.33
	14			1.70	1.63	2.04	1.96	2.20	2.11	2.34	2.19	2.61	2.37	2.70	2.32
	16			1.70	1.63	2.04	1.96	2.20	2.11	2.34	2.19	2.60	2.37	2.69	2.32
	18			1.70	1.63	2.04	1.96	2.20	2.11	2.33	2.19	2.59	2.37	2.68	2.32
	20			1.70	1.63	2.04	1.96	2.20	2.11	2.33	2.19	2.58	2.36	2.67	2.31
	22			1.70	1.63	2.04	1.96	2.20	2.11	2.32	2.19	2.55	2.35	2.63	2.30
	24			1.70	1.63	2.04	1.96	2.20	2.11	2.31	2.18	2.51	2.34	2.60	2.29
	26			1.70	1.63	2.03	1.95	2.18	2.09	2.28	2.17	2.48	2.33	2.56	2.28
	28	1.54	1.48	1.70	1.63	2.02	1.94	2.16	2.07	2.25	2.16	2.44	2.32	2.52	2.27
	30	1.54	1.48	1.69	1.62	2.00	1.92	2.14	2.05	2.23	2.14	2.40	2.30	2.48	2.26
	32	1.54	1.48	1.69	1.62	1.99	1.91	2.12	2.04	2.20	2.11	2.36	2.27	2.44	2.25
	34	1.54	1.48	1.68	1.61	1.98	1.90	2.09	2.01	2.17	2.08	2.31	2.22	2.39	2.23
	35	1.54	1.48	1.68	1.61	1.98	1.90	2.08	2.00	2.15	2.06	2.29	2.20	2.37	2.22
	36	1.54	1.48	1.68	1.61	1.96	1.88	2.07	1.99	2.13	2.04	2.25	2.16	2.32	2.21
	38	1.54	1.48	1.67	1.60	1.93	1.85	2.05	1.97	2.09	2.01	2.16	2.07	2.23	2.14
	39	1.54	1.48	1.67	1.60	1.92	1.84	2.04	1.96	2.07	1.99	2.12	2.04	2.18	2.09
	41	1.54	1.48	1.67	1.60	1.86	1.79	1.96	1.88	1.98	1.90	2.03	1.95	2.08	2.00
	43	1.54	1.48	1.66	1.59	1.80	1.73	1.87	1.80	1.89	1.81	1.93	1.85	1.98	1.90

Air flow (m³/min)	outdoor temp DB	outdoor temp WB	indoor temp 16℃CDB	18℃CDB	20℃CDB	22℃CDB	24℃CDB
Me 9 (m³/min)	-19.8	-20	1.36	1.36	1.36	1.36	1.36
	-17.8	-18	1.45	1.45	1.45	1.45	1.45
	-15.7	-16	1.54	1.54	1.54	1.54	1.54
	-13.7	-14	1.63	1.63	1.63	1.63	1.63
	-11.7	-12	1.71	1.71	1.71	1.71	1.71
	-9.6	-10	1.80	1.80	1.80	1.80	1.80
	-7.5	-8	1.91	1.91	1.91	1.91	1.91
	-5.5	-6	2.02	2.02	2.02	2.02	2.02
	-3.4	-4	2.09	2.09	2.09	2.07	2.04
	-1.3	-2	2.16	2.16	2.15	2.11	2.07
	0.8	0	2.28	2.25	2.21	2.14	2.06
	3.9	3	2.47	2.39	2.30	2.17	2.04
	7.0	6	2.70	2.53	2.35	2.19	2.02
	10.1	9	2.68	2.51	2.34	2.17	2.00
	13.2	12	2.67	2.50	2.33	2.16	1.99
	16.9	15.5	2.65	2.48	2.31	2.14	1.97

Air flow	Outdoor air temp.	Indoor air temperature 21℃CDB 14℃CWB TC	21℃CDB 14℃CWB SHC	23℃CDB 16℃CWB TC	23℃CDB 16℃CWB SHC	26℃CDB 18℃CWB TC	26℃CDB 18℃CWB SHC	27℃CDB 19℃CWB TC	27℃CDB 19℃CWB SHC	28℃CDB 20℃CWB TC	28℃CDB 20℃CWB SHC	31℃CDB 22℃CWB TC	31℃CDB 22℃CWB SHC	33℃CDB 24℃CWB TC	33℃CDB 24℃CWB SHC
Lo 8 (m³/min)	10			1.59	1.53	1.90	1.82	2.06	1.97	2.19	1.99	2.45	2.15	2.54	2.11
	12			1.59	1.53	1.90	1.82	2.06	1.97	2.18	1.98	2.44	2.15	2.53	2.10
	14			1.59	1.53	1.90	1.82	2.06	1.97	2.18	1.98	2.43	2.14	2.52	2.10
	16			1.59	1.53	1.90	1.82	2.06	1.97	2.18	1.98	2.42	2.14	2.51	2.10
	18			1.59	1.53	1.90	1.82	2.06	1.97	2.18	1.98	2.42	2.14	2.50	2.10
	20			1.59	1.53	1.90	1.82	2.06	1.97	2.17	1.98	2.41	2.14	2.49	2.09
	22			1.59	1.53	1.90	1.82	2.06	1.97	2.16	1.98	2.38	2.13	2.46	2.08
	24			1.59	1.53	1.90	1.82	2.06	1.97	2.15	1.97	2.35	2.12	2.42	2.07
	26			1.58	1.52	1.89	1.81	2.04	1.96	2.13	1.97	2.31	2.11	2.38	2.06
	28	1.44	1.38	1.58	1.52	1.88	1.80	2.02	1.94	2.10	1.96	2.27	2.09	2.35	2.05
	30	1.44	1.38	1.58	1.52	1.87	1.80	2.00	1.92	2.08	1.95	2.24	2.08	2.31	2.04
	32	1.44	1.38	1.58	1.52	1.85	1.78	1.98	1.90	2.05	1.94	2.20	2.07	2.28	2.03
	34	1.44	1.38	1.57	1.51	1.85	1.78	1.95	1.87	2.02	1.93	2.16	2.06	2.23	2.01
	35	1.44	1.38	1.57	1.51	1.84	1.77	1.94	1.86	2.00	1.92	2.13	2.04	2.21	2.01
	36	1.44	1.38	1.57	1.51	1.83	1.76	1.93	1.85	1.98	1.90	2.09	2.01	2.16	1.99
	38	1.44	1.38	1.56	1.50	1.80	1.73	1.91	1.83	1.95	1.87	2.02	1.94	2.08	1.97
	39	1.44	1.38	1.56	1.50	1.79	1.72	1.90	1.82	1.93	1.85	1.98	1.90	2.04	1.96
	41	1.44	1.38	1.55	1.49	1.73	1.66	1.82	1.75	1.85	1.78	1.89	1.81	1.94	1.86
	43	1.44	1.38	1.55	1.49	1.68	1.61	1.75	1.68	1.77	1.70	1.80	1.73	1.84	1.77

Air flow (m³/min)	outdoor temp DB	outdoor temp WB	indoor temp 16℃CDB	18℃CDB	20℃CDB	22℃CDB	24℃CDB
Lo 8 (m³/min)	-19.8	-20	1.26	1.26	1.26	1.26	1.26
	-17.8	-18	1.35	1.35	1.35	1.35	1.35
	-15.7	-16	1.43	1.43	1.43	1.43	1.43
	-13.7	-14	1.51	1.51	1.51	1.51	1.51
	-11.7	-12	1.59	1.59	1.59	1.59	1.59
	-9.6	-10	1.67	1.67	1.67	1.67	1.67
	-7.5	-8	1.77	1.77	1.77	1.77	1.77
	-5.5	-6	1.87	1.87	1.87	1.87	1.87
	-3.4	-4	1.94	1.94	1.93	1.92	1.90
	-1.3	-2	2.01	2.00	1.99	1.96	1.92
	0.8	0	2.11	2.08	2.05	1.98	1.91
	3.9	3	2.29	2.21	2.13	2.01	1.89
	7.0	6	2.51	2.34	2.18	2.03	1.87
	10.1	9	2.49	2.33	2.17	2.02	1.86
	13.2	12	2.47	2.32	2.16	2.00	1.84
	16.9	15.5	2.46	2.30	2.14	1.98	1.82

Note(1) This data shows average statuses out of those possible to occur in the system control.
(Depending on controls, there may be ranges where the operation is not conducted continuously.)
(2) Symbols are as follows
TC :Total cooling capacity(kW)
SHC :Sensible heat capacity(kW)

PJG000Z022

Model **FDUM28KXE6F** Cool Mode

Air flow	Outdoor air temp.	Indoor air temperature 21℃CDB 14℃CWB TC	SHC	23℃CDB 16℃WB TC	SHC	26℃CDB 18℃WB TC	SHC	27℃CDB 19℃WB TC	SHC	28℃CDB 20℃WB TC	SHC	31℃CDB 22℃WB TC	SHC	33℃CDB 24℃WB TC	SHC
P-Hi 13 (m³/min)	10			2.30	2.21	2.74	2.63	2.97	2.85	3.16	3.03	3.54	3.35	3.67	3.29
	12			2.30	2.21	2.74	2.63	2.97	2.85	3.15	3.02	3.52	3.34	3.66	3.28
	14			2.30	2.21	2.74	2.63	2.97	2.85	3.15	3.02	3.51	3.34	3.64	3.28
	16			2.30	2.21	2.74	2.63	2.97	2.85	3.14	3.01	3.50	3.34	3.63	3.27
	18			2.30	2.21	2.74	2.63	2.97	2.85	3.14	3.01	3.49	3.33	3.61	3.27
	20			2.30	2.21	2.74	2.63	2.97	2.85	3.14	3.01	3.47	3.33	3.59	3.26
	22			2.29	2.20	2.74	2.63	2.97	2.85	3.12	3.00	3.43	3.29	3.54	3.25
	24			2.29	2.20	2.74	2.63	2.97	2.85	3.11	2.99	3.39	3.25	3.50	3.24
	26			2.29	2.20	2.73	2.62	2.94	2.82	3.07	2.95	3.33	3.20	3.44	3.22
	28	2.07	1.99	2.28	2.19	2.72	2.61	2.91	2.79	3.03	2.91	3.28	3.15	3.39	3.20
	30	2.07	1.99	2.28	2.19	2.70	2.59	2.88	2.76	3.00	2.88	3.23	3.10	3.34	3.19
	32	2.07	1.99	2.27	2.18	2.67	2.56	2.86	2.75	2.96	2.84	3.18	3.05	3.29	3.16
	34	2.07	1.99	2.27	2.18	2.66	2.55	2.82	2.71	2.92	2.80	3.11	2.99	3.22	3.09
	35	2.07	1.99	2.26	2.17	2.66	2.55	2.80	2.69	2.89	2.77	3.08	2.96	3.18	3.05
	36	2.07	1.99	2.26	2.17	2.64	2.53	2.79	2.68	2.86	2.75	3.02	2.90	3.12	3.00
	38	2.07	1.99	2.25	2.16	2.60	2.50	2.76	2.65	2.81	2.70	2.91	2.79	3.00	2.88
	39	2.07	1.99	2.25	2.16	2.58	2.48	2.74	2.63	2.78	2.67	2.86	2.75	2.94	2.82
	41	2.07	1.99	2.24	2.15	2.50	2.40	2.63	2.52	2.66	2.55	2.73	2.62	2.80	2.69
	43	2.07	1.99	2.24	2.15	2.43	2.33	2.52	2.42	2.55	2.45	2.60	2.50	2.66	2.55

Heat Mode

Air flow (m³/min)	outdoor temp DB	WB	indoor temp 16℃CDB	18℃CDB	20℃CDB	22℃CDB	24℃CDB
P-Hi 13 (m³/min)	-19.8	-20	1.86	1.86	1.86	1.86	1.86
	-17.8	-18	1.98	1.98	1.98	1.98	1.98
	-15.7	-16	2.09	2.09	2.09	2.09	2.09
	-13.7	-14	2.21	2.21	2.21	2.21	2.21
	-11.7	-12	2.33	2.33	2.33	2.33	2.33
	-9.6	-10	2.45	2.45	2.45	2.45	2.45
	-7.5	-8	2.60	2.60	2.60	2.60	2.60
	-5.5	-6	2.75	2.75	2.75	2.75	2.75
	-3.4	-4	2.85	2.84	2.84	2.81	2.78
	-1.3	-2	2.94	2.94	2.93	2.87	2.82
	0.8	0	3.10	3.06	3.02	2.91	2.80
	3.9	3	3.37	3.25	3.13	2.95	2.78
	7.0	6	3.68	3.44	3.20	2.98	2.75
	10.1	9	3.66	3.42	3.19	2.96	2.73
	13.2	12	3.63	3.40	3.17	2.94	2.70
	16.9	15.5	3.60	3.37	3.14	2.91	2.68

Air flow	Outdoor air temp.	Indoor air temperature 21℃CDB 14℃CWB TC	SHC	23℃CDB 16℃WB TC	SHC	26℃CDB 18℃WB TC	SHC	27℃CDB 19℃WB TC	SHC	28℃CDB 20℃WB TC	SHC	31℃CDB 22℃WB TC	SHC	33℃CDB 24℃WB TC	SHC
Hi 10 (m³/min)	10			2.27	2.18	2.71	2.56	2.94	2.60	3.12	2.63	3.50	2.85	3.63	2.79
	12			2.27	2.18	2.71	2.56	2.94	2.60	3.12	2.63	3.49	2.85	3.62	2.79
	14			2.27	2.18	2.71	2.56	2.94	2.60	3.12	2.63	3.47	2.84	3.60	2.78
	16			2.27	2.18	2.71	2.56	2.94	2.60	3.11	2.62	3.46	2.84	3.59	2.78
	18			2.27	2.18	2.71	2.56	2.94	2.60	3.11	2.62	3.45	2.84	3.57	2.76
	20			2.27	2.18	2.71	2.56	2.94	2.60	3.10	2.62	3.44	2.83	3.55	2.75
	22			2.27	2.18	2.71	2.56	2.94	2.60	3.09	2.62	3.39	2.82	3.51	2.74
	24			2.26	2.17	2.71	2.56	2.94	2.60	3.07	2.61	3.35	2.80	3.46	2.72
	26			2.26	2.17	2.70	2.56	2.91	2.59	3.04	2.60	3.30	2.79	3.40	2.70
	28	2.05	1.97	2.26	2.17	2.69	2.55	2.88	2.58	3.00	2.58	3.24	2.77	3.35	2.69
	30	2.05	1.97	2.25	2.16	2.67	2.55	2.85	2.57	2.97	2.57	3.19	2.73	3.30	2.67
	32	2.05	1.97	2.25	2.16	2.65	2.54	2.83	2.56	2.93	2.56	3.14	2.72	3.25	2.66
	34	2.05	1.97	2.24	2.15	2.64	2.53	2.79	2.55	2.89	2.54	3.08	2.69	3.18	2.64
	35	2.05	1.97	2.24	2.15	2.63	2.52	2.77	2.54	2.86	2.53	3.04	2.68	3.15	2.63
	36	2.05	1.97	2.24	2.15	2.61	2.51	2.76	2.54	2.83	2.52	2.99	2.66	3.09	2.61
	38	2.05	1.97	2.23	2.14	2.57	2.47	2.73	2.53	2.78	2.50	2.88	2.63	2.97	2.57
	39	2.05	1.97	2.23	2.14	2.55	2.45	2.71	2.52	2.75	2.49	2.83	2.61	2.91	2.55
	41	2.05	1.97	2.22	2.13	2.48	2.38	2.60	2.48	2.64	2.45	2.70	2.57	2.77	2.51
	43	2.05	1.97	2.21	2.12	2.40	2.30	2.49	2.39	2.52	2.41	2.58	2.48	2.63	2.47

Air flow (m³/min)	outdoor temp DB	WB	indoor temp 16℃CDB	18℃CDB	20℃CDB	22℃CDB	24℃CDB
Hi 10 (m³/min)	-19.8	-20	1.83	1.83	1.83	1.83	1.83
	-17.8	-18	1.94	1.94	1.94	1.94	1.94
	-15.7	-16	2.06	2.06	2.06	2.06	2.06
	-13.7	-14	2.18	2.18	2.18	2.18	2.18
	-11.7	-12	2.30	2.30	2.30	2.30	2.30
	-9.6	-10	2.42	2.42	2.42	2.42	2.42
	-7.5	-8	2.56	2.56	2.56	2.56	2.56
	-5.5	-6	2.71	2.71	2.71	2.71	2.71
	-3.4	-4	2.80	2.80	2.80	2.77	2.74
	-1.3	-2	2.90	2.89	2.88	2.83	2.77
	0.8	0	3.06	3.01	2.97	2.86	2.76
	3.9	3	3.32	3.20	3.08	2.91	2.73
	7.0	6	3.62	3.39	3.15	2.93	2.71
	10.1	9	3.60	3.37	3.14	2.91	2.69
	13.2	12	3.58	3.35	3.12	2.89	2.66
	16.9	15.5	3.55	3.32	3.09	2.86	2.63

Air flow	Outdoor air temp.	Indoor air temperature 21℃CDB 14℃CWB TC	SHC	23℃CDB 16℃WB TC	SHC	26℃CDB 18℃WB TC	SHC	27℃CDB 19℃WB TC	SHC	28℃CDB 20℃WB TC	SHC	31℃CDB 22℃WB TC	SHC	33℃CDB 24℃WB TC	SHC
Me 9 (m³/min)	10			2.21	2.11	2.64	2.38	2.85	2.43	3.03	2.45	3.40	2.65	3.53	2.60
	12			2.21	2.11	2.64	2.38	2.85	2.43	3.03	2.45	3.39	2.65	3.51	2.59
	14			2.21	2.11	2.64	2.38	2.85	2.43	3.03	2.45	3.37	2.64	3.50	2.59
	16			2.21	2.11	2.64	2.38	2.85	2.43	3.02	2.44	3.36	2.64	3.48	2.58
	18			2.21	2.11	2.64	2.38	2.85	2.43	3.02	2.44	3.35	2.64	3.47	2.58
	20			2.21	2.11	2.64	2.38	2.85	2.43	3.01	2.44	3.34	2.63	3.45	2.57
	22			2.20	2.11	2.63	2.38	2.85	2.43	3.00	2.44	3.29	2.62	3.41	2.56
	24			2.20	2.11	2.63	2.38	2.85	2.43	2.99	2.43	3.25	2.60	3.36	2.54
	26			2.20	2.11	2.62	2.38	2.82	2.41	2.95	2.42	3.20	2.59	3.31	2.53
	28	1.99	1.91	2.20	2.11	2.61	2.37	2.80	2.41	2.91	2.40	3.15	2.57	3.25	2.51
	30	1.99	1.91	2.19	2.10	2.59	2.36	2.77	2.40	2.88	2.39	3.10	2.55	3.21	2.48
	32	1.99	1.91	2.18	2.09	2.57	2.36	2.74	2.38	2.85	2.38	3.05	2.53	3.16	2.46
	34	1.99	1.91	2.18	2.09	2.56	2.35	2.71	2.37	2.80	2.36	2.99	2.51	3.09	2.44
	35	1.99	1.91	2.17	2.08	2.56	2.35	2.69	2.36	2.78	2.36	2.96	2.50	3.06	2.43
	36	1.99	1.91	2.17	2.08	2.54	2.34	2.68	2.36	2.75	2.34	2.90	2.48	3.00	2.41
	38	1.99	1.91	2.17	2.08	2.50	2.33	2.65	2.34	2.70	2.33	2.80	2.43	2.88	2.38
	39	1.99	1.91	2.16	2.07	2.48	2.32	2.64	2.34	2.67	2.32	2.74	2.41	2.82	2.36
	41	1.99	1.91	2.16	2.07	2.40	2.29	2.53	2.30	2.56	2.27	2.62	2.38	2.69	2.32
	43	1.99	1.91	2.15	2.06	2.33	2.24	2.42	2.26	2.45	2.23	2.50	2.34	2.56	2.28

Air flow (m³/min)	outdoor temp DB	WB	indoor temp 16℃CDB	18℃CDB	20℃CDB	22℃CDB	24℃CDB
Me 9 (m³/min)	-19.8	-20	1.76	1.76	1.76	1.76	1.76
	-17.8	-18	1.88	1.88	1.88	1.88	1.88
	-15.7	-16	1.99	1.99	1.99	1.99	1.99
	-13.7	-14	2.10	2.10	2.10	2.10	2.10
	-11.7	-12	2.22	2.22	2.22	2.22	2.22
	-9.6	-10	2.33	2.33	2.33	2.33	2.33
	-7.5	-8	2.47	2.47	2.47	2.47	2.47
	-5.5	-6	2.61	2.61	2.61	2.61	2.61
	-3.4	-4	2.71	2.70	2.70	2.67	2.64
	-1.3	-2	2.80	2.79	2.78	2.73	2.68
	0.8	0	2.95	2.91	2.87	2.76	2.66
	3.9	3	3.20	3.09	2.97	2.80	2.64
	7.0	6	3.50	3.27	3.04	2.83	2.61
	10.1	9	3.47	3.25	3.03	2.81	2.59
	13.2	12	3.45	3.23	3.01	2.79	2.57
	16.9	15.5	3.42	3.20	2.98	2.76	2.54

Air flow	Outdoor air temp.	Indoor air temperature 21℃CDB 14℃CWB TC	SHC	23℃CDB 16℃WB TC	SHC	26℃CDB 18℃WB TC	SHC	27℃CDB 19℃WB TC	SHC	28℃CDB 20℃WB TC	SHC	31℃CDB 22℃WB TC	SHC	33℃CDB 24℃WB TC	SHC
Lo 8 (m³/min)	10			2.08	1.93	2.49	2.18	2.69	2.22	2.86	2.24	3.21	2.43	3.33	2.37
	12			2.08	1.93	2.49	2.18	2.69	2.22	2.86	2.24	3.20	2.42	3.32	2.37
	14			2.08	1.93	2.49	2.18	2.69	2.22	2.86	2.24	3.19	2.42	3.30	2.36
	16			2.08	1.93	2.49	2.18	2.69	2.22	2.85	2.23	3.17	2.41	3.29	2.36
	18			2.08	1.93	2.49	2.18	2.69	2.22	2.85	2.23	3.16	2.41	3.27	2.35
	20			2.08	1.93	2.49	2.18	2.69	2.22	2.85	2.23	3.15	2.40	3.26	2.35
	22			2.08	1.93	2.49	2.18	2.69	2.22	2.83	2.23	3.11	2.39	3.22	2.33
	24			2.08	1.93	2.49	2.18	2.69	2.22	2.82	2.22	3.07	2.38	3.17	2.32
	26			2.07	1.92	2.48	2.18	2.67	2.21	2.79	2.21	3.02	2.36	3.12	2.30
	28	1.88	1.80	2.07	1.92	2.46	2.17	2.64	2.20	2.75	2.20	2.97	2.34	3.07	2.29
	30	1.88	1.80	2.07	1.92	2.44	2.16	2.62	2.19	2.72	2.19	2.93	2.33	3.03	2.27
	32	1.88	1.80	2.06	1.92	2.43	2.15	2.59	2.18	2.69	2.17	2.88	2.31	2.98	2.26
	34	1.88	1.80	2.06	1.92	2.42	2.15	2.56	2.17	2.65	2.16	2.82	2.29	2.92	2.24
	35	1.88	1.80	2.05	1.91	2.41	2.14	2.54	2.16	2.62	2.15	2.79	2.28	2.89	2.23
	36	1.88	1.80	2.05	1.91	2.39	2.14	2.53	2.15	2.60	2.14	2.74	2.26	2.83	2.20
	38	1.88	1.80	2.04	1.91	2.36	2.12	2.50	2.14	2.55	2.12	2.64	2.23	2.72	2.16
	39	1.88	1.80	2.04	1.91	2.34	2.12	2.49	2.14	2.52	2.11	2.59	2.21	2.66	2.14
	41	1.88	1.80	2.03	1.91	2.27	2.09	2.39	2.10	2.42	2.08	2.48	2.16	2.54	2.11
	43	1.88	1.80	2.03	1.91	2.20	2.06	2.29	2.06	2.31	2.03	2.36	2.12	2.41	2.07

Air flow (m³/min)	outdoor temp DB	WB	indoor temp 16℃CDB	18℃CDB	20℃CDB	22℃CDB	24℃CDB
Lo 8 (m³/min)	-19.8	-20	1.67	1.67	1.67	1.67	1.67
	-17.8	-18	1.78	1.78	1.78	1.78	1.78
	-15.7	-16	1.89	1.89	1.89	1.89	1.89
	-13.7	-14	1.99	1.99	1.99	1.99	1.99
	-11.7	-12	2.10	2.10	2.10	2.10	2.10
	-9.6	-10	2.21	2.21	2.21	2.21	2.21
	-7.5	-8	2.34	2.34	2.34	2.34	2.34
	-5.5	-6	2.48	2.48	2.48	2.48	2.48
	-3.4	-4	2.56	2.56	2.56	2.53	2.51
	-1.3	-2	2.65	2.64	2.64	2.58	2.53
	0.8	0	2.79	2.75	2.71	2.62	2.52
	3.9	3	3.03	2.92	2.82	2.66	2.50
	7.0	6	3.31	3.10	2.88	2.68	2.48
	10.1	9	3.29	3.08	2.87	2.66	2.46
	13.2	12	3.27	3.06	2.85	2.64	2.43
	16.9	15.5	3.24	3.03	2.83	2.62	2.41

Note(1) This data shows average statuses out of those possible to occur in the system control.
(Depending on controls, there may be ranges where the operation is not conducted continuously.)
(2) Symbols are as follows
TC :Total cooling capacity(kW)
SHC :Sensible heat capacity(kW)

PJG000Z022

Model **FDUM36KXE6F** Cool Mode

Air flow	Outdoor air temp.	Indoor air temperature 21℃CDB 14℃CWB TC	SHC	23℃CDB 16℃CWB TC	SHC	26℃CDB 18℃CWB TC	SHC	27℃CDB 19℃CWB TC	SHC	28℃CDB 20℃CWB TC	SHC	31℃CDB 22℃CWB TC	SHC	33℃CDB 24℃CWB TC	SHC
P-Hi 13 (m³/min)	10			2.95	2.83	3.53	3.33	3.82	3.38	4.06	3.42	4.55	3.71	4.72	3.63
	12			2.95	2.83	3.53	3.33	3.82	3.38	4.05	3.41	4.53	3.70	4.70	3.63
	14			2.95	2.83	3.53	3.33	3.82	3.38	4.05	3.41	4.51	3.70	4.68	3.62
	16			2.95	2.83	3.53	3.33	3.82	3.38	4.04	3.41	4.50	3.69	4.66	3.59
	18			2.95	2.83	3.53	3.33	3.82	3.38	4.04	3.41	4.48	3.69	4.64	3.58
	20			2.95	2.83	3.53	3.33	3.82	3.38	4.03	3.41	4.47	3.68	4.62	3.58
	22			2.95	2.83	3.53	3.33	3.82	3.38	4.01	3.40	4.41	3.66	4.56	3.56
	24			2.94	2.82	3.52	3.33	3.82	3.38	3.99	3.39	4.35	3.64	4.49	3.54
	26			2.94	2.82	3.51	3.32	3.78	3.37	3.95	3.38	4.28	3.62	4.43	3.52
	28	2.66	2.55	2.94	2.82	3.49	3.32	3.74	3.35	3.90	3.36	4.22	3.60	4.36	3.50
	30	2.66	2.55	2.93	2.81	3.47	3.31	3.71	3.34	3.86	3.35	4.15	3.55	4.29	3.47
	32	2.66	2.55	2.92	2.80	3.44	3.30	3.67	3.33	3.81	3.32	4.09	3.53	4.23	3.46
	34	2.66	2.55	2.91	2.79	3.43	3.29	3.62	3.31	3.75	3.30	4.00	3.50	4.14	3.43
	35	2.66	2.55	2.91	2.79	3.42	3.28	3.60	3.30	3.72	3.29	3.96	3.49	4.09	3.41
	36	2.66	2.55	2.91	2.79	3.39	3.25	3.58	3.29	3.68	3.27	3.89	3.47	4.02	3.39
	38	2.66	2.55	2.90	2.78	3.34	3.21	3.55	3.28	3.61	3.25	3.74	3.42	3.86	3.34
	39	2.66	2.55	2.89	2.77	3.32	3.19	3.53	3.28	3.58	3.24	3.67	3.39	3.78	3.32
	41	2.66	2.55	2.88	2.76	3.22	3.09	3.38	3.22	3.43	3.18	3.51	3.34	3.60	3.27
	43	2.66	2.55	2.87	2.76	3.12	3.00	3.24	3.11	3.28	3.13	3.35	3.22	3.42	3.21

Heat Mode

Air flow (m³/min)	outdoor temp DB	WB	indoor temp 16℃CDB	18℃CDB	20℃CDB	22℃CDB	24℃CDB
P-Hi 13 (m³/min)	-19.8	-20	2.32	2.32	2.32	2.32	2.32
	-17.8	-18	2.47	2.47	2.47	2.47	2.47
	-15.7	-16	2.62	2.62	2.62	2.62	2.62
	-13.7	-14	2.77	2.77	2.77	2.77	2.77
	-11.7	-12	2.92	2.92	2.92	2.92	2.92
	-9.6	-10	3.07	3.07	3.07	3.07	3.07
	-7.5	-8	3.25	3.25	3.25	3.25	3.25
	-5.5	-6	3.44	3.44	3.44	3.44	3.44
	-3.4	-4	3.56	3.56	3.55	3.52	3.48
	-1.3	-2	3.68	3.67	3.66	3.59	3.52
	0.8	0	3.88	3.83	3.77	3.64	3.50
	3.9	3	4.21	4.06	3.91	3.69	3.47
	7.0	6	4.60	4.30	4.00	3.72	3.44
	10.1	9	4.57	4.28	3.99	3.70	3.41
	13.2	12	4.54	4.25	3.96	3.67	3.38
	16.9	15.5	4.51	4.22	3.93	3.64	3.35

Air flow	Outdoor air temp.	Indoor air temperature 21℃CDB 14℃CWB TC	SHC	23℃CDB 16℃CWB TC	SHC	26℃CDB 18℃CWB TC	SHC	27℃CDB 19℃CWB TC	SHC	28℃CDB 20℃CWB TC	SHC	31℃CDB 22℃CWB TC	SHC	33℃CDB 24℃CWB TC	SHC
Hi 10 (m³/min)	10			2.91	2.54	3.48	2.87	3.76	2.93	4.00	2.96	4.48	3.20	4.66	3.13
	12			2.91	2.54	3.48	2.87	3.76	2.93	4.00	2.96	4.47	3.20	4.64	3.12
	14			2.91	2.54	3.48	2.87	3.76	2.93	3.99	2.96	4.45	3.19	4.62	3.11
	16			2.91	2.54	3.48	2.87	3.76	2.93	3.99	2.96	4.44	3.19	4.60	3.11
	18			2.91	2.54	3.48	2.87	3.76	2.93	3.98	2.95	4.42	3.18	4.58	3.10
	20			2.91	2.54	3.48	2.87	3.76	2.93	3.98	2.95	4.40	3.17	4.56	3.09
	22			2.91	2.54	3.48	2.87	3.76	2.93	3.96	2.94	4.35	3.15	4.49	3.07
	24			2.90	2.54	3.48	2.87	3.76	2.93	3.94	2.94	4.29	3.13	4.43	3.05
	26			2.90	2.54	3.46	2.87	3.73	2.92	3.89	2.92	4.22	3.11	4.36	3.03
	28	2.63	2.51	2.90	2.54	3.44	2.86	3.69	2.90	3.85	2.90	4.16	3.08	4.30	3.01
	30	2.63	2.51	2.89	2.53	3.42	2.85	3.66	2.89	3.80	2.88	4.09	3.06	4.23	2.99
	32	2.63	2.51	2.88	2.53	3.39	2.84	3.62	2.87	3.76	2.87	4.03	3.04	4.17	2.97
	34	2.63	2.51	2.87	2.52	3.38	2.83	3.57	2.85	3.70	2.84	3.94	3.01	4.08	2.94
	35	2.63	2.51	2.87	2.52	3.37	2.83	3.55	2.84	3.67	2.83	3.90	2.99	4.04	2.92
	36	2.63	2.51	2.86	2.52	3.35	2.82	3.53	2.84	3.63	2.82	3.83	2.97	3.96	2.90
	38	2.63	2.51	2.86	2.52	3.30	2.80	3.50	2.82	3.56	2.79	3.69	2.92	3.80	2.85
	39	2.63	2.51	2.85	2.51	3.27	2.79	3.48	2.82	3.53	2.78	3.62	2.90	3.72	2.82
	41	2.63	2.51	2.84	2.51	3.17	2.75	3.34	2.76	3.38	2.72	3.46	2.84	3.55	2.75
	43	2.63	2.51	2.83	2.51	3.07	2.71	3.20	2.71	3.23	2.67	3.30	2.79	3.38	2.70

Air flow (m³/min)	outdoor temp DB	WB	indoor temp 16℃CDB	18℃CDB	20℃CDB	22℃CDB	24℃CDB
Hi 10 (m³/min)	-19.8	-20	2.28	2.28	2.28	2.28	2.28
	-17.8	-18	2.43	2.43	2.43	2.43	2.43
	-15.7	-16	2.57	2.57	2.57	2.57	2.57
	-13.7	-14	2.72	2.72	2.72	2.72	2.72
	-11.7	-12	2.87	2.87	2.87	2.87	2.87
	-9.6	-10	3.01	3.01	3.01	3.01	3.01
	-7.5	-8	3.20	3.20	3.20	3.20	3.20
	-5.5	-6	3.38	3.38	3.38	3.38	3.38
	-3.4	-4	3.50	3.49	3.49	3.45	3.42
	-1.3	-2	3.62	3.61	3.60	3.53	3.46
	0.8	0	3.81	3.76	3.70	3.57	3.44
	3.9	3	4.14	3.99	3.84	3.63	3.41
	7.0	6	4.52	4.22	3.93	3.65	3.38
	10.1	9	4.49	4.20	3.92	3.63	3.35
	13.2	12	4.46	4.18	3.89	3.61	3.32
	16.9	15.5	4.43	4.14	3.86	3.57	3.29

Air flow	Outdoor air temp.	Indoor air temperature 21℃CDB 14℃CWB TC	SHC	23℃CDB 16℃CWB TC	SHC	26℃CDB 18℃CWB TC	SHC	27℃CDB 19℃CWB TC	SHC	28℃CDB 20℃CWB TC	SHC	31℃CDB 22℃CWB TC	SHC	33℃CDB 24℃CWB TC	SHC
Me 9 (m³/min)	10			2.79	2.36	3.33	2.67	3.60	2.72	3.83	2.75	4.30	2.98	4.46	2.90
	12			2.79	2.36	3.33	2.67	3.60	2.72	3.83	2.75	4.28	2.97	4.44	2.90
	14			2.79	2.36	3.33	2.67	3.60	2.72	3.82	2.75	4.26	2.96	4.42	2.89
	16			2.79	2.36	3.33	2.67	3.60	2.72	3.82	2.75	4.25	2.96	4.40	2.88
	18			2.79	2.36	3.33	2.67	3.60	2.72	3.81	2.75	4.23	2.95	4.38	2.88
	20			2.79	2.36	3.33	2.67	3.60	2.72	3.81	2.75	4.22	2.95	4.36	2.87
	22			2.78	2.36	3.33	2.67	3.60	2.72	3.79	2.74	4.16	2.93	4.30	2.85
	24			2.78	2.36	3.33	2.67	3.60	2.72	3.77	2.73	4.11	2.91	4.24	2.83
	26			2.78	2.36	3.31	2.66	3.57	2.71	3.73	2.71	4.05	2.89	4.18	2.81
	28	2.52	2.33	2.77	2.35	3.30	2.66	3.54	2.70	3.68	2.70	3.98	2.86	4.11	2.79
	30	2.52	2.33	2.77	2.35	3.27	2.64	3.50	2.68	3.64	2.68	3.92	2.84	4.05	2.77
	32	2.52	2.33	2.76	2.35	3.25	2.63	3.47	2.67	3.60	2.66	3.86	2.82	3.99	2.75
	34	2.52	2.33	2.75	2.34	3.24	2.63	3.42	2.65	3.54	2.64	3.78	2.79	3.91	2.72
	35	2.52	2.33	2.75	2.34	3.23	2.63	3.40	2.64	3.51	2.63	3.74	2.77	3.87	2.71
	36	2.52	2.33	2.74	2.34	3.21	2.62	3.38	2.63	3.48	2.62	3.67	2.75	3.79	2.68
	38	2.52	2.33	2.74	2.34	3.16	2.60	3.35	2.62	3.41	2.59	3.54	2.70	3.64	2.63
	39	2.52	2.33	2.73	2.33	3.13	2.59	3.33	2.61	3.38	2.58	3.47	2.68	3.57	2.61
	41	2.52	2.33	2.72	2.33	3.04	2.55	3.20	2.56	3.24	2.53	3.31	2.62	3.40	2.56
	43	2.52	2.33	2.71	2.33	2.94	2.51	3.06	2.51	3.09	2.47	3.16	2.57	3.23	2.49

Air flow (m³/min)	outdoor temp DB	WB	indoor temp 16℃CDB	18℃CDB	20℃CDB	22℃CDB	24℃CDB
Me 9 (m³/min)	-19.8	-20	2.18	2.18	2.18	2.18	2.18
	-17.8	-18	2.32	2.32	2.32	2.32	2.32
	-15.7	-16	2.46	2.46	2.46	2.46	2.46
	-13.7	-14	2.60	2.60	2.60	2.60	2.60
	-11.7	-12	2.74	2.74	2.74	2.74	2.74
	-9.6	-10	2.88	2.88	2.88	2.88	2.88
	-7.5	-8	3.05	3.05	3.05	3.05	3.05
	-5.5	-6	3.23	3.23	3.23	3.23	3.23
	-3.4	-4	3.34	3.33	3.33	3.30	3.26
	-1.3	-2	3.45	3.44	3.43	3.37	3.30
	0.8	0	3.64	3.59	3.53	3.41	3.28
	3.9	3	3.95	3.81	3.67	3.46	3.25
	7.0	6	4.31	4.03	3.75	3.49	3.23
	10.1	9	4.28	4.01	3.74	3.47	3.20
	13.2	12	4.26	3.98	3.71	3.44	3.17
	16.9	15.5	4.22	3.95	3.68	3.41	3.14

Air flow	Outdoor air temp.	Indoor air temperature 21℃CDB 14℃CWB TC	SHC	23℃CDB 16℃CWB TC	SHC	26℃CDB 18℃CWB TC	SHC	27℃CDB 19℃CWB TC	SHC	28℃CDB 20℃CWB TC	SHC	31℃CDB 22℃CWB TC	SHC	33℃CDB 24℃CWB TC	SHC
Lo 8 (m³/min)	10			2.58	2.15	3.09	2.43	3.34	2.48	3.55	2.51	3.98	2.71	4.13	2.64
	12			2.58	2.15	3.09	2.43	3.34	2.48	3.55	2.51	3.96	2.70	4.11	2.63
	14			2.58	2.15	3.09	2.43	3.34	2.48	3.54	2.50	3.95	2.70	4.10	2.63
	16			2.58	2.15	3.09	2.43	3.34	2.48	3.54	2.50	3.94	2.69	4.08	2.62
	18			2.58	2.15	3.09	2.43	3.34	2.48	3.53	2.50	3.92	2.68	4.06	2.61
	20			2.58	2.15	3.09	2.43	3.34	2.48	3.53	2.50	3.91	2.68	4.04	2.61
	22			2.58	2.15	3.09	2.43	3.34	2.48	3.51	2.49	3.86	2.66	3.99	2.59
	24			2.57	2.14	3.08	2.42	3.34	2.48	3.50	2.49	3.81	2.64	3.93	2.57
	26			2.57	2.14	3.07	2.42	3.31	2.46	3.45	2.47	3.75	2.62	3.87	2.55
	28	2.33	2.11	2.57	2.14	3.06	2.41	3.28	2.45	3.41	2.45	3.69	2.60	3.81	2.53
	30	2.33	2.11	2.56	2.14	3.03	2.40	3.24	2.44	3.37	2.43	3.63	2.58	3.75	2.51
	32	2.33	2.11	2.56	2.14	3.01	2.39	3.21	2.42	3.33	2.42	3.58	2.56	3.70	2.49
	34	2.33	2.11	2.55	2.13	3.00	2.39	3.17	2.41	3.28	2.40	3.50	2.53	3.62	2.47
	35	2.33	2.11	2.55	2.13	2.99	2.38	3.15	2.40	3.25	2.39	3.46	2.51	3.58	2.45
	36	2.33	2.11	2.54	2.12	2.97	2.38	3.13	2.39	3.22	2.38	3.40	2.49	3.51	2.43
	38	2.33	2.11	2.54	2.12	2.92	2.35	3.10	2.38	3.16	2.35	3.28	2.45	3.37	2.38
	39	2.33	2.11	2.53	2.12	2.90	2.35	3.09	2.38	3.13	2.34	3.21	2.43	3.30	2.36
	41	2.33	2.11	2.52	2.12	2.82	2.31	2.96	2.32	3.00	2.29	3.07	2.38	3.15	2.31
	43	2.33	2.11	2.51	2.11	2.73	2.28	2.84	2.28	2.87	2.24	2.93	2.33	2.99	2.26

Air flow (m³/min)	outdoor temp DB	WB	indoor temp 16℃CDB	18℃CDB	20℃CDB	22℃CDB	24℃CDB
Lo 8 (m³/min)	-19.8	-20	2.03	2.03	2.03	2.03	2.03
	-17.8	-18	2.16	2.16	2.16	2.16	2.16
	-15.7	-16	2.29	2.29	2.29	2.29	2.29
	-13.7	-14	2.42	2.42	2.42	2.42	2.42
	-11.7	-12	2.55	2.55	2.55	2.55	2.55
	-9.6	-10	2.68	2.68	2.68	2.68	2.68
	-7.5	-8	2.85	2.85	2.85	2.85	2.85
	-5.5	-6	3.01	3.01	3.01	3.01	3.01
	-3.4	-4	3.12	3.11	3.11	3.08	3.05
	-1.3	-2	3.22	3.21	3.20	3.14	3.08
	0.8	0	3.40	3.35	3.30	3.18	3.06
	3.9	3	3.68	3.55	3.42	3.23	3.04
	7.0	6	4.03	3.76	3.50	3.26	3.01
	10.1	9	4.00	3.74	3.49	3.24	2.98
	13.2	12	3.97	3.72	3.47	3.21	2.96
	16.9	15.5	3.94	3.69	3.43	3.18	2.93

Note(1) This data shows average statuses out of those possible to occur in the system control.
(Depending on controls, there may be ranges where the operation is not conducted continuously.)
(2) Symbols are as follows
TC :Total cooling capacity(kW)
SHC :Sensible heat capacity(kW)

PJG000Z022

Model **FDUM45KXE6F** Cool Mode

Air flow	Outdoor air temp.	Indoor air temperature 21℃CDB 14℃CWB TC	SHC	23℃CDB 16℃WB TC	SHC	26℃CDB 18℃WB TC	SHC	27℃CDB 19℃WB TC	SHC	28℃CDB 20℃WB TC	SHC	31℃CDB 22℃WB TC	SHC	33℃CDB 24℃WB TC	SHC
P-Hi 13 (m³/min)	10			3.69	3.26	4.41	3.69	4.77	3.76	5.07	3.80	5.68	4.11	5.90	4.01
	12			3.69	3.26	4.41	3.69	4.77	3.76	5.07	3.80	5.66	4.10	5.88	4.00
	14			3.69	3.26	4.41	3.69	4.77	3.76	5.06	3.79	5.64	4.09	5.85	4.00
	16			3.69	3.26	4.41	3.69	4.77	3.76	5.05	3.79	5.62	4.09	5.83	3.99
	18			3.69	3.26	4.41	3.69	4.77	3.76	5.05	3.79	5.60	4.08	5.80	3.98
	20			3.69	3.26	4.41	3.69	4.77	3.76	5.04	3.79	5.58	4.07	5.78	3.97
	22			3.68	3.26	4.41	3.69	4.77	3.76	5.02	3.78	5.51	4.05	5.70	3.95
	24			3.68	3.26	4.41	3.69	4.77	3.76	4.99	3.77	5.44	4.02	5.62	3.92
	26			3.68	3.26	4.39	3.68	4.73	3.74	4.93	3.74	5.35	3.99	5.53	3.89
	28	3.33	3.20	3.67	3.25	4.37	3.67	4.68	3.72	4.88	3.72	5.27	3.96	5.44	3.86
	30	3.33	3.20	3.66	3.25	4.33	3.66	4.64	3.71	4.82	3.70	5.19	3.93	5.36	3.84
	32	3.33	3.20	3.65	3.25	4.30	3.64	4.59	3.69	4.76	3.68	5.11	3.90	5.28	3.81
	34	3.33	3.20	3.64	3.24	4.28	3.64	4.53	3.66	4.69	3.65	5.00	3.87	5.17	3.77
	35	3.33	3.20	3.64	3.24	4.28	3.64	4.50	3.65	4.65	3.64	4.95	3.85	5.12	3.76
	36	3.33	3.20	3.63	3.24	4.24	3.62	4.48	3.64	4.60	3.62	4.86	3.82	5.02	3.73
	38	3.33	3.20	3.62	3.23	4.18	3.60	4.43	3.62	4.52	3.59	4.68	3.75	4.82	3.66
	39	3.33	3.20	3.62	3.23	4.15	3.58	4.41	3.62	4.47	3.57	4.59	3.72	4.72	3.63
	41	3.33	3.20	3.61	3.23	4.02	3.53	4.23	3.55	4.28	3.50	4.39	3.66	4.50	3.54
	43	3.33	3.20	3.59	3.22	3.90	3.48	4.05	3.48	4.09	3.43	4.18	3.59	4.28	3.47

Heat Mode

Air flow (m³/min)	outdoor temp DB	WB	indoor temp 16℃CDB	18℃CDB	20℃CDB	22℃CDB	24℃CDB
P-Hi 13 (m³/min)	-19.8	-20	2.90	2.90	2.90	2.90	2.90
	-17.8	-18	3.09	3.09	3.09	3.09	3.09
	-15.7	-16	3.27	3.27	3.27	3.27	3.27
	-13.7	-14	3.46	3.46	3.46	3.46	3.46
	-11.7	-12	3.65	3.65	3.65	3.65	3.65
	-9.6	-10	3.83	3.83	3.83	3.83	3.83
	-7.5	-8	4.07	4.07	4.07	4.07	4.07
	-5.5	-6	4.30	4.30	4.30	4.30	4.30
	-3.4	-4	4.45	4.44	4.44	4.39	4.35
	-1.3	-2	4.60	4.59	4.58	4.49	4.40
	0.8	0	4.85	4.78	4.71	4.54	4.38
	3.9	3	5.26	5.08	4.89	4.61	4.34
	7.0	6	5.75	5.38	5.00	4.65	4.30
	10.1	9	5.71	5.35	4.98	4.62	4.26
	13.2	12	5.68	5.31	4.95	4.59	4.23
	16.9	15.5	5.63	5.27	4.91	4.54	4.18

Air flow	Outdoor air temp.	Indoor air temperature 21℃CDB 14℃CWB TC	SHC	23℃CDB 16℃WB TC	SHC	26℃CDB 18℃WB TC	SHC	27℃CDB 19℃WB TC	SHC	28℃CDB 20℃WB TC	SHC	31℃CDB 22℃WB TC	SHC	33℃CDB 24℃WB TC	SHC
Hi 10 (m³/min)	10			3.58	2.84	4.28	3.21	4.63	3.29	4.93	3.33	5.52	3.60	5.73	3.50
	12			3.58	2.84	4.28	3.21	4.63	3.29	4.92	3.33	5.50	3.59	5.71	3.50
	14			3.58	2.84	4.28	3.21	4.63	3.29	4.91	3.33	5.48	3.58	5.68	3.49
	16			3.58	2.84	4.28	3.21	4.63	3.29	4.91	3.33	5.46	3.58	5.66	3.48
	18			3.58	2.84	4.28	3.21	4.63	3.29	4.90	3.32	5.44	3.57	5.63	3.47
	20			3.58	2.84	4.28	3.21	4.63	3.29	4.90	3.32	5.42	3.56	5.61	3.46
	22			3.58	2.84	4.28	3.21	4.63	3.29	4.87	3.31	5.35	3.53	5.53	3.43
	24			3.57	2.84	4.28	3.21	4.63	3.29	4.85	3.30	5.28	3.51	5.46	3.41
	26			3.57	2.84	4.26	3.20	4.59	3.27	4.79	3.28	5.20	3.47	5.37	3.37
	28	3.23	2.79	3.57	2.84	4.24	3.19	4.54	3.25	4.74	3.25	5.12	3.44	5.29	3.35
	30	3.23	2.79	3.56	2.83	4.21	3.18	4.50	3.23	4.68	3.23	5.04	3.41	5.21	3.32
	32	3.23	2.79	3.55	2.83	4.17	3.16	4.46	3.21	4.63	3.21	4.96	3.38	5.13	3.29
	34	3.23	2.79	3.54	2.82	4.16	3.16	4.40	3.19	4.55	3.18	4.86	3.34	5.02	3.25
	35	3.23	2.79	3.53	2.82	4.15	3.15	4.37	3.18	4.51	3.16	4.80	3.32	4.97	3.23
	36	3.23	2.79	3.53	2.82	4.12	3.14	4.35	3.17	4.47	3.15	4.72	3.29	4.87	3.20
	38	3.23	2.79	3.52	2.81	4.06	3.12	4.30	3.15	4.38	3.11	4.54	3.22	4.68	3.13
	39	3.23	2.79	3.51	2.81	4.03	3.10	4.28	3.14	4.34	3.09	4.46	3.19	4.58	3.10
	41	3.23	2.79	3.50	2.80	3.91	3.05	4.11	3.07	4.16	3.02	4.26	3.12	4.37	3.03
	43	3.23	2.79	3.49	2.80	3.78	3.00	3.93	3.00	3.98	2.95	4.06	3.05	4.15	2.96

Air flow (m³/min)	outdoor temp DB	WB	indoor temp 16℃CDB	18℃CDB	20℃CDB	22℃CDB	24℃CDB
Hi 10 (m³/min)	-19.8	-20	2.80	2.80	2.80	2.80	2.80
	-17.8	-18	2.98	2.98	2.98	2.98	2.98
	-15.7	-16	3.16	3.16	3.16	3.16	3.16
	-13.7	-14	3.34	3.34	3.34	3.34	3.34
	-11.7	-12	3.52	3.52	3.52	3.52	3.52
	-9.6	-10	3.70	3.70	3.70	3.70	3.70
	-7.5	-8	3.93	3.93	3.93	3.93	3.93
	-5.5	-6	4.15	4.15	4.15	4.15	4.15
	-3.4	-4	4.30	4.29	4.29	4.24	4.20
	-1.3	-2	4.44	4.43	4.42	4.33	4.25
	0.8	0	4.69	4.62	4.55	4.39	4.23
	3.9	3	5.08	4.90	4.72	4.46	4.19
	7.0	6	5.55	5.19	4.83	4.49	4.15
	10.1	9	5.52	5.17	4.81	4.46	4.12
	13.2	12	5.48	5.13	4.78	4.43	4.08
	16.9	15.5	5.44	5.09	4.74	4.39	4.04

Air flow	Outdoor air temp.	Indoor air temperature 21℃CDB 14℃CWB TC	SHC	23℃CDB 16℃WB TC	SHC	26℃CDB 18℃WB TC	SHC	27℃CDB 19℃WB TC	SHC	28℃CDB 20℃WB TC	SHC	31℃CDB 22℃WB TC	SHC	33℃CDB 24℃WB TC	SHC
Me 9 (m³/min)	10			3.34	2.61	4.00	2.95	4.32	3.02	4.60	3.07	5.15	3.31	5.35	3.22
	12			3.34	2.61	4.00	2.95	4.32	3.02	4.60	3.07	5.14	3.31	5.33	3.22
	14			3.34	2.61	4.00	2.95	4.32	3.02	4.59	3.07	5.12	3.30	5.31	3.21
	16			3.34	2.61	4.00	2.95	4.32	3.02	4.58	3.06	5.10	3.29	5.28	3.20
	18			3.34	2.61	4.00	2.95	4.32	3.02	4.58	3.06	5.08	3.28	5.26	3.19
	20			3.34	2.61	4.00	2.95	4.32	3.02	4.57	3.06	5.06	3.28	5.24	3.18
	22			3.34	2.61	4.00	2.95	4.32	3.02	4.55	3.05	5.00	3.25	5.16	3.15
	24			3.33	2.60	3.99	2.95	4.32	3.02	4.53	3.04	4.93	3.22	5.09	3.13
	26			3.33	2.60	3.98	2.95	4.28	3.01	4.47	3.02	4.86	3.20	5.02	3.10
	28	3.02	2.57	3.33	2.60	3.96	2.94	4.24	2.99	4.42	2.99	4.78	3.17	4.94	3.08
	30	3.02	2.57	3.32	2.60	3.93	2.92	4.20	2.97	4.37	2.97	4.70	3.13	4.86	3.05
	32	3.02	2.57	3.31	2.60	3.90	2.91	4.16	2.95	4.32	2.95	4.63	3.11	4.79	3.02
	34	3.02	2.57	3.30	2.59	3.88	2.90	4.11	2.93	4.25	2.92	4.53	3.07	4.69	2.99
	35	3.02	2.57	3.30	2.59	3.88	2.90	4.08	2.92	4.21	2.91	4.48	3.05	4.64	2.97
	36	3.02	2.57	3.29	2.59	3.85	2.89	4.06	2.91	4.17	2.89	4.40	3.02	4.55	2.93
	38	3.02	2.57	3.28	2.58	3.79	2.86	4.02	2.90	4.09	2.86	4.24	2.96	4.37	2.87
	39	3.02	2.57	3.28	2.58	3.76	2.85	4.00	2.89	4.05	2.84	4.16	2.93	4.28	2.84
	41	3.02	2.57	3.27	2.58	3.65	2.80	3.84	2.82	3.88	2.77	3.98	2.86	4.08	2.78
	43	3.02	2.57	3.26	2.57	3.53	2.75	3.67	2.75	3.71	2.71	3.79	2.79	3.88	2.71

Air flow (m³/min)	outdoor temp DB	WB	indoor temp 16℃CDB	18℃CDB	20℃CDB	22℃CDB	24℃CDB
Me 9 (m³/min)	-19.8	-20	2.60	2.60	2.60	2.60	2.60
	-17.8	-18	2.77	2.77	2.77	2.77	2.77
	-15.7	-16	2.94	2.94	2.94	2.94	2.94
	-13.7	-14	3.11	3.11	3.11	3.11	3.11
	-11.7	-12	3.27	3.27	3.27	3.27	3.27
	-9.6	-10	3.44	3.44	3.44	3.44	3.44
	-7.5	-8	3.65	3.65	3.65	3.65	3.65
	-5.5	-6	3.86	3.86	3.86	3.86	3.86
	-3.4	-4	4.00	3.99	3.98	3.95	3.91
	-1.3	-2	4.13	4.12	4.11	4.03	3.95
	0.8	0	4.36	4.29	4.23	4.08	3.93
	3.9	3	4.73	4.56	4.39	4.14	3.90
	7.0	6	5.16	4.83	4.49	4.18	3.86
	10.1	9	5.13	4.80	4.47	4.15	3.83
	13.2	12	5.10	4.77	4.45	4.12	3.79
	16.9	15.5	5.06	4.73	4.41	4.08	3.75

Air flow	Outdoor air temp.	Indoor air temperature 21℃CDB 14℃CWB TC	SHC	23℃CDB 16℃WB TC	SHC	26℃CDB 18℃WB TC	SHC	27℃CDB 19℃WB TC	SHC	28℃CDB 20℃WB TC	SHC	31℃CDB 22℃WB TC	SHC	33℃CDB 24℃WB TC	SHC
Lo 8 (m³/min)	10			3.13	2.39	3.74	2.71	4.05	2.78	4.31	2.82	4.83	3.04	5.01	2.96
	12			3.13	2.39	3.74	2.71	4.05	2.78	4.30	2.82	4.81	3.04	4.99	2.95
	14			3.13	2.39	3.74	2.71	4.05	2.78	4.30	2.82	4.79	3.03	4.97	2.94
	16			3.13	2.39	3.74	2.71	4.05	2.78	4.29	2.82	4.77	3.02	4.95	2.94
	18			3.13	2.39	3.74	2.71	4.05	2.78	4.28	2.81	4.76	3.02	4.92	2.93
	20			3.13	2.39	3.74	2.71	4.05	2.78	4.28	2.81	4.74	3.01	4.90	2.92
	22			3.13	2.39	3.74	2.71	4.05	2.78	4.26	2.80	4.68	2.98	4.84	2.90
	24			3.12	2.39	3.74	2.71	4.05	2.78	4.24	2.79	4.62	2.96	4.77	2.87
	26			3.12	2.39	3.72	2.70	4.01	2.77	4.19	2.77	4.55	2.93	4.70	2.84
	28	2.83	2.36	3.12	2.39	3.71	2.69	3.97	2.75	4.14	2.75	4.47	2.90	4.62	2.82
	30	2.83	2.36	3.11	2.38	3.68	2.68	3.93	2.73	4.09	2.73	4.40	2.87	4.55	2.79
	32	2.83	2.36	3.10	2.38	3.65	2.67	3.90	2.71	4.04	2.71	4.34	2.85	4.48	2.77
	34	2.83	2.36	3.09	2.37	3.64	2.66	3.85	2.69	3.98	2.69	4.24	2.81	4.39	2.73
	35	2.83	2.36	3.09	2.37	3.63	2.66	3.82	2.68	3.95	2.67	4.20	2.79	4.34	2.72
	36	2.83	2.36	3.08	2.37	3.60	2.65	3.80	2.67	3.91	2.65	4.12	2.76	4.26	2.69
	38	2.83	2.36	3.08	2.37	3.55	2.62	3.76	2.65	3.83	2.62	3.97	2.70	4.09	2.62
	39	2.83	2.36	3.07	2.37	3.52	2.61	3.74	2.64	3.79	2.60	3.90	2.68	4.01	2.60
	41	2.83	2.36	3.06	2.36	3.41	2.56	3.59	2.58	3.64	2.54	3.72	2.61	3.82	2.53
	43	2.83	2.36	3.05	2.36	3.31	2.52	3.44	2.52	3.48	2.48	3.55	2.55	3.63	2.47

Air flow (m³/min)	outdoor temp DB	WB	indoor temp 16℃CDB	18℃CDB	20℃CDB	22℃CDB	24℃CDB
Lo 8 (m³/min)	-19.8	-20	2.44	2.44	2.44	2.44	2.44
	-17.8	-18	2.60	2.60	2.60	2.60	2.60
	-15.7	-16	2.76	2.76	2.76	2.76	2.76
	-13.7	-14	2.91	2.91	2.91	2.91	2.91
	-11.7	-12	3.07	3.07	3.07	3.07	3.07
	-9.6	-10	3.23	3.23	3.23	3.23	3.23
	-7.5	-8	3.42	3.42	3.42	3.42	3.42
	-5.5	-6	3.62	3.62	3.62	3.62	3.62
	-3.4	-4	3.75	3.74	3.74	3.70	3.66
	-1.3	-2	3.87	3.86	3.85	3.78	3.70
	0.8	0	4.08	4.03	3.97	3.83	3.68
	3.9	3	4.43	4.27	4.12	3.88	3.65
	7.0	6	4.84	4.53	4.21	3.92	3.62
	10.1	9	4.81	4.50	4.19	3.89	3.59
	13.2	12	4.78	4.47	4.17	3.86	3.56
	16.9	15.5	4.74	4.44	4.13	3.83	3.52

Note(1) This data shows average statuses out of those possible to occur in the system control.
(Depending on controls, there may be ranges where the operation is not conducted continuously.)
(2) Symbols are as follows
TC :Total cooling capacity(kW)
SHC :Sensible heat capacity(kW)

PJG000Z022

Model **FDUM56KXE6F** Cool Mode

Air flow	Outdoor air temp.	Indoor air temperature 21℃CDB 14℃CWB TC	SHC	23℃CDB 16℃CWB TC	SHC	26℃CDB 18℃CWB TC	SHC	27℃CDB 19℃CWB TC	SHC	28℃CDB 20℃CWB TC	SHC	31℃CDB 22℃CWB TC	SHC	33℃CDB 24℃CWB TC	SHC
P-Hi 13 (m³/min)	10			4.59	3.66	5.49	4.14	5.94	4.24	6.32	4.30	7.07	4.64	7.35	4.52
	12			4.59	3.66	5.49	4.14	5.94	4.24	6.31	4.29	7.05	4.63	7.31	4.50
	14			4.59	3.66	5.49	4.14	5.94	4.24	6.30	4.29	7.02	4.62	7.28	4.49
	16			4.59	3.66	5.49	4.14	5.94	4.24	6.29	4.28	7.00	4.61	7.25	4.48
	18			4.59	3.66	5.49	4.14	5.94	4.24	6.28	4.28	6.97	4.60	7.22	4.47
	20			4.59	3.66	5.49	4.14	5.94	4.24	6.27	4.28	6.95	4.59	7.19	4.46
	22			4.58	3.66	5.49	4.14	5.94	4.24	6.24	4.26	6.86	4.56	7.09	4.43
	24			4.58	3.66	5.48	4.14	5.94	4.24	6.21	4.25	6.77	4.52	6.99	4.39
	26			4.57	3.65	5.46	4.13	5.88	4.21	6.14	4.22	6.66	4.48	6.88	4.35
	28	4.14	3.60	4.57	3.65	5.43	4.12	5.82	4.19	6.07	4.19	6.56	4.44	6.78	4.32
	30	4.14	3.60	4.56	3.65	5.39	4.10	5.77	4.17	6.00	4.17	6.46	4.40	6.67	4.27
	32	4.14	3.60	4.55	3.65	5.35	4.08	5.71	4.14	5.93	4.14	6.36	4.36	6.57	4.24
	34	4.14	3.60	4.53	3.64	5.33	4.07	5.64	4.11	5.83	4.10	6.22	4.31	6.44	4.19
	35	4.14	3.60	4.52	3.63	5.32	4.07	5.60	4.10	5.79	4.08	6.16	4.28	6.37	4.17
	36	4.14	3.60	4.52	3.63	5.28	4.05	5.57	4.08	5.73	4.06	6.05	4.24	6.25	4.13
	38	4.14	3.60	4.51	3.63	5.20	4.02	5.52	4.06	5.62	4.01	5.82	4.16	6.00	4.05
	39	4.14	3.60	4.50	3.62	5.16	4.00	5.49	4.05	5.56	3.99	5.71	4.12	5.87	4.00
	41	4.14	3.60	4.49	3.62	5.00	3.93	5.26	3.96	5.33	3.90	5.46	4.03	5.60	3.91
	43	4.14	3.60	4.47	3.61	4.85	3.87	5.04	3.87	5.10	3.81	5.21	3.94	5.32	3.82

Heat Mode

Air flow (m³/min)	outdoor temp DB	WB	indoor temp 16℃CDB	18℃CDB	20℃CDB	22℃CDB	24℃CDB
P-Hi 13 (m³/min)	-19.8	-20	3.65	3.65	3.65	3.65	3.65
	-17.8	-18	3.89	3.89	3.89	3.89	3.89
	-15.7	-16	4.12	4.12	4.12	4.12	4.12
	-13.7	-14	4.36	4.36	4.36	4.36	4.36
	-11.7	-12	4.59	4.59	4.59	4.59	4.59
	-9.6	-10	4.83	4.83	4.83	4.83	4.83
	-7.5	-8	5.12	5.12	5.12	5.12	5.12
	-5.5	-6	5.42	5.42	5.42	5.42	5.42
	-3.4	-4	5.61	5.60	5.59	5.54	5.48
	-1.3	-2	5.80	5.78	5.76	5.65	5.54
	0.8	0	6.11	6.02	5.94	5.73	5.51
	3.9	3	6.63	6.39	6.16	5.81	5.47
	7.0	6	7.25	6.77	6.30	5.86	5.42
	10.1	9	7.20	6.74	6.28	5.82	5.37
	13.2	12	7.15	6.69	6.24	5.78	5.32
	16.9	15.5	7.10	6.64	6.18	5.73	5.27

Air flow	Outdoor air temp.	Indoor air temperature 21℃CDB 14℃CWB TC	SHC	23℃CDB 16℃CWB TC	SHC	26℃CDB 18℃CWB TC	SHC	27℃CDB 19℃CWB TC	SHC	28℃CDB 20℃CWB TC	SHC	31℃CDB 22℃CWB TC	SHC	33℃CDB 24℃CWB TC	SHC
Hi 10 (m³/min)	10			4.41	3.23	5.27	3.66	5.70	3.77	6.07	3.83	6.80	4.13	7.06	4.01
	12			4.41	3.23	5.27	3.66	5.70	3.77	6.06	3.83	6.77	4.12	7.03	4.00
	14			4.41	3.23	5.27	3.66	5.70	3.77	6.05	3.82	6.75	4.11	7.00	3.99
	16			4.41	3.23	5.27	3.66	5.70	3.77	6.04	3.82	6.72	4.10	6.97	3.97
	18			4.41	3.23	5.27	3.66	5.70	3.77	6.03	3.81	6.70	4.09	6.94	3.96
	20			4.41	3.23	5.27	3.66	5.70	3.77	6.03	3.81	6.67	4.08	6.90	3.95
	22			4.40	3.22	5.27	3.66	5.70	3.77	6.00	3.80	6.59	4.04	6.81	3.91
	24			4.40	3.22	5.27	3.66	5.70	3.77	5.97	3.79	6.50	4.00	6.72	3.88
	26			4.39	3.22	5.24	3.65	5.65	3.74	5.90	3.76	6.40	3.96	6.61	3.83
	28	3.98	3.16	4.39	3.22	5.22	3.64	5.60	3.72	5.83	3.72	6.30	3.92	6.51	3.80
	30	3.98	3.16	4.38	3.21	5.18	3.62	5.54	3.69	5.76	3.69	6.20	3.87	6.41	3.75
	32	3.98	3.16	4.37	3.21	5.14	3.60	5.49	3.67	5.69	3.66	6.11	3.84	6.31	3.72
	34	3.98	3.16	4.35	3.20	5.12	3.59	5.42	3.64	5.60	3.62	5.98	3.78	6.18	3.67
	35	3.98	3.16	4.35	3.20	5.11	3.59	5.38	3.62	5.56	3.61	5.91	3.75	6.12	3.65
	36	3.98	3.16	4.34	3.19	5.07	3.57	5.35	3.61	5.50	3.58	5.81	3.71	6.00	3.60
	38	3.98	3.16	4.33	3.19	5.00	3.54	5.30	3.58	5.40	3.54	5.60	3.63	5.76	3.51
	39	3.98	3.16	4.33	3.19	4.96	3.52	5.27	3.57	5.34	3.51	5.49	3.59	5.64	3.47
	41	3.98	3.16	4.31	3.18	4.81	3.45	5.06	3.48	5.12	3.42	5.25	3.49	5.38	3.38
	43	3.98	3.16	4.30	3.17	4.66	3.38	4.84	3.38	4.90	3.32	5.00	3.39	5.11	3.28

Air flow (m³/min)	outdoor temp DB	WB	indoor temp 16℃CDB	18℃CDB	20℃CDB	22℃CDB	24℃CDB
Hi 10 (m³/min)	-19.8	-20	3.52	3.52	3.52	3.52	3.52
	-17.8	-18	3.75	3.75	3.75	3.75	3.75
	-15.7	-16	3.97	3.97	3.97	3.97	3.97
	-13.7	-14	4.20	4.20	4.20	4.20	4.20
	-11.7	-12	4.43	4.43	4.43	4.43	4.43
	-9.6	-10	4.65	4.65	4.65	4.65	4.65
	-7.5	-8	4.94	4.94	4.94	4.94	4.94
	-5.5	-6	5.22	5.22	5.22	5.22	5.22
	-3.4	-4	5.40	5.39	5.39	5.33	5.28
	-1.3	-2	5.58	5.57	5.55	5.45	5.34
	0.8	0	5.89	5.80	5.72	5.52	5.31
	3.9	3	6.39	6.16	5.93	5.60	5.27
	7.0	6	6.98	6.53	6.07	5.65	5.22
	10.1	9	6.93	6.49	6.05	5.61	5.17
	13.2	12	6.89	6.45	6.01	5.57	5.13
	16.9	15.5	6.84	6.40	5.96	5.52	5.08

Air flow	Outdoor air temp.	Indoor air temperature 21℃CDB 14℃CWB TC	SHC	23℃CDB 16℃CWB TC	SHC	26℃CDB 18℃CWB TC	SHC	27℃CDB 19℃CWB TC	SHC	28℃CDB 20℃CWB TC	SHC	31℃CDB 22℃CWB TC	SHC	33℃CDB 24℃CWB TC	SHC
Me 9 (m³/min)	10			4.11	2.97	4.92	3.38	5.32	3.48	5.66	3.54	6.34	3.81	6.58	3.70
	12			4.11	2.97	4.92	3.38	5.32	3.48	5.65	3.54	6.32	3.81	6.56	3.69
	14			4.11	2.97	4.92	3.38	5.32	3.48	5.65	3.54	6.30	3.80	6.53	3.68
	16			4.11	2.97	4.92	3.38	5.32	3.48	5.64	3.53	6.27	3.78	6.50	3.67
	18			4.11	2.97	4.92	3.38	5.32	3.48	5.63	3.53	6.25	3.78	6.47	3.66
	20			4.11	2.97	4.92	3.38	5.32	3.48	5.62	3.53	6.23	3.77	6.44	3.64
	22			4.11	2.97	4.92	3.38	5.32	3.48	5.60	3.52	6.15	3.73	6.35	3.61
	24			4.10	2.97	4.92	3.38	5.32	3.48	5.57	3.50	6.07	3.70	6.27	3.58
	26			4.10	2.97	4.89	3.37	5.27	3.45	5.51	3.47	5.97	3.65	6.17	3.54
	28	3.71	2.91	4.10	2.97	4.87	3.36	5.22	3.43	5.44	3.44	5.88	3.62	6.07	3.50
	30	3.71	2.91	4.09	2.96	4.83	3.34	5.17	3.41	5.38	3.41	5.79	3.58	5.98	3.46
	32	3.71	2.91	4.08	2.96	4.79	3.32	5.12	3.39	5.31	3.38	5.70	3.54	5.89	3.43
	34	3.71	2.91	4.06	2.95	4.78	3.31	5.05	3.35	5.23	3.34	5.58	3.49	5.77	3.38
	35	3.71	2.91	4.06	2.95	4.77	3.31	5.02	3.34	5.19	3.33	5.52	3.46	5.71	3.36
	36	3.71	2.91	4.05	2.94	4.73	3.29	4.99	3.33	5.14	3.31	5.42	3.42	5.60	3.31
	38	3.71	2.91	4.04	2.94	4.66	3.26	4.94	3.30	5.04	3.26	5.22	3.34	5.38	3.23
	39	3.71	2.91	4.04	2.94	4.63	3.24	4.92	3.29	4.99	3.24	5.12	3.30	5.27	3.19
	41	3.71	2.91	4.02	2.93	4.49	3.18	4.72	3.20	4.78	3.15	4.89	3.21	5.02	3.10
	43	3.71	2.91	4.01	2.92	4.35	3.11	4.52	3.11	4.57	3.06	4.67	3.12	4.77	3.02

Air flow (m³/min)	outdoor temp DB	WB	indoor temp 16℃CDB	18℃CDB	20℃CDB	22℃CDB	24℃CDB
Me 9 (m³/min)	-19.8	-20	3.22	3.22	3.22	3.22	3.22
	-17.8	-18	3.43	3.43	3.43	3.43	3.43
	-15.7	-16	3.64	3.64	3.64	3.64	3.64
	-13.7	-14	3.85	3.85	3.85	3.85	3.85
	-11.7	-12	4.06	4.06	4.06	4.06	4.06
	-9.6	-10	4.26	4.26	4.26	4.26	4.26
	-7.5	-8	4.52	4.52	4.52	4.52	4.52
	-5.5	-6	4.78	4.78	4.78	4.78	4.78
	-3.4	-4	4.95	4.94	4.93	4.89	4.84
	-1.3	-2	5.12	5.10	5.09	4.99	4.89
	0.8	0	5.39	5.32	5.24	5.05	4.87
	3.9	3	5.85	5.64	5.43	5.13	4.82
	7.0	6	6.39	5.98	5.56	5.17	4.78
	10.1	9	6.35	5.95	5.54	5.14	4.74
	13.2	12	6.31	5.91	5.50	5.10	4.70
	16.9	15.5	6.26	5.86	5.46	5.05	4.65

Air flow	Outdoor air temp.	Indoor air temperature 21℃CDB 14℃CWB TC	SHC	23℃CDB 16℃CWB TC	SHC	26℃CDB 18℃CWB TC	SHC	27℃CDB 19℃CWB TC	SHC	28℃CDB 20℃CWB TC	SHC	31℃CDB 22℃CWB TC	SHC	33℃CDB 24℃CWB TC	SHC
Lo 8 (m³/min)	10			3.80	2.71	4.55	3.09	4.92	3.19	5.23	3.24	5.86	3.49	6.09	3.39
	12			3.80	2.71	4.55	3.09	4.92	3.19	5.23	3.24	5.84	3.49	6.06	3.38
	14			3.80	2.71	4.55	3.09	4.92	3.19	5.22	3.24	5.82	3.48	6.03	3.37
	16			3.80	2.71	4.55	3.09	4.92	3.19	5.21	3.23	5.80	3.47	6.01	3.36
	18			3.80	2.71	4.55	3.09	4.92	3.19	5.20	3.23	5.78	3.46	5.98	3.35
	20			3.80	2.71	4.55	3.09	4.92	3.19	5.20	3.23	5.76	3.45	5.95	3.33
	22			3.80	2.71	4.54	3.08	4.92	3.19	5.17	3.21	5.68	3.41	5.87	3.30
	24			3.79	2.71	4.54	3.08	4.92	3.19	5.15	3.20	5.61	3.38	5.79	3.26
	26			3.79	2.71	4.52	3.07	4.87	3.16	5.09	3.18	5.52	3.34	5.70	3.23
	28	3.43	2.66	3.79	2.71	4.50	3.06	4.83	3.14	5.03	3.15	5.43	3.30	5.61	3.19
	30	3.43	2.66	3.78	2.70	4.47	3.05	4.78	3.12	4.97	3.12	5.35	3.27	5.53	3.16
	32	3.43	2.66	3.77	2.70	4.43	3.03	4.73	3.09	4.91	3.09	5.27	3.23	5.45	3.13
	34	3.43	2.66	3.76	2.69	4.42	3.03	4.67	3.06	4.83	3.05	5.16	3.19	5.33	3.08
	35	3.43	2.66	3.75	2.69	4.41	3.02	4.64	3.05	4.79	3.04	5.10	3.16	5.28	3.06
	36	3.43	2.66	3.74	2.68	4.37	3.00	4.62	3.04	4.75	3.02	5.01	3.12	5.18	3.02
	38	3.43	2.66	3.74	2.68	4.31	2.97	4.57	3.02	4.66	2.98	4.83	3.04	4.97	2.94
	39	3.43	2.66	3.73	2.68	4.28	2.96	4.55	3.01	4.61	2.96	4.73	3.00	4.87	2.91
	41	3.43	2.66	3.72	2.67	4.15	2.90	4.36	2.92	4.42	2.87	4.52	2.92	4.64	2.82
	43	3.43	2.66	3.70	2.66	4.02	2.84	4.18	2.84	4.22	2.79	4.31	2.84	4.41	2.74

Air flow (m³/min)	outdoor temp DB	WB	indoor temp 16℃CDB	18℃CDB	20℃CDB	22℃CDB	24℃CDB
Lo 8 (m³/min)	-19.8	-20	3.00	3.00	3.00	3.00	3.00
	-17.8	-18	3.19	3.19	3.19	3.19	3.19
	-15.7	-16	3.38	3.38	3.38	3.38	3.38
	-13.7	-14	3.58	3.58	3.58	3.58	3.58
	-11.7	-12	3.77	3.77	3.77	3.77	3.77
	-9.6	-10	3.96	3.96	3.96	3.96	3.96
	-7.5	-8	4.20	4.20	4.20	4.20	4.20
	-5.5	-6	4.45	4.45	4.45	4.45	4.45
	-3.4	-4	4.60	4.59	4.59	4.54	4.50
	-1.3	-2	4.76	4.74	4.73	4.64	4.55
	0.8	0	5.01	4.94	4.87	4.70	4.52
	3.9	3	5.44	5.25	5.05	4.77	4.48
	7.0	6	5.95	5.56	5.17	4.81	4.45
	10.1	9	5.91	5.53	5.15	4.78	4.41
	13.2	12	5.87	5.49	5.12	4.74	4.37
	16.9	15.5	5.82	5.45	5.07	4.70	4.32

Note(1) This data shows average statuses out of those possible to occur in the system control.
(Depending on controls, there may be ranges where the operation is not conducted continuously.)
(2) Symbols are as follows
TC :Total cooling capacity(kW)
SHC :Sensible heat capacity(kW)

PJG000Z022

Model **FDUM71KXE6F** Cool Mode

Air flow	Outdoor air temp.	Indoor air temperature 21℃CDB 14℃CWB TC	SHC	23℃CDB 16℃CWB TC	SHC	26℃CDB 18℃CWB TC	SHC	27℃CDB 19℃CWB TC	SHC	28℃CDB 20℃CWB TC	SHC	31℃CDB 22℃CWB TC	SHC	33℃CDB 24℃CWB TC	SHC
P-Hi 24 (m³/min)	10			5.82	5.32	6.96	6.01	7.53	6.12	8.01	6.19	8.97	6.70	9.31	6.54
	12			5.82	5.32	6.96	6.01	7.53	6.12	8.00	6.19	8.94	6.69	9.27	6.52
	14			5.82	5.32	6.96	6.01	7.53	6.12	7.99	6.18	8.90	6.68	9.23	6.51
	16			5.82	5.32	6.96	6.01	7.53	6.12	7.97	6.16	8.87	6.67	9.19	6.50
	18			5.82	5.32	6.96	6.01	7.53	6.12	7.96	6.16	8.84	6.66	9.15	6.49
	20			5.82	5.32	6.96	6.01	7.53	6.12	7.95	6.15	8.81	6.63	9.11	6.48
	22			5.81	5.31	6.95	6.00	7.53	6.12	7.92	6.14	8.70	6.60	8.99	6.44
	24			5.80	5.31	6.95	6.00	7.53	6.12	7.88	6.13	8.58	6.56	8.86	6.40
	26			5.80	5.31	6.92	5.99	7.46	6.10	7.79	6.10	8.45	6.51	8.73	6.35
	28	5.25	5.04	5.79	5.31	6.89	5.98	7.38	6.07	7.69	6.06	8.31	6.46	8.59	6.31
	30	5.25	5.04	5.78	5.30	6.83	5.96	7.31	6.03	7.60	6.03	8.19	6.42	8.46	6.27
	32	5.25	5.04	5.77	5.30	6.78	5.94	7.24	6.00	7.51	6.00	8.06	6.38	8.33	6.23
	34	5.25	5.04	5.75	5.29	6.76	5.93	7.15	5.97	7.39	5.94	7.89	6.32	8.16	6.17
	35	5.25	5.04	5.74	5.29	6.75	5.93	7.10	5.95	7.33	5.92	7.80	6.28	8.08	6.14
	36	5.25	5.04	5.73	5.28	6.69	5.91	7.06	5.94	7.26	5.90	7.66	6.23	7.92	6.10
	38	5.25	5.04	5.72	5.28	6.59	5.86	6.99	5.91	7.12	5.85	7.38	6.14	7.61	5.99
	39	5.25	5.04	5.71	5.27	6.54	5.84	6.96	5.90	7.05	5.83	7.24	6.08	7.45	5.95
	41	5.25	5.04	5.69	5.27	6.35	5.77	6.67	5.78	6.76	5.71	6.92	5.98	7.10	5.84
	43	5.25	5.04	5.67	5.26	6.15	5.69	6.39	5.68	6.46	5.61	6.60	5.87	6.75	5.73

Heat Mode

Air flow (m³/min)	outdoor temp DB	WB	indoor temp 16℃CDB	18℃CDB	20℃CDB	22℃CDB	24℃CDB
P-Hi 24 (m³/min)	-19.8	-20	4.64	4.64	4.64	4.64	4.64
	-17.8	-18	4.94	4.94	4.94	4.94	4.94
	-15.7	-16	5.24	5.24	5.24	5.24	5.24
	-13.7	-14	5.54	5.54	5.54	5.54	5.54
	-11.7	-12	5.83	5.83	5.83	5.83	5.83
	-9.6	-10	6.13	6.13	6.13	6.13	6.13
	-7.5	-8	6.51	6.51	6.51	6.51	6.51
	-5.5	-6	6.88	6.88	6.88	6.88	6.88
	-3.4	-4	7.12	7.11	7.10	7.03	6.96
	-1.3	-2	7.36	7.34	7.32	7.18	7.04
	0.8	0	7.76	7.65	7.54	7.27	7.00
	3.9	3	8.42	8.12	7.82	7.38	6.94
	7.0	6	9.20	8.60	8.00	7.44	6.88
	10.1	9	9.14	8.56	7.97	7.40	6.82
	13.2	12	9.08	8.50	7.92	7.34	6.76
	16.9	15.5	9.01	8.43	7.85	7.27	6.69

Air flow	Outdoor air temp.	Indoor air temperature 21℃CDB 14℃CWB TC	SHC	23℃CDB 16℃CWB TC	SHC	26℃CDB 18℃CWB TC	SHC	27℃CDB 19℃CWB TC	SHC	28℃CDB 20℃CWB TC	SHC	31℃CDB 22℃CWB TC	SHC	33℃CDB 24℃CWB TC	SHC
Hi 19 (m³/min)	10			5.65	4.71	6.75	5.33	7.30	5.44	7.77	5.50	8.70	5.95	9.04	5.81
	12			5.65	4.71	6.75	5.33	7.30	5.44	7.76	5.50	8.67	5.94	9.00	5.79
	14			5.65	4.71	6.75	5.33	7.30	5.44	7.75	5.50	8.64	5.93	8.96	5.77
	16			5.65	4.71	6.75	5.33	7.30	5.44	7.74	5.49	8.61	5.92	8.92	5.76
	18			5.65	4.71	6.75	5.33	7.30	5.44	7.73	5.49	8.58	5.91	8.88	5.75
	20			5.65	4.71	6.75	5.33	7.30	5.44	7.72	5.49	8.55	5.90	8.84	5.74
	22			5.64	4.71	6.75	5.33	7.30	5.44	7.68	5.47	8.44	5.85	8.72	5.70
	24			5.63	4.70	6.75	5.33	7.30	5.44	7.65	5.46	8.33	5.81	8.60	5.65
	26			5.63	4.70	6.71	5.30	7.23	5.41	7.56	5.43	8.20	5.77	8.47	5.61
	28	5.10	4.65	5.62	4.70	6.68	5.29	7.17	5.38	7.47	5.39	8.07	5.71	8.34	5.57
	30	5.10	4.65	5.61	4.69	6.63	5.27	7.10	5.36	7.38	5.35	7.94	5.67	8.21	5.51
	32	5.10	4.65	5.59	4.68	6.58	5.25	7.03	5.33	7.29	5.32	7.82	5.63	8.09	5.48
	34	5.10	4.65	5.58	4.68	6.56	5.24	6.94	5.29	7.18	5.28	7.66	5.56	7.92	5.42
	35	5.10	4.65	5.57	4.68	6.55	5.24	6.89	5.27	7.12	5.25	7.57	5.53	7.84	5.40
	36	5.10	4.65	5.56	4.67	6.50	5.22	6.86	5.25	7.05	5.22	7.44	5.49	7.68	5.34
	38	5.10	4.65	5.55	4.67	6.40	5.18	6.79	5.23	6.91	5.17	7.17	5.39	7.38	5.25
	39	5.10	4.65	5.54	4.66	6.35	5.16	6.75	5.21	6.84	5.14	7.03	5.34	7.23	5.19
	41	5.10	4.65	5.52	4.65	6.16	5.08	6.48	5.11	6.56	5.03	6.72	5.23	6.89	5.09
	43	5.10	4.65	5.50	4.65	5.97	5.00	6.20	5.00	6.27	4.92	6.41	5.11	6.55	4.98

Air flow (m³/min)	outdoor temp DB	WB	indoor temp 16℃CDB	18℃CDB	20℃CDB	22℃CDB	24℃CDB
Hi 19 (m³/min)	-19.8	-20	4.49	4.49	4.49	4.49	4.49
	-17.8	-18	4.78	4.78	4.78	4.78	4.78
	-15.7	-16	5.07	5.07	5.07	5.07	5.07
	-13.7	-14	5.36	5.36	5.36	5.36	5.36
	-11.7	-12	5.65	5.65	5.65	5.65	5.65
	-9.6	-10	5.93	5.93	5.93	5.93	5.93
	-7.5	-8	6.30	6.30	6.30	6.30	6.30
	-5.5	-6	6.66	6.66	6.66	6.66	6.66
	-3.4	-4	6.89	6.88	6.87	6.80	6.73
	-1.3	-2	7.12	7.10	7.08	6.95	6.81
	0.8	0	7.51	7.40	7.29	7.03	6.77
	3.9	3	8.15	7.86	7.57	7.14	6.71
	7.0	6	8.90	8.32	7.74	7.20	6.66
	10.1	9	8.84	8.28	7.71	7.15	6.60
	13.2	12	8.78	8.22	7.66	7.10	6.54
	16.9	15.5	8.72	8.16	7.59	7.03	6.47

Air flow	Outdoor air temp.	Indoor air temperature 21℃CDB 14℃CWB TC	SHC	23℃CDB 16℃CWB TC	SHC	26℃CDB 18℃CWB TC	SHC	27℃CDB 19℃CWB TC	SHC	28℃CDB 20℃CWB TC	SHC	31℃CDB 22℃CWB TC	SHC	33℃CDB 24℃CWB TC	SHC
Me 15 (m³/min)	10			5.37	4.17	6.42	4.71	6.94	4.84	7.39	4.91	8.27	5.29	8.59	5.15
	12			5.37	4.17	6.42	4.71	6.94	4.84	7.38	4.91	8.24	5.28	8.55	5.13
	14			5.37	4.17	6.42	4.71	6.94	4.84	7.37	4.90	8.21	5.27	8.52	5.12
	16			5.37	4.17	6.42	4.71	6.94	4.84	7.36	4.90	8.18	5.25	8.48	5.11
	18			5.37	4.17	6.42	4.71	6.94	4.84	7.35	4.89	8.15	5.24	8.44	5.10
	20			5.37	4.17	6.42	4.71	6.94	4.84	7.34	4.88	8.12	5.23	8.41	5.08
	22			5.36	4.16	6.42	4.71	6.94	4.84	7.30	4.87	8.02	5.19	8.29	5.04
	24			5.35	4.16	6.41	4.70	6.94	4.84	7.27	4.86	7.92	5.15	8.18	5.00
	26			5.35	4.16	6.38	4.69	6.88	4.81	7.18	4.82	7.79	5.10	8.05	4.95
	28	4.85	4.10	5.34	4.15	6.35	4.68	6.81	4.78	7.10	4.79	7.67	5.05	7.93	4.91
	30	4.85	4.10	5.33	4.15	6.30	4.66	6.75	4.74	7.02	4.75	7.55	5.00	7.81	4.87
	32	4.85	4.10	5.32	4.14	6.26	4.64	6.68	4.71	6.93	4.70	7.44	4.96	7.69	4.82
	34	4.85	4.10	5.30	4.14	6.23	4.63	6.59	4.67	6.82	4.66	7.28	4.90	7.53	4.77
	35	4.85	4.10	5.29	4.13	6.22	4.62	6.55	4.66	6.77	4.64	7.20	4.87	7.45	4.74
	36	4.85	4.10	5.29	4.13	6.18	4.61	6.52	4.64	6.70	4.61	7.07	4.82	7.31	4.69
	38	4.85	4.10	5.27	4.12	6.08	4.57	6.45	4.62	6.57	4.56	6.81	4.72	7.02	4.58
	39	4.85	4.10	5.27	4.12	6.03	4.54	6.42	4.60	6.51	4.53	6.68	4.67	6.87	4.53
	41	4.85	4.10	5.25	4.11	5.85	4.47	6.16	4.50	6.23	4.43	6.39	4.57	6.55	4.42
	43	4.85	4.10	5.23	4.11	5.67	4.39	5.90	4.39	5.96	4.32	6.09	4.45	6.23	4.30

Air flow (m³/min)	outdoor temp DB	WB	indoor temp 16℃CDB	18℃CDB	20℃CDB	22℃CDB	24℃CDB
Me 15 (m³/min)	-19.8	-20	4.22	4.22	4.22	4.22	4.22
	-17.8	-18	4.49	4.49	4.49	4.49	4.49
	-15.7	-16	4.76	4.76	4.76	4.76	4.76
	-13.7	-14	5.03	5.03	5.03	5.03	5.03
	-11.7	-12	5.30	5.30	5.30	5.30	5.30
	-9.6	-10	5.57	5.57	5.57	5.57	5.57
	-7.5	-8	5.91	5.91	5.91	5.91	5.91
	-5.5	-6	6.25	6.25	6.25	6.25	6.25
	-3.4	-4	6.47	6.46	6.45	6.39	6.32
	-1.3	-2	6.69	6.67	6.65	6.52	6.40
	0.8	0	7.05	6.95	6.85	6.61	6.36
	3.9	3	7.65	7.38	7.11	6.71	6.31
	7.0	6	8.36	7.82	7.27	6.76	6.25
	10.1	9	8.31	7.77	7.24	6.72	6.20
	13.2	12	8.25	7.72	7.20	6.67	6.14
	16.9	15.5	8.19	7.66	7.13	6.61	6.08

Air flow	Outdoor air temp.	Indoor air temperature 21℃CDB 14℃CWB TC	SHC	23℃CDB 16℃CWB TC	SHC	26℃CDB 18℃CWB TC	SHC	27℃CDB 19℃CWB TC	SHC	28℃CDB 20℃CWB TC	SHC	31℃CDB 22℃CWB TC	SHC	33℃CDB 24℃CWB TC	SHC
Lo 10 (m³/min)	10			4.81	3.39	5.75	3.86	6.22	3.99	6.62	4.07	7.42	4.38	7.70	4.24
	12			4.81	3.39	5.75	3.86	6.22	3.99	6.61	4.06	7.39	4.37	7.67	4.23
	14			4.81	3.39	5.75	3.86	6.22	3.99	6.60	4.06	7.36	4.35	7.63	4.21
	16			4.81	3.39	5.75	3.86	6.22	3.99	6.59	4.05	7.33	4.34	7.60	4.20
	18			4.81	3.39	5.75	3.86	6.22	3.99	6.58	4.05	7.31	4.33	7.57	4.19
	20			4.81	3.39	5.75	3.86	6.22	3.99	6.58	4.05	7.28	4.31	7.53	4.17
	22			4.80	3.38	5.75	3.86	6.22	3.99	6.54	4.03	7.19	4.27	7.43	4.13
	24			4.80	3.38	5.75	3.86	6.22	3.99	6.51	4.02	7.10	4.23	7.33	4.09
	26			4.79	3.38	5.72	3.85	6.16	3.95	6.44	3.98	6.99	4.19	7.22	4.04
	28	4.34	3.31	4.79	3.38	5.69	3.83	6.10	3.92	6.36	3.94	6.87	4.13	7.10	3.99
	30	4.34	3.31	4.78	3.37	5.65	3.81	6.05	3.90	6.29	3.90	6.77	4.08	7.00	3.95
	32	4.34	3.31	4.77	3.37	5.61	3.79	5.99	3.87	6.21	3.87	6.66	4.04	6.89	3.91
	34	4.34	3.31	4.75	3.36	5.59	3.78	5.91	3.83	6.11	3.82	6.52	3.97	6.75	3.85
	35	4.34	3.31	4.74	3.36	5.58	3.78	5.87	3.82	6.06	3.80	6.45	3.95	6.68	3.82
	36	4.34	3.31	4.74	3.36	5.53	3.75	5.84	3.80	6.01	3.78	6.34	3.90	6.55	3.77
	38	4.34	3.31	4.73	3.35	5.45	3.72	5.78	3.77	5.89	3.72	6.10	3.79	6.29	3.67
	39	4.34	3.31	4.72	3.35	5.41	3.69	5.75	3.76	5.83	3.69	5.99	3.75	6.16	3.62
	41	4.34	3.31	4.70	3.34	5.25	3.62	5.52	3.65	5.59	3.58	5.72	3.64	5.87	3.51
	43	4.34	3.31	4.69	3.33	5.08	3.54	5.28	3.54	5.34	3.47	5.46	3.53	5.58	3.39

Air flow (m³/min)	outdoor temp DB	WB	indoor temp 16℃CDB	18℃CDB	20℃CDB	22℃CDB	24℃CDB
Lo 10 (m³/min)	-19.8	-20	3.77	3.77	3.77	3.77	3.77
	-17.8	-18	4.01	4.01	4.01	4.01	4.01
	-15.7	-16	4.26	4.26	4.26	4.26	4.26
	-13.7	-14	4.50	4.50	4.50	4.50	4.50
	-11.7	-12	4.74	4.74	4.74	4.74	4.74
	-9.6	-10	4.98	4.98	4.98	4.98	4.98
	-7.5	-8	5.29	5.29	5.29	5.29	5.29
	-5.5	-6	5.59	5.59	5.59	5.59	5.59
	-3.4	-4	5.79	5.78	5.77	5.71	5.66
	-1.3	-2	5.98	5.96	5.95	5.83	5.72
	0.8	0	6.31	6.22	6.13	5.91	5.69
	3.9	3	6.84	6.60	6.35	6.00	5.64
	7.0	6	7.48	6.99	6.50	6.05	5.59
	10.1	9	7.43	6.95	6.48	6.01	5.54
	13.2	12	7.38	6.91	6.44	5.96	5.49
	16.9	15.5	7.32	6.85	6.38	5.91	5.44

Note(1) This data shows average statuses out of those possible to occur in the system control.
(Depending on controls, there may be ranges where the operation is not conducted continuously.)
(2) Symbols are as follows
TC :Total cooling capacity(kW)
SHC :Sensible heat capacity(kW)

PJG000Z022

Model **FDUM90KXE6F** Cool Mode

Air flow	Outdoor air temp.	Indoor air temperature 21℃CDB 14℃CWB TC	SHC	23℃CDB 16℃CWB TC	SHC	26℃CDB 18℃CWB TC	SHC	27℃CDB 19℃CWB TC	SHC	28℃CDB 20℃CWB TC	SHC	31℃CDB 22℃CWB TC	SHC	33℃CDB 24℃CWB TC	SHC
P-Hi 24 (m³/min)	10			7.38	6.01	8.82	6.77	9.54	6.94	10.15	7.03	11.37	7.59	11.80	7.40
	12			7.38	6.01	8.82	6.77	9.54	6.94	10.14	7.03	11.33	7.58	11.75	7.39
	14			7.38	6.01	8.82	6.77	9.54	6.94	10.12	7.02	11.29	7.56	11.70	7.36
	16			7.38	6.01	8.82	6.77	9.54	6.94	10.11	7.02	11.25	7.55	11.65	7.34
	18			7.38	6.01	8.82	6.77	9.54	6.94	10.09	7.01	11.20	7.53	11.60	7.33
	20			7.38	6.01	8.82	6.77	9.54	6.94	10.08	7.01	11.16	7.52	11.55	7.31
	22			7.37	6.00	8.82	6.77	9.54	6.94	10.03	6.99	11.02	7.45	11.39	7.24
	24			7.36	6.00	8.81	6.76	9.54	6.94	9.99	6.97	10.88	7.41	11.24	7.20
	26			7.35	5.99	8.77	6.75	9.45	6.91	9.87	6.91	10.71	7.33	11.06	7.14
	28	6.66	5.92	7.34	5.99	8.73	6.73	9.36	6.86	9.75	6.87	10.54	7.28	10.89	7.08
	30	6.66	5.92	7.33	5.97	8.66	6.70	9.27	6.80	9.64	6.83	10.38	7.21	10.73	7.03
	32	6.66	5.92	7.31	5.97	8.60	6.68	9.18	6.77	9.53	6.75	10.22	7.15	10.56	6.93
	34	6.66	5.92	7.28	5.95	8.57	6.67	9.06	6.72	9.37	6.69	10.00	7.04	10.35	6.87
	35	6.66	5.92	7.27	5.95	8.55	6.66	9.00	6.70	9.30	6.67	9.89	7.01	10.24	6.83
	36	6.66	5.92	7.26	5.94	8.49	6.64	8.96	6.68	9.21	6.63	9.72	6.95	10.04	6.77
	38	6.66	5.92	7.25	5.94	8.36	6.59	8.87	6.65	9.03	6.57	9.36	6.83	9.64	6.65
	39	6.66	5.92	7.24	5.94	8.29	6.56	8.82	6.63	8.94	6.54	9.18	6.77	9.44	6.59
	41	6.66	5.92	7.21	5.92	8.04	6.45	8.46	6.49	8.56	6.40	8.77	6.62	9.00	6.44
	43	6.66	5.92	7.19	5.92	7.80	6.36	8.10	6.34	8.19	6.25	8.37	6.49	8.56	6.30

Heat Mode

Air flow (m³/min)	outdoor temp DB	WB	indoor temp 16℃CDB	18℃CDB	20℃CDB	22℃CDB	24℃CDB
P-Hi 24 (m³/min)	-19.8	-20	5.80	5.80	5.80	5.80	5.80
	-17.8	-18	6.17	6.17	6.17	6.17	6.17
	-15.7	-16	6.55	6.55	6.55	6.55	6.55
	-13.7	-14	6.92	6.92	6.92	6.92	6.92
	-11.7	-12	7.29	7.29	7.29	7.29	7.29
	-9.6	-10	7.67	7.67	7.67	7.67	7.67
	-7.5	-8	8.13	8.13	8.13	8.13	8.13
	-5.5	-6	8.60	8.60	8.60	8.60	8.60
	-3.4	-4	8.90	8.89	8.88	8.79	8.70
	-1.3	-2	9.20	9.18	9.15	8.98	8.80
	0.8	0	9.70	9.56	9.43	9.09	8.75
	3.9	3	10.53	10.15	9.78	9.23	8.68
	7.0	6	11.50	10.75	10.00	9.30	8.60
	10.1	9	11.43	10.69	9.96	9.24	8.53
	13.2	12	11.35	10.63	9.90	9.18	8.45
	16.9	15.5	11.26	10.54	9.81	9.09	8.36

Air flow	Outdoor air temp.	Indoor air temperature 21℃CDB 14℃CWB TC	SHC	23℃CDB 16℃CWB TC	SHC	26℃CDB 18℃CWB TC	SHC	27℃CDB 19℃CWB TC	SHC	28℃CDB 20℃CWB TC	SHC	31℃CDB 22℃CWB TC	SHC	33℃CDB 24℃CWB TC	SHC
Hi 19 (m³/min)	10			7.25	5.45	8.67	6.17	9.38	6.35	9.98	6.44	11.18	6.94	11.61	6.75
	12			7.25	5.45	8.67	6.17	9.38	6.35	9.97	6.44	11.14	6.93	11.56	6.73
	14			7.25	5.45	8.67	6.17	9.38	6.35	9.95	6.43	11.10	6.91	11.51	6.71
	16			7.25	5.45	8.67	6.17	9.38	6.35	9.94	6.43	11.06	6.90	11.46	6.69
	18			7.25	5.45	8.67	6.17	9.38	6.35	9.93	6.42	11.02	6.87	11.41	6.68
	20			7.25	5.45	8.67	6.17	9.38	6.35	9.91	6.41	10.98	6.86	11.36	6.65
	22			7.24	5.44	8.67	6.17	9.38	6.35	9.87	6.40	10.84	6.81	11.20	6.59
	24			7.23	5.44	8.67	6.17	9.38	6.35	9.82	6.37	10.70	6.74	11.05	6.53
	26			7.23	5.44	8.62	6.15	9.29	6.30	9.71	6.32	10.53	6.67	10.88	6.47
	28	6.55	5.34	7.22	5.43	8.58	6.13	9.20	6.24	9.59	6.27	10.36	6.61	10.71	6.41
	30	6.55	5.34	7.20	5.42	8.52	6.10	9.12	6.21	9.48	6.21	10.20	6.54	10.55	6.35
	32	6.55	5.34	7.19	5.42	8.45	6.07	9.03	6.17	9.37	6.16	10.05	6.47	10.39	6.29
	34	6.55	5.34	7.16	5.40	8.42	6.06	8.91	6.12	9.22	6.10	9.83	6.39	10.17	6.21
	35	6.55	5.34	7.15	5.39	8.41	6.06	8.85	6.10	9.14	6.07	9.73	6.35	10.07	6.17
	36	6.55	5.34	7.14	5.39	8.34	6.02	8.81	6.08	9.05	6.04	9.55	6.28	9.87	6.08
	38	6.55	5.34	7.12	5.38	8.22	5.97	8.72	6.05	8.88	5.97	9.20	6.13	9.48	5.95
	39	6.55	5.34	7.12	5.38	8.15	5.94	8.67	6.02	8.79	5.93	9.03	6.07	9.28	5.89
	41	6.55	5.34	7.09	5.37	7.91	5.83	8.32	5.87	8.42	5.77	8.63	5.93	8.85	5.74
	43	6.55	5.34	7.07	5.36	7.67	5.72	7.97	5.72	8.05	5.62	8.23	5.78	8.41	5.59

Air flow (m³/min)	outdoor temp DB	WB	indoor temp 16℃CDB	18℃CDB	20℃CDB	22℃CDB	24℃CDB
Hi 19 (m³/min)	-19.8	-20	5.66	5.66	5.66	5.66	5.66
	-17.8	-18	6.02	6.02	6.02	6.02	6.02
	-15.7	-16	6.38	6.38	6.38	6.38	6.38
	-13.7	-14	6.75	6.75	6.75	6.75	6.75
	-11.7	-12	7.11	7.11	7.11	7.11	7.11
	-9.6	-10	7.48	7.48	7.48	7.48	7.48
	-7.5	-8	7.93	7.93	7.93	7.93	7.93
	-5.5	-6	8.39	8.39	8.39	8.39	8.39
	-3.4	-4	8.68	8.67	8.65	8.57	8.48
	-1.3	-2	8.97	8.95	8.92	8.75	8.58
	0.8	0	9.46	9.32	9.19	8.86	8.53
	3.9	3	10.26	9.90	9.53	8.99	8.46
	7.0	6	11.21	10.48	9.75	9.07	8.39
	10.1	9	11.14	10.43	9.71	9.01	8.31
	13.2	12	11.07	10.36	9.65	8.95	8.24
	16.9	15.5	10.98	10.27	9.57	8.86	8.15

Air flow	Outdoor air temp.	Indoor air temperature 21℃CDB 14℃CWB TC	SHC	23℃CDB 16℃CWB TC	SHC	26℃CDB 18℃CWB TC	SHC	27℃CDB 19℃CWB TC	SHC	28℃CDB 20℃CWB TC	SHC	31℃CDB 22℃CWB TC	SHC	33℃CDB 24℃CWB TC	SHC
Me 15 (m³/min)	10			6.89	4.90	8.23	5.57	8.90	5.74	9.47	5.85	10.61	6.30	11.02	6.12
	12			6.89	4.90	8.23	5.57	8.90	5.74	9.46	5.84	10.57	6.29	10.97	6.09
	14			6.89	4.90	8.23	5.57	8.90	5.74	9.45	5.84	10.53	6.27	10.92	6.07
	16			6.89	4.90	8.23	5.57	8.90	5.74	9.43	5.83	10.50	6.26	10.88	6.06
	18			6.89	4.90	8.23	5.57	8.90	5.74	9.42	5.83	10.46	6.23	10.83	6.04
	20			6.89	4.90	8.23	5.57	8.90	5.74	9.41	5.82	10.42	6.22	10.78	6.01
	22			6.88	4.89	8.23	5.57	8.90	5.74	9.37	5.80	10.29	6.16	10.63	5.95
	24			6.87	4.89	8.22	5.56	8.90	5.74	9.32	5.78	10.16	6.10	10.49	5.89
	26			6.86	4.88	8.19	5.55	8.82	5.70	9.21	5.72	10.00	6.03	10.33	5.83
	28	6.22	4.79	6.85	4.88	8.15	5.53	8.74	5.66	9.10	5.67	9.84	5.96	10.16	5.76
	30	6.22	4.79	6.84	4.87	8.09	5.50	8.65	5.62	9.00	5.63	9.69	5.89	10.01	5.70
	32	6.22	4.79	6.82	4.86	8.02	5.46	8.57	5.58	8.89	5.58	9.54	5.83	9.86	5.64
	34	6.22	4.79	6.80	4.85	7.99	5.45	8.46	5.53	8.75	5.51	9.33	5.74	9.66	5.56
	35	6.22	4.79	6.79	4.84	7.98	5.44	8.40	5.50	8.68	5.48	9.23	5.69	9.55	5.52
	36	6.22	4.79	6.78	4.84	7.92	5.42	8.36	5.48	8.59	5.44	9.07	5.63	9.37	5.43
	38	6.22	4.79	6.76	4.83	7.80	5.35	8.27	5.44	8.43	5.37	8.74	5.48	9.00	5.30
	39	6.22	4.79	6.75	4.82	7.74	5.33	8.23	5.42	8.34	5.32	8.57	5.41	8.81	5.23
	41	6.22	4.79	6.73	4.81	7.51	5.22	7.90	5.27	7.99	5.17	8.19	5.26	8.40	5.08
	43	6.22	4.79	6.71	4.81	7.28	5.11	7.56	5.11	7.64	5.01	7.81	5.11	7.99	4.93

Air flow (m³/min)	outdoor temp DB	WB	indoor temp 16℃CDB	18℃CDB	20℃CDB	22℃CDB	24℃CDB
Me 15 (m³/min)	-19.8	-20	5.34	5.34	5.34	5.34	5.34
	-17.8	-18	5.68	5.68	5.68	5.68	5.68
	-15.7	-16	6.02	6.02	6.02	6.02	6.02
	-13.7	-14	6.37	6.37	6.37	6.37	6.37
	-11.7	-12	6.71	6.71	6.71	6.71	6.71
	-9.6	-10	7.05	7.05	7.05	7.05	7.05
	-7.5	-8	7.48	7.48	7.48	7.48	7.48
	-5.5	-6	7.91	7.91	7.91	7.91	7.91
	-3.4	-4	8.19	8.18	8.17	8.08	8.00
	-1.3	-2	8.46	8.44	8.42	8.26	8.10
	0.8	0	8.92	8.80	8.67	8.36	8.05
	3.9	3	9.68	9.34	8.99	8.49	7.98
	7.0	6	10.58	9.89	9.20	8.56	7.91
	10.1	9	10.51	9.84	9.17	8.50	7.84
	13.2	12	10.44	9.78	9.11	8.44	7.77
	16.9	15.5	10.36	9.69	9.03	8.36	7.69

Air flow	Outdoor air temp.	Indoor air temperature 21℃CDB 14℃CWB TC	SHC	23℃CDB 16℃CWB TC	SHC	26℃CDB 18℃CWB TC	SHC	27℃CDB 19℃CWB TC	SHC	28℃CDB 20℃CWB TC	SHC	31℃CDB 22℃CWB TC	SHC	33℃CDB 24℃CWB TC	SHC
Lo 10 (m³/min)	10			5.99	4.02	7.16	4.61	7.75	4.79	8.24	4.91	9.23	5.31	9.59	5.13
	12			5.99	4.02	7.16	4.61	7.75	4.79	8.23	4.91	9.20	5.29	9.55	5.11
	14			5.99	4.02	7.16	4.61	7.75	4.79	8.22	4.90	9.17	5.27	9.51	5.09
	16			5.99	4.02	7.16	4.61	7.75	4.79	8.21	4.90	9.13	5.25	9.46	5.06
	18			5.99	4.02	7.16	4.61	7.75	4.79	8.20	4.89	9.10	5.23	9.42	5.04
	20			5.99	4.02	7.16	4.61	7.75	4.79	8.19	4.89	9.07	5.22	9.38	5.02
	22			5.98	4.01	7.16	4.61	7.75	4.79	8.15	4.86	8.95	5.15	9.25	4.96
	24			5.98	4.01	7.16	4.61	7.75	4.79	8.11	4.84	8.84	5.09	9.13	4.90
	26			5.97	4.01	7.12	4.59	7.68	4.75	8.02	4.79	8.70	5.02	8.99	4.83
	28	5.41	3.91	5.96	4.00	7.09	4.57	7.60	4.71	7.92	4.73	8.56	4.95	8.85	4.77
	30	5.41	3.91	5.95	4.00	7.04	4.54	7.53	4.67	7.83	4.68	8.43	4.88	8.71	4.70
	32	5.41	3.91	5.94	3.99	6.98	4.51	7.46	4.63	7.74	4.64	8.30	4.81	8.58	4.64
	34	5.41	3.91	5.92	3.98	6.96	4.50	7.36	4.58	7.61	4.57	8.12	4.72	8.40	4.56
	35	5.41	3.91	5.91	3.97	6.94	4.49	7.31	4.55	7.55	4.54	8.04	4.68	8.31	4.51
	36	5.41	3.91	5.90	3.97	6.89	4.46	7.27	4.53	7.48	4.50	7.89	4.61	8.15	4.44
	38	5.41	3.91	5.88	3.96	6.79	4.41	7.20	4.49	7.33	4.42	7.60	4.47	7.83	4.30
	39	5.41	3.91	5.88	3.96	6.73	4.37	7.16	4.47	7.26	4.39	7.46	4.40	7.67	4.23
	41	5.41	3.91	5.86	3.95	6.53	4.26	6.87	4.32	6.96	4.23	7.13	4.25	7.31	4.08
	43	5.41	3.91	5.84	3.93	6.33	4.16	6.58	4.17	6.65	4.08	6.80	4.10	6.95	3.93

Air flow (m³/min)	outdoor temp DB	WB	indoor temp 16℃CDB	18℃CDB	20℃CDB	22℃CDB	24℃CDB
Lo 10 (m³/min)	-19.8	-20	4.59	4.59	4.59	4.59	4.59
	-17.8	-18	4.89	4.89	4.89	4.89	4.89
	-15.7	-16	5.18	5.18	5.18	5.18	5.18
	-13.7	-14	5.48	5.48	5.48	5.48	5.48
	-11.7	-12	5.78	5.78	5.78	5.78	5.78
	-9.6	-10	6.07	6.07	6.07	6.07	6.07
	-7.5	-8	6.44	6.44	6.44	6.44	6.44
	-5.5	-6	6.81	6.81	6.81	6.81	6.81
	-3.4	-4	7.05	7.04	7.03	6.96	6.89
	-1.3	-2	7.29	7.27	7.25	7.11	6.97
	0.8	0	7.68	7.57	7.46	7.20	6.93
	3.9	3	8.34	8.04	7.74	7.31	6.87
	7.0	6	9.11	8.51	7.92	7.37	6.81
	10.1	9	9.05	8.47	7.89	7.32	6.75
	13.2	12	8.99	8.42	7.84	7.27	6.69
	16.9	15.5	8.92	8.35	7.77	7.20	6.62

Note(1) This data shows average statuses out of those possible to occur in the system control.
(Depending on controls, there may be ranges where the operation is not conducted continuously.)
(2) Symbols are as follows
TC :Total cooling capacity(kW)
SHC :Sensible heat capacity(kW)

PJG000Z022

Model **FDUM112KXE6F** Cool Mode

Air flow	Outdoor air temp.	Indoor air temperature 21℃CDB 14℃CWB TC	SHC	23℃CDB 16℃CWB TC	SHC	26℃CDB 18℃CWB TC	SHC	27℃CDB 19℃CWB TC	SHC	28℃CDB 20℃CWB TC	SHC	31℃CDB 22℃CWB TC	SHC	33℃CDB 24℃CWB TC	SHC
P-Hi 36 (m³/min)	10			9.18	7.72	10.97	8.72	11.87	8.91	12.63	9.01	14.15	9.75	14.69	9.51
	12			9.18	7.72	10.97	8.72	11.87	8.91	12.61	9.00	14.10	9.71	14.63	9.43
	14			9.18	7.72	10.97	8.72	11.87	8.91	12.60	9.00	14.05	9.70	14.56	9.41
	16			9.18	7.72	10.97	8.72	11.87	8.91	12.58	8.99	14.00	9.69	14.50	9.40
	18			9.18	7.72	10.97	8.72	11.87	8.91	12.56	8.98	13.94	9.67	14.44	9.38
	20			9.18	7.72	10.97	8.72	11.87	8.91	12.55	8.98	13.89	9.65	14.37	9.36
	22			9.17	7.72	10.97	8.72	11.87	8.91	12.49	8.96	13.72	9.54	14.18	9.31
	24			9.15	7.71	10.97	8.72	11.87	8.91	12.43	8.94	13.54	9.48	13.98	9.25
	26			9.15	7.71	10.92	8.70	11.76	8.87	12.28	8.87	13.33	9.42	13.77	9.19
	28	8.29	7.59	9.14	7.71	10.86	8.66	11.65	8.81	12.14	8.82	13.11	9.35	13.55	9.11
	30	8.29	7.59	9.12	7.68	10.78	8.63	11.54	8.77	12.00	8.76	12.91	9.27	13.35	9.04
	32	8.29	7.59	9.09	7.67	10.70	8.60	11.42	8.71	11.85	8.71	12.71	9.21	13.15	8.98
	34	8.29	7.59	9.06	7.66	10.66	8.59	11.27	8.66	11.66	8.62	12.45	9.11	12.87	8.88
	35	8.29	7.59	9.05	7.65	10.64	8.58	11.20	8.63	11.57	8.59	12.31	9.05	12.74	8.85
	36	8.29	7.59	9.04	7.65	10.56	8.55	11.14	8.61	11.46	8.56	12.09	8.98	12.49	8.76
	38	8.29	7.59	9.02	7.64	10.40	8.48	11.03	8.56	11.24	8.47	11.65	8.83	12.00	8.60
	39	8.29	7.59	9.00	7.60	10.32	8.45	10.98	8.54	11.13	8.43	11.43	8.75	11.75	8.52
	41	8.29	7.59	8.97	7.59	10.01	8.32	10.53	8.37	10.66	8.24	10.92	8.58	11.20	8.28
	43	8.29	7.59	8.94	7.58	9.70	8.19	10.08	8.17	10.19	8.06	10.41	8.34	10.65	8.13

Heat Mode

Air flow (m³/min)	outdoor temp DB	WB	indoor temp 16℃CDB	18℃CDB	20℃CDB	22℃CDB	24℃CDB
P-Hi 36 (m³/min)	-19.8	-20	7.25	7.25	7.25	7.25	7.25
	-17.8	-18	7.72	7.72	7.72	7.72	7.72
	-15.7	-16	8.18	8.18	8.18	8.18	8.18
	-13.7	-14	8.65	8.65	8.65	8.65	8.65
	-11.7	-12	9.12	9.12	9.12	9.12	9.12
	-9.6	-10	9.58	9.58	9.58	9.58	9.58
	-7.5	-8	10.17	10.17	10.17	10.17	10.17
	-5.5	-6	10.75	10.75	10.75	10.75	10.75
	-3.4	-4	11.13	11.11	11.09	10.98	10.88
	-1.3	-2	11.50	11.47	11.44	11.22	11.00
	0.8	0	12.13	11.95	11.78	11.36	10.94
	3.9	3	13.16	12.69	12.22	11.53	10.84
	7.0	6	14.38	13.44	12.50	11.63	10.75
	10.1	9	14.28	13.37	12.45	11.55	10.66
	13.2	12	14.19	13.28	12.38	11.47	10.56
	16.9	15.5	14.08	13.17	12.27	11.36	10.45

Air flow	Outdoor air temp.	Indoor air temperature 21℃CDB 14℃CWB TC	SHC	23℃CDB 16℃CWB TC	SHC	26℃CDB 18℃CWB TC	SHC	27℃CDB 19℃CWB TC	SHC	28℃CDB 20℃CWB TC	SHC	31℃CDB 22℃CWB TC	SHC	33℃CDB 24℃CWB TC	SHC
Hi 28 (m³/min)	10			8.94	6.86	10.69	7.79	11.56	7.99	12.30	8.12	13.78	8.76	14.31	8.50
	12			8.94	6.86	10.69	7.79	11.56	7.99	12.29	8.11	13.73	8.74	14.25	8.48
	14			8.94	6.86	10.69	7.79	11.56	7.99	12.27	8.11	13.68	8.68	14.19	8.46
	16			8.94	6.86	10.69	7.79	11.56	7.99	12.25	8.10	13.63	8.67	14.13	8.44
	18			8.94	6.86	10.69	7.79	11.56	7.99	12.24	8.10	13.58	8.65	14.06	8.42
	20			8.94	6.86	10.69	7.79	11.56	7.99	12.22	8.08	13.53	8.63	14.00	8.41
	22			8.93	6.85	10.69	7.79	11.56	7.99	12.16	8.05	13.36	8.58	13.81	8.33
	24			8.92	6.85	10.68	7.79	11.56	7.99	12.11	8.04	13.19	8.51	13.62	8.26
	26			8.91	6.84	10.63	7.77	11.46	7.95	11.96	7.97	12.98	8.43	13.41	8.19
	28	8.07	6.77	8.90	6.84	10.58	7.75	11.35	7.90	11.82	7.91	12.77	8.34	13.20	8.11
	30	8.07	6.77	8.88	6.83	10.50	7.71	11.24	7.83	11.68	7.86	12.58	8.27	13.00	8.04
	32	8.07	6.77	8.86	6.82	10.42	7.68	11.13	7.79	11.55	7.77	12.39	8.19	12.81	7.97
	34	8.07	6.77	8.83	6.81	10.38	7.66	10.98	7.73	11.36	7.70	12.12	8.09	12.54	7.83
	35	8.07	6.77	8.82	6.81	10.36	7.65	10.91	7.71	11.27	7.67	11.99	8.04	12.41	7.79
	36	8.07	6.77	8.80	6.80	10.29	7.61	10.86	7.69	11.16	7.63	11.78	7.92	12.17	7.72
	38	8.07	6.77	8.78	6.79	10.13	7.55	10.75	7.64	10.95	7.55	11.35	7.79	11.69	7.57
	39	8.07	6.77	8.77	6.79	10.05	7.51	10.69	7.61	10.84	7.49	11.13	7.70	11.45	7.48
	41	8.07	6.77	8.74	6.77	9.75	7.38	10.26	7.43	10.38	7.31	10.64	7.52	10.91	7.30
	43	8.07	6.77	8.71	6.76	9.45	7.24	9.82	7.24	9.93	7.14	10.14	7.33	10.37	7.12

Air flow (m³/min)	outdoor temp DB	WB	indoor temp 16℃CDB	18℃CDB	20℃CDB	22℃CDB	24℃CDB
Hi 28 (m³/min)	-19.8	-20	7.05	7.05	7.05	7.05	7.05
	-17.8	-18	7.51	7.51	7.51	7.51	7.51
	-15.7	-16	7.96	7.96	7.96	7.96	7.96
	-13.7	-14	8.41	8.41	8.41	8.41	8.41
	-11.7	-12	8.87	8.87	8.87	8.87	8.87
	-9.6	-10	9.32	9.32	9.32	9.32	9.32
	-7.5	-8	9.89	9.89	9.89	9.89	9.89
	-5.5	-6	10.46	10.46	10.46	10.46	10.46
	-3.4	-4	10.82	10.81	10.79	10.69	10.58
	-1.3	-2	11.19	11.16	11.13	10.91	10.70
	0.8	0	11.80	11.63	11.46	11.05	10.64
	3.9	3	12.80	12.34	11.89	11.22	10.55
	7.0	6	13.98	13.07	12.16	11.31	10.46
	10.1	9	13.89	13.00	12.11	11.24	10.37
	13.2	12	13.80	12.92	12.04	11.16	10.28
	16.9	15.5	13.70	12.81	11.93	11.05	10.17

Air flow	Outdoor air temp.	Indoor air temperature 21℃CDB 14℃CWB TC	SHC	23℃CDB 16℃CWB TC	SHC	26℃CDB 18℃CWB TC	SHC	27℃CDB 19℃CWB TC	SHC	28℃CDB 20℃CWB TC	SHC	31℃CDB 22℃CWB TC	SHC	33℃CDB 24℃CWB TC	SHC
Me 25 (m³/min)	10			8.43	6.41	10.07	7.26	10.90	7.46	11.59	7.55	12.99	8.16	13.48	7.94
	12			8.43	6.41	10.07	7.26	10.90	7.46	11.58	7.55	12.94	8.15	13.43	7.92
	14			8.43	6.41	10.07	7.26	10.90	7.46	11.56	7.54	12.89	8.13	13.37	7.89
	16			8.43	6.41	10.07	7.26	10.90	7.46	11.55	7.54	12.85	8.10	13.31	7.87
	18			8.43	6.41	10.07	7.26	10.90	7.46	11.53	7.53	12.80	8.09	13.25	7.86
	20			8.43	6.41	10.07	7.26	10.90	7.46	11.52	7.53	12.75	8.07	13.19	7.82
	22			8.41	6.40	10.07	7.26	10.90	7.46	11.46	7.51	12.59	8.00	13.01	7.76
	24			8.40	6.39	10.07	7.26	10.90	7.46	11.41	7.49	12.43	7.94	12.83	7.69
	26			8.40	6.39	10.02	7.23	10.79	7.40	11.27	7.44	12.23	7.86	12.64	7.62
	28	7.61	6.29	8.39	6.39	9.97	7.21	10.69	7.36	11.14	7.38	12.04	7.78	12.44	7.54
	30	7.61	6.29	8.37	6.38	9.89	7.18	10.59	7.31	11.01	7.32	11.85	7.70	12.25	7.45
	32	7.61	6.29	8.35	6.37	9.82	7.14	10.49	7.28	10.88	7.26	11.67	7.63	12.07	7.39
	34	7.61	6.29	8.32	6.36	9.78	7.13	10.35	7.21	10.71	7.20	11.42	7.51	11.82	7.32
	35	7.61	6.29	8.31	6.35	9.77	7.12	10.28	7.19	10.62	7.15	11.30	7.47	11.69	7.28
	36	7.61	6.29	8.30	6.35	9.69	7.09	10.23	7.16	10.52	7.12	11.10	7.41	11.47	7.20
	38	7.61	6.29	8.28	6.34	9.55	7.03	10.13	7.12	10.31	7.02	10.69	7.25	11.01	7.04
	39	7.61	6.29	8.27	6.34	9.47	7.00	10.07	7.10	10.21	6.98	10.49	7.17	10.78	6.96
	41	7.61	6.29	8.24	6.32	9.19	6.85	9.66	6.92	9.78	6.78	10.02	6.99	10.28	6.78
	43	7.61	6.29	8.21	6.31	8.90	6.74	9.25	6.73	9.35	6.63	9.56	6.82	9.77	6.58

Air flow (m³/min)	outdoor temp DB	WB	indoor temp 16℃CDB	18℃CDB	20℃CDB	22℃CDB	24℃CDB
Me 25 (m³/min)	-19.8	-20	6.59	6.59	6.59	6.59	6.59
	-17.8	-18	7.01	7.01	7.01	7.01	7.01
	-15.7	-16	7.44	7.44	7.44	7.44	7.44
	-13.7	-14	7.86	7.86	7.86	7.86	7.86
	-11.7	-12	8.29	8.29	8.29	8.29	8.29
	-9.6	-10	8.71	8.71	8.71	8.71	8.71
	-7.5	-8	9.24	9.24	9.24	9.24	9.24
	-5.5	-6	9.77	9.77	9.77	9.77	9.77
	-3.4	-4	10.11	10.10	10.08	9.98	9.88
	-1.3	-2	10.45	10.42	10.39	10.20	10.00
	0.8	0	11.02	10.86	10.71	10.32	9.94
	3.9	3	11.96	11.53	11.10	10.48	9.85
	7.0	6	13.06	12.21	11.36	10.56	9.77
	10.1	9	12.98	12.15	11.32	10.50	9.68
	13.2	12	12.89	12.07	11.25	10.42	9.60
	16.9	15.5	12.79	11.97	11.15	10.32	9.50

Air flow	Outdoor air temp.	Indoor air temperature 21℃CDB 14℃CWB TC	SHC	23℃CDB 16℃CWB TC	SHC	26℃CDB 18℃CWB TC	SHC	27℃CDB 19℃CWB TC	SHC	28℃CDB 20℃CWB TC	SHC	31℃CDB 22℃CWB TC	SHC	33℃CDB 24℃CWB TC	SHC
Lo 19 (m³/min)	10			7.53	5.45	9.01	6.20	9.74	6.37	10.36	6.50	11.61	7.00	12.05	6.80
	12			7.53	5.45	9.01	6.20	9.74	6.37	10.35	6.49	11.57	6.98	12.00	6.77
	14			7.53	5.45	9.01	6.20	9.74	6.37	10.34	6.49	11.53	6.97	11.95	6.75
	16			7.53	5.45	9.01	6.20	9.74	6.37	10.32	6.47	11.48	6.94	11.90	6.73
	18			7.53	5.45	9.01	6.20	9.74	6.37	10.31	6.47	11.44	6.93	11.85	6.71
	20			7.53	5.45	9.01	6.20	9.74	6.37	10.29	6.46	11.40	6.91	11.79	6.68
	22			7.52	5.44	9.00	6.19	9.74	6.37	10.25	6.45	11.26	6.85	11.63	6.60
	24			7.51	5.44	9.00	6.19	9.74	6.37	10.20	6.42	11.11	6.78	11.47	6.55
	26			7.51	5.44	8.96	6.17	9.65	6.33	10.08	6.36	10.94	6.69	11.30	6.49
	28	6.80	5.34	7.50	5.44	8.91	6.15	9.56	6.30	9.96	6.30	10.76	6.63	11.12	6.42
	30	6.80	5.34	7.48	5.43	8.85	6.12	9.47	6.25	9.84	6.25	10.60	6.56	10.95	6.35
	32	6.80	5.34	7.46	5.42	8.78	6.09	9.37	6.21	9.73	6.21	10.43	6.48	10.79	6.29
	34	6.80	5.34	7.44	5.41	8.75	6.08	9.25	6.15	9.57	6.13	10.21	6.40	10.56	6.20
	35	6.80	5.34	7.43	5.40	8.73	6.06	9.19	6.12	9.49	6.10	10.10	6.35	10.45	6.15
	36	6.80	5.34	7.42	5.40	8.66	6.03	9.14	6.10	9.40	6.06	9.92	6.28	10.25	6.06
	38	6.80	5.34	7.40	5.39	8.53	5.97	9.05	6.06	9.22	5.98	9.56	6.12	9.84	5.93
	39	6.80	5.34	7.39	5.39	8.47	5.95	9.01	6.04	9.13	5.94	9.38	6.05	9.64	5.85
	41	6.80	5.34	7.36	5.37	8.21	5.81	8.64	5.87	8.75	5.78	8.96	5.88	9.19	5.69
	43	6.80	5.34	7.34	5.36	7.96	5.70	8.27	5.70	8.36	5.60	8.54	5.72	8.74	5.53

Air flow (m³/min)	outdoor temp DB	WB	indoor temp 16℃CDB	18℃CDB	20℃CDB	22℃CDB	24℃CDB
Lo 19 (m³/min)	-19.8	-20	5.90	5.90	5.90	5.90	5.90
	-17.8	-18	6.28	6.28	6.28	6.28	6.28
	-15.7	-16	6.66	6.66	6.66	6.66	6.66
	-13.7	-14	7.04	7.04	7.04	7.04	7.04
	-11.7	-12	7.42	7.42	7.42	7.42	7.42
	-9.6	-10	7.80	7.80	7.80	7.80	7.80
	-7.5	-8	8.27	8.27	8.27	8.27	8.27
	-5.5	-6	8.75	8.75	8.75	8.75	8.75
	-3.4	-4	9.05	9.04	9.03	8.94	8.85
	-1.3	-2	9.36	9.33	9.31	9.13	8.95
	0.8	0	9.86	9.73	9.59	9.24	8.90
	3.9	3	10.70	10.32	9.94	9.38	8.82
	7.0	6	11.70	10.93	10.17	9.46	8.75
	10.1	9	11.62	10.88	10.13	9.40	8.67
	13.2	12	11.54	10.81	10.07	9.33	8.59
	16.9	15.5	11.45	10.72	9.98	9.24	8.50

Note(1) This data shows average statuses out of those possible to occur in the system control.
(Depending on controls, there may be ranges where the operation is not conducted continuously.)
(2) Symbols are as follows
TC :Total cooling capacity(kW)
SHC :Sensible heat capacity(kW)

PJG000Z022

Model **FDUM140KXE6F** Cool Mode

Air flow	Outdoor air temp.	Indoor air temperature 21℃CDB 14℃CWB TC	21℃CDB 14℃CWB SHC	23℃CDB 16℃CWB TC	23℃CDB 16℃CWB SHC	26℃CDB 18℃CWB TC	26℃CDB 18℃CWB SHC	27℃CDB 19℃CWB TC	27℃CDB 19℃CWB SHC	28℃CDB 20℃CWB TC	28℃CDB 20℃CWB SHC	31℃CDB 22℃CWB TC	31℃CDB 22℃CWB SHC	33℃CDB 24℃CWB TC	33℃CDB 24℃CWB SHC
P-Hi 39 (m³/min)	10			11.48	9.96	13.72	11.27	14.84	11.49	15.79	11.62	17.69	12.56	18.36	12.26
	12			11.48	9.96	13.72	11.27	14.84	11.49	15.77	11.61	17.62	12.53	18.28	12.23
	14			11.48	9.96	13.72	11.27	14.84	11.49	15.75	11.60	17.56	12.51	18.20	12.20
	16			11.48	9.96	13.72	11.27	14.84	11.49	15.72	11.59	17.49	12.49	18.13	12.18
	18			11.48	9.96	13.72	11.27	14.84	11.49	15.70	11.58	17.43	12.46	18.05	12.15
	20			11.48	9.96	13.72	11.27	14.84	11.49	15.68	11.57	17.37	12.44	17.97	12.13
	22			11.46	9.96	13.71	11.26	14.84	11.49	15.61	11.55	17.15	12.36	17.72	12.04
	24			11.44	9.95	13.71	11.26	14.84	11.49	15.54	11.52	16.93	12.28	17.48	11.96
	26			11.43	9.94	13.64	11.23	14.70	11.43	15.35	11.45	16.66	12.18	17.21	11.87
	28	10.36	9.84	11.42	9.94	13.58	11.21	14.56	11.38	15.17	11.38	16.39	12.09	16.94	11.79
	30	10.36	9.84	11.40	9.93	13.48	11.17	14.42	11.32	14.99	11.31	16.14	12.00	16.69	11.70
	32	10.36	9.84	11.37	9.92	13.37	11.12	14.28	11.26	14.82	11.24	15.89	11.91	16.43	11.62
	34	10.36	9.84	11.33	9.90	13.32	11.10	14.09	11.19	14.58	11.15	15.56	11.79	16.09	11.51
	35	10.36	9.84	11.31	9.89	13.30	11.09	14.00	11.15	14.46	11.10	15.39	11.73	15.92	11.45
	36	10.36	9.84	11.30	9.89	13.20	11.05	13.93	11.12	14.32	11.05	15.11	11.64	15.61	11.35
	38	10.36	9.84	11.27	9.87	13.00	10.97	13.79	11.07	14.05	10.95	14.56	11.44	15.00	11.16
	39	10.36	9.84	11.26	9.87	12.90	10.93	13.72	11.04	13.91	10.90	14.28	11.35	14.69	11.06
	41	10.36	9.84	11.22	9.85	12.51	10.78	13.16	10.82	13.32	10.68	13.65	11.13	14.00	10.84
	43	10.36	9.84	11.18	9.84	12.13	10.62	12.60	10.61	12.74	10.46	13.02	10.92	13.31	10.56

Heat Mode

Air flow (m³/min)	outdoor temp DB	outdoor temp WB	indoor temp 16℃CDB	18℃CDB	20℃CDB	22℃CDB	24℃CDB
P-Hi 39 (m³/min)	-19.8	-20	9.28	9.28	9.28	9.28	9.28
	-17.8	-18	9.88	9.88	9.88	9.88	9.88
	-15.7	-16	10.47	10.47	10.47	10.47	10.47
	-13.7	-14	11.07	11.07	11.07	11.07	11.07
	-11.7	-12	11.67	11.67	11.67	11.67	11.67
	-9.6	-10	12.27	12.27	12.27	12.27	12.27
	-7.5	-8	13.01	13.01	13.01	13.01	13.01
	-5.5	-6	13.76	13.76	13.76	13.76	13.76
	-3.4	-4	14.24	14.22	14.20	14.06	13.92
	-1.3	-2	14.72	14.68	14.64	14.36	14.08
	0.8	0	15.52	15.30	15.08	14.54	14.00
	3.9	3	16.84	16.24	15.64	14.76	13.88
	7.0	6	18.40	17.20	16.00	14.88	13.76
	10.1	9	18.28	17.11	15.94	14.79	13.64
	13.2	12	18.16	17.00	15.84	14.68	13.52
	16.9	15.5	18.02	16.86	15.70	14.54	13.38

Air flow	Outdoor air temp.	Indoor air temperature 21℃CDB 14℃CWB TC	21℃CDB 14℃CWB SHC	23℃CDB 16℃CWB TC	23℃CDB 16℃CWB SHC	26℃CDB 18℃CWB TC	26℃CDB 18℃CWB SHC	27℃CDB 19℃CWB TC	27℃CDB 19℃CWB SHC	28℃CDB 20℃CWB TC	28℃CDB 20℃CWB SHC	31℃CDB 22℃CWB TC	31℃CDB 22℃CWB SHC	33℃CDB 24℃CWB TC	33℃CDB 24℃CWB SHC
Hi 32 (m³/min)	10			11.29	9.01	13.49	10.19	14.60	10.42	15.53	10.56	17.40	11.41	18.06	11.11
	12			11.29	9.01	13.49	10.19	14.60	10.42	15.51	10.56	17.33	11.38	17.98	11.08
	14			11.29	9.01	13.49	10.19	14.60	10.42	15.49	10.55	17.27	11.36	17.91	11.06
	16			11.29	9.01	13.49	10.19	14.60	10.42	15.47	10.54	17.21	11.34	17.83	11.03
	18			11.29	9.01	13.49	10.19	14.60	10.42	15.45	10.53	17.14	11.31	17.75	11.00
	20			11.29	9.01	13.49	10.19	14.60	10.42	15.42	10.52	17.08	11.29	17.67	10.97
	22			11.27	9.00	13.49	10.19	14.60	10.42	15.35	10.49	16.86	11.20	17.43	10.89
	24			11.26	9.00	13.48	10.18	14.60	10.42	15.28	10.46	16.65	11.12	17.19	10.80
	26			11.25	8.99	13.42	10.16	14.46	10.37	15.10	10.39	16.39	11.02	16.93	10.71
	28	10.19	8.86	11.24	8.99	13.36	10.13	14.32	10.31	14.92	10.31	16.12	10.92	16.66	10.62
	30	10.19	8.86	11.21	8.98	13.25	10.08	14.18	10.25	14.75	10.24	15.88	10.81	16.41	10.51
	32	10.19	8.86	11.18	8.96	13.15	10.04	14.05	10.19	14.57	10.17	15.63	10.72	16.16	10.43
	34	10.19	8.86	11.14	8.95	13.10	10.02	13.86	10.11	14.34	10.08	15.30	10.59	15.83	10.32
	35	10.19	8.86	11.13	8.94	13.08	10.01	13.77	10.08	14.23	10.04	15.14	10.54	15.66	10.26
	36	10.19	8.86	11.11	8.93	12.98	9.97	13.70	10.05	14.09	9.98	14.86	10.43	15.36	10.16
	38	10.19	8.86	11.08	8.92	12.79	9.88	13.56	9.99	13.82	9.87	14.32	10.23	14.75	9.95
	39	10.19	8.86	11.07	8.91	12.69	9.84	13.49	9.96	13.68	9.82	14.05	10.14	14.45	9.85
	41	10.19	8.86	11.03	8.90	12.31	9.68	12.94	9.73	13.10	9.59	13.43	9.91	13.77	9.63
	43	10.19	8.86	10.99	8.88	11.93	9.52	12.39	9.51	12.53	9.37	12.80	9.69	13.09	9.41

Air flow (m³/min)	outdoor temp DB	outdoor temp WB	indoor temp 16℃CDB	18℃CDB	20℃CDB	22℃CDB	24℃CDB
Hi 32 (m³/min)	-19.8	-20	9.09	9.09	9.09	9.09	9.09
	-17.8	-18	9.68	9.68	9.68	9.68	9.68
	-15.7	-16	10.27	10.27	10.27	10.27	10.27
	-13.7	-14	10.85	10.85	10.85	10.85	10.85
	-11.7	-12	11.44	11.44	11.44	11.44	11.44
	-9.6	-10	12.02	12.02	12.02	12.02	12.02
	-7.5	-8	12.75	12.75	12.75	12.75	12.75
	-5.5	-6	13.48	13.48	13.48	13.48	13.48
	-3.4	-4	13.96	13.94	13.92	13.78	13.64
	-1.3	-2	14.43	14.39	14.35	14.07	13.80
	0.8	0	15.21	14.99	14.78	14.25	13.72
	3.9	3	16.50	15.92	15.33	14.46	13.60
	7.0	6	18.03	16.86	15.68	14.58	13.48
	10.1	9	17.91	16.77	15.62	14.49	13.37
	13.2	12	17.80	16.66	15.52	14.39	13.25
	16.9	15.5	17.66	16.52	15.39	14.25	13.11

Air flow	Outdoor air temp.	Indoor air temperature 21℃CDB 14℃CWB TC	21℃CDB 14℃CWB SHC	23℃CDB 16℃CWB TC	23℃CDB 16℃CWB SHC	26℃CDB 18℃CWB TC	26℃CDB 18℃CWB SHC	27℃CDB 19℃CWB TC	27℃CDB 19℃CWB SHC	28℃CDB 20℃CWB TC	28℃CDB 20℃CWB SHC	31℃CDB 22℃CWB TC	31℃CDB 22℃CWB SHC	33℃CDB 24℃CWB TC	33℃CDB 24℃CWB SHC
Me 26 (m³/min)	10			10.75	8.05	12.86	9.13	13.91	9.38	14.80	9.53	16.57	10.27	17.21	9.98
	12			10.75	8.05	12.86	9.13	13.91	9.38	14.78	9.52	16.51	10.24	17.13	9.95
	14			10.75	8.05	12.86	9.13	13.91	9.38	14.76	9.51	16.45	10.22	17.06	9.92
	16			10.75	8.05	12.86	9.13	13.91	9.38	14.74	9.50	16.39	10.19	16.99	9.89
	18			10.75	8.05	12.86	9.13	13.91	9.38	14.72	9.49	16.33	10.17	16.91	9.86
	20			10.75	8.05	12.86	9.13	13.91	9.38	14.70	9.48	16.27	10.13	16.84	9.82
	22			10.74	8.04	12.85	9.13	13.91	9.38	14.63	9.45	16.07	10.05	16.61	9.74
	24			10.72	8.03	12.85	9.13	13.91	9.38	14.56	9.42	15.86	9.96	16.38	9.65
	26			10.72	8.03	12.79	9.10	13.78	9.32	14.39	9.35	15.61	9.86	16.13	9.56
	28	9.71	7.91	10.71	8.03	12.73	9.07	13.64	9.26	14.22	9.27	15.36	9.76	15.88	9.47
	30	9.71	7.91	10.68	8.01	12.63	9.03	13.51	9.20	14.05	9.20	15.13	9.67	15.64	9.38
	32	9.71	7.91	10.65	8.00	12.53	8.97	13.38	9.14	13.89	9.13	14.89	9.57	15.40	9.29
	34	9.71	7.91	10.62	7.98	12.49	8.95	13.21	9.06	13.66	9.03	14.58	9.45	15.08	9.17
	35	9.71	7.91	10.60	7.98	12.46	8.94	13.12	9.02	13.55	8.99	14.42	9.38	14.92	9.11
	36	9.71	7.91	10.59	7.97	12.37	8.90	13.05	8.99	13.42	8.93	14.16	9.28	14.63	9.01
	38	9.71	7.91	10.56	7.96	12.18	8.81	12.92	8.94	13.16	8.82	13.64	9.08	14.05	8.81
	39	9.71	7.91	10.55	7.95	12.09	8.77	12.86	8.91	13.03	8.77	13.39	8.98	13.76	8.70
	41	9.71	7.91	10.51	7.93	11.73	8.61	12.33	8.67	12.49	8.53	12.79	8.74	13.12	8.47
	43	9.71	7.91	10.47	7.91	11.36	8.45	11.81	8.45	11.94	8.31	12.20	8.52	12.47	8.25

Air flow (m³/min)	outdoor temp DB	outdoor temp WB	indoor temp 16℃CDB	18℃CDB	20℃CDB	22℃CDB	24℃CDB
Me 26 (m³/min)	-19.8	-20	8.61	8.61	8.61	8.61	8.61
	-17.8	-18	9.17	9.17	9.17	9.17	9.17
	-15.7	-16	9.72	9.72	9.72	9.72	9.72
	-13.7	-14	10.28	10.28	10.28	10.28	10.28
	-11.7	-12	10.83	10.83	10.83	10.83	10.83
	-9.6	-10	11.39	11.39	11.39	11.39	11.39
	-7.5	-8	12.08	12.08	12.08	12.08	12.08
	-5.5	-6	12.77	12.77	12.77	12.77	12.77
	-3.4	-4	13.22	13.20	13.18	13.05	12.92
	-1.3	-2	13.66	13.62	13.59	13.33	13.07
	0.8	0	14.40	14.20	14.00	13.49	12.99
	3.9	3	15.63	15.07	14.52	13.70	12.88
	7.0	6	17.08	15.96	14.85	13.81	12.77
	10.1	9	16.97	15.88	14.79	13.73	12.66
	13.2	12	16.85	15.78	14.70	13.62	12.55
	16.9	15.5	16.72	15.65	14.57	13.49	12.42

Air flow	Outdoor air temp.	Indoor air temperature 21℃CDB 14℃CWB TC	21℃CDB 14℃CWB SHC	23℃CDB 16℃CWB TC	23℃CDB 16℃CWB SHC	26℃CDB 18℃CWB TC	26℃CDB 18℃CWB SHC	27℃CDB 19℃CWB TC	27℃CDB 19℃CWB SHC	28℃CDB 20℃CWB TC	28℃CDB 20℃CWB SHC	31℃CDB 22℃CWB TC	31℃CDB 22℃CWB SHC	33℃CDB 24℃CWB TC	33℃CDB 24℃CWB SHC
Lo 20 (m³/min)	10			9.62	6.84	11.49	7.78	12.43	8.03	13.23	8.18	14.82	8.81	15.39	8.54
	12			9.62	6.84	11.49	7.78	12.43	8.03	13.21	8.17	14.76	8.79	15.32	8.52
	14			9.62	6.84	11.49	7.78	12.43	8.03	13.19	8.16	14.71	8.76	15.25	8.49
	16			9.62	6.84	11.49	7.78	12.43	8.03	13.17	8.15	14.66	8.74	15.19	8.46
	18			9.62	6.84	11.49	7.78	12.43	8.03	13.16	8.15	14.60	8.71	15.12	8.43
	20			9.62	6.84	11.49	7.78	12.43	8.03	13.14	8.14	14.55	8.69	15.05	8.40
	22			9.60	6.83	11.49	7.78	12.43	8.03	13.08	8.11	14.37	8.61	14.85	8.31
	24			9.59	6.83	11.49	7.78	12.43	8.03	13.02	8.08	14.18	8.52	14.64	8.23
	26			9.58	6.82	11.43	7.75	12.32	7.97	12.86	8.01	13.96	8.42	14.42	8.14
	28	8.68	6.70	9.57	6.82	11.38	7.73	12.20	7.92	12.71	7.94	13.73	8.32	14.19	8.05
	30	8.68	6.70	9.55	6.81	11.29	7.68	12.08	7.86	12.56	7.87	13.53	8.23	13.98	7.96
	32	8.68	6.70	9.52	6.79	11.20	7.64	11.96	7.79	12.42	7.80	13.32	8.14	13.77	7.88
	34	8.68	6.70	9.49	6.78	11.16	7.62	11.81	7.72	12.22	7.71	13.03	8.02	13.48	7.77
	35	8.68	6.70	9.48	6.77	11.14	7.61	11.73	7.69	12.12	7.66	12.89	7.96	13.34	7.72
	36	8.68	6.70	9.47	6.77	11.06	7.57	11.67	7.66	12.00	7.60	12.66	7.86	13.08	7.62
	38	8.68	6.70	9.44	6.75	10.89	7.49	11.55	7.60	11.77	7.50	12.20	7.66	12.56	7.41
	39	8.68	6.70	9.43	6.75	10.81	7.45	11.50	7.58	11.65	7.45	11.97	7.57	12.31	7.32
	41	8.68	6.70	9.40	6.73	10.48	7.30	11.03	7.36	11.16	7.23	11.44	7.36	11.73	7.10
	43	8.68	6.70	9.36	6.71	10.16	7.15	10.56	7.15	10.67	7.02	10.90	7.14	11.15	6.89

Air flow (m³/min)	outdoor temp DB	outdoor temp WB	indoor temp 16℃CDB	18℃CDB	20℃CDB	22℃CDB	24℃CDB
Lo 20 (m³/min)	-19.8	-20	7.68	7.68	7.68	7.68	7.68
	-17.8	-18	8.17	8.17	8.17	8.17	8.17
	-15.7	-16	8.67	8.67	8.67	8.67	8.67
	-13.7	-14	9.16	9.16	9.16	9.16	9.16
	-11.7	-12	9.66	9.66	9.66	9.66	9.66
	-9.6	-10	10.15	10.15	10.15	10.15	10.15
	-7.5	-8	10.77	10.77	10.77	10.77	10.77
	-5.5	-6	11.39	11.39	11.39	11.39	11.39
	-3.4	-4	11.78	11.77	11.75	11.63	11.52
	-1.3	-2	12.18	12.15	12.11	11.88	11.65
	0.8	0	12.84	12.66	12.48	12.03	11.59
	3.9	3	13.94	13.44	12.94	12.21	11.49
	7.0	6	15.23	14.23	13.24	12.31	11.39
	10.1	9	15.13	14.16	13.19	12.24	11.29
	13.2	12	15.03	14.07	13.11	12.15	11.19
	16.9	15.5	14.91	13.95	12.99	12.03	11.07

Note(1) This data shows average statuses out of those possible to occur in the system control.
(Depending on controls, there may be ranges where the operation is not conducted continuously.)
(2) Symbols are as follows
TC :Total cooling capacity(kW)
SHC :Sensible heat capacity(kW)

PJG000Z022

Model **FDUM160KXE6F** Cool Mode

Air flow	Outdoor air temp.	Indoor air temperature 21℃CDB 14℃CWB TC	21℃CDB 14℃CWB SHC	23℃CDB 16℃CWB TC	23℃CDB 16℃CWB SHC	26℃CDB 18℃CWB TC	26℃CDB 18℃CWB SHC	27℃CDB 19℃CWB TC	27℃CDB 19℃CWB SHC	28℃CDB 20℃CWB TC	28℃CDB 20℃CWB SHC	31℃CDB 22℃CWB TC	31℃CDB 22℃CWB SHC	33℃CDB 24℃CWB TC	33℃CDB 24℃CWB SHC
P-Hi 48 (m³/min)	10			13.12	11.09	15.68	12.51	16.96	12.79	18.04	12.94	20.21	13.99	20.99	13.66
	12			13.12	11.09	15.68	12.51	16.96	12.79	18.02	12.93	20.14	13.96	20.90	13.61
	14			13.12	11.09	15.68	12.51	16.96	12.79	18.00	12.93	20.07	13.94	20.81	13.58
	16			13.12	11.09	15.68	12.51	16.96	12.79	17.97	12.92	19.99	13.91	20.72	13.56
	18			13.12	11.09	15.68	12.51	16.96	12.79	17.95	12.91	19.92	13.89	20.62	13.53
	20			13.12	11.09	15.68	12.51	16.96	12.79	17.92	12.90	19.85	13.84	20.53	13.50
	22			13.10	11.08	15.67	12.51	16.96	12.79	17.84	12.87	19.60	13.76	20.25	13.39
	24			13.08	11.08	15.67	12.51	16.96	12.79	17.75	12.84	19.34	13.67	19.97	13.30
	26			13.07	11.07	15.59	12.48	16.80	12.73	17.55	12.74	19.04	13.55	19.67	13.19
	28	11.84	10.95	13.06	11.07	15.52	12.45	16.64	12.65	17.34	12.67	18.73	13.45	19.36	13.09
	30	11.84	10.95	13.02	11.05	15.40	12.41	16.48	12.59	17.14	12.59	18.45	13.33	19.07	12.98
	32	11.84	10.95	12.99	11.04	15.28	12.36	16.32	12.53	16.93	12.50	18.16	13.24	18.78	12.90
	34	11.84	10.95	12.95	11.00	15.23	12.34	16.11	12.45	16.66	12.40	17.78	13.09	18.39	12.76
	35	11.84	10.95	12.93	10.99	15.20	12.33	16.00	12.39	16.53	12.36	17.59	13.03	18.20	12.70
	36	11.84	10.95	12.91	10.98	15.09	12.29	15.92	12.36	16.37	12.27	17.27	12.90	17.85	12.60
	38	11.84	10.95	12.88	10.97	14.86	12.18	15.76	12.30	16.05	12.16	16.64	12.62	17.14	12.30
	39	11.84	10.95	12.86	10.96	14.74	12.13	15.68	12.27	15.89	12.11	16.32	12.52	16.79	12.20
	41	11.84	10.95	12.82	10.95	14.30	11.94	15.04	12.01	15.23	11.85	15.60	12.29	16.00	11.98
	43	11.84	10.95	12.77	10.93	13.86	11.78	14.40	11.76	14.56	11.60	14.87	12.06	15.21	11.75

Heat Mode

Air flow (m³/min)	outdoor temp DB	outdoor temp WB	indoor temp 16℃CDB	18℃CDB	20℃CDB	22℃CDB	24℃CDB
P-Hi 48 (m³/min)	-19.8	-20	10.44	10.44	10.44	10.44	10.44
	-17.8	-18	11.11	11.11	11.11	11.11	11.11
	-15.7	-16	11.78	11.78	11.78	11.78	11.78
	-13.7	-14	12.46	12.46	12.46	12.46	12.46
	-11.7	-12	13.13	13.13	13.13	13.13	13.13
	-9.6	-10	13.80	13.80	13.80	13.80	13.80
	-7.5	-8	14.64	14.64	14.64	14.64	14.64
	-5.5	-6	15.48	15.48	15.48	15.48	15.48
	-3.4	-4	16.02	16.00	15.98	15.82	15.66
	-1.3	-2	16.56	16.52	16.47	16.16	15.84
	0.8	0	17.46	17.21	16.97	16.36	15.75
	3.9	3	18.95	18.27	17.60	16.61	15.62
	7.0	6	20.70	19.35	18.00	16.74	15.48
	10.1	9	20.57	19.25	17.93	16.64	15.35
	13.2	12	20.43	19.13	17.82	16.52	15.21
	16.9	15.5	20.27	18.97	17.66	16.36	15.05

Air flow	Outdoor air temp.	Indoor air temperature 21℃CDB 14℃CWB TC	21℃CDB 14℃CWB SHC	23℃CDB 16℃CWB TC	23℃CDB 16℃CWB SHC	26℃CDB 18℃CWB TC	26℃CDB 18℃CWB SHC	27℃CDB 19℃CWB TC	27℃CDB 19℃CWB SHC	28℃CDB 20℃CWB TC	28℃CDB 20℃CWB SHC	31℃CDB 22℃CWB TC	31℃CDB 22℃CWB SHC	33℃CDB 24℃CWB TC	33℃CDB 24℃CWB SHC
Hi 35 (m³/min)	10			12.90	9.64	15.42	10.94	16.68	11.24	17.75	11.43	19.88	12.29	20.65	11.97
	12			12.90	9.64	15.42	10.94	16.68	11.24	17.73	11.42	19.81	12.27	20.56	11.94
	14			12.90	9.64	15.42	10.94	16.68	11.24	17.70	11.41	19.74	12.24	20.47	11.89
	16			12.90	9.64	15.42	10.94	16.68	11.24	17.68	11.40	19.67	12.22	20.38	11.86
	18			12.90	9.64	15.42	10.94	16.68	11.24	17.65	11.37	19.60	12.19	20.29	11.83
	20			12.90	9.64	15.42	10.94	16.68	11.24	17.63	11.36	19.52	12.16	20.20	11.78
	22			12.88	9.63	15.42	10.94	16.68	11.24	17.55	11.33	19.28	12.06	19.92	11.68
	24			12.87	9.63	15.41	10.94	16.68	11.24	17.47	11.30	19.03	11.95	19.65	11.59
	26			12.85	9.62	15.34	10.89	16.53	11.17	17.26	11.20	18.73	11.83	19.35	11.47
	28	11.65	9.47	12.84	9.62	15.27	10.86	16.37	11.10	17.06	11.11	18.43	11.70	19.05	11.36
	30	11.65	9.47	12.81	9.60	15.15	10.82	16.21	11.02	16.86	11.03	18.15	11.59	18.76	11.25
	32	11.65	9.47	12.78	9.59	15.03	10.75	16.05	10.96	16.66	10.94	17.87	11.47	18.48	11.14
	34	11.65	9.47	12.74	9.57	14.98	10.73	15.84	10.86	16.39	10.82	17.49	11.32	18.09	10.96
	35	11.65	9.47	12.72	9.56	14.95	10.72	15.74	10.82	16.26	10.77	17.30	11.24	17.90	10.90
	36	11.65	9.47	12.70	9.55	14.84	10.64	15.66	10.77	16.10	10.69	16.99	11.09	17.56	10.79
	38	11.65	9.47	12.67	9.54	14.61	10.55	15.50	10.71	15.79	10.58	16.37	10.88	16.86	10.56
	39	11.65	9.47	12.65	9.53	14.50	10.50	15.43	10.68	15.64	10.47	16.06	10.76	16.51	10.43
	41	11.65	9.47	12.61	9.50	14.07	10.33	14.80	10.39	14.98	10.22	15.35	10.48	15.74	10.15
	43	11.65	9.47	12.57	9.48	13.63	10.14	14.17	10.12	14.32	9.96	14.63	10.20	14.96	9.88

Air flow (m³/min)	outdoor temp DB	outdoor temp WB	indoor temp 16℃CDB	18℃CDB	20℃CDB	22℃CDB	24℃CDB
Hi 35 (m³/min)	-19.8	-20	10.23	10.23	10.23	10.23	10.23
	-17.8	-18	10.89	10.89	10.89	10.89	10.89
	-15.7	-16	11.55	11.55	11.55	11.55	11.55
	-13.7	-14	12.21	12.21	12.21	12.21	12.21
	-11.7	-12	12.87	12.87	12.87	12.87	12.87
	-9.6	-10	13.52	13.52	13.52	13.52	13.52
	-7.5	-8	14.35	14.35	14.35	14.35	14.35
	-5.5	-6	15.17	15.17	15.17	15.17	15.17
	-3.4	-4	15.70	15.68	15.66	15.50	15.35
	-1.3	-2	16.23	16.18	16.14	15.83	15.52
	0.8	0	17.11	16.87	16.63	16.03	15.44
	3.9	3	18.57	17.90	17.24	16.27	15.30
	7.0	6	20.29	18.96	17.64	16.41	15.17
	10.1	9	20.15	18.86	17.57	16.31	15.04
	13.2	12	20.02	18.74	17.46	16.18	14.91
	16.9	15.5	19.87	18.59	17.31	16.03	14.75

Air flow	Outdoor air temp.	Indoor air temperature 21℃CDB 14℃CWB TC	21℃CDB 14℃CWB SHC	23℃CDB 16℃CWB TC	23℃CDB 16℃CWB SHC	26℃CDB 18℃CWB TC	26℃CDB 18℃CWB SHC	27℃CDB 19℃CWB TC	27℃CDB 19℃CWB SHC	28℃CDB 20℃CWB TC	28℃CDB 20℃CWB SHC	31℃CDB 22℃CWB TC	31℃CDB 22℃CWB SHC	33℃CDB 24℃CWB TC	33℃CDB 24℃CWB SHC
Me 28 (m³/min)	10			12.07	8.60	14.42	9.77	15.60	10.08	16.60	10.27	18.60	11.07	19.31	10.74
	12			12.07	8.60	14.42	9.77	15.60	10.08	16.58	10.27	18.53	11.04	19.22	10.70
	14			12.07	8.60	14.42	9.77	15.60	10.08	16.56	10.26	18.46	11.02	19.14	10.67
	16			12.07	8.60	14.42	9.77	15.60	10.08	16.53	10.25	18.39	10.98	19.06	10.64
	18			12.07	8.60	14.42	9.77	15.60	10.08	16.51	10.24	18.33	10.95	18.97	10.59
	20			12.07	8.60	14.42	9.77	15.60	10.08	16.49	10.23	18.26	10.93	18.89	10.56
	22			12.05	8.57	14.42	9.77	15.60	10.08	16.41	10.18	18.03	10.81	18.63	10.45
	24			12.03	8.56	14.41	9.77	15.60	10.08	16.33	10.15	17.80	10.71	18.38	10.35
	26			12.02	8.55	14.35	9.74	15.46	10.00	16.14	10.06	17.52	10.59	18.09	10.23
	28	10.89	8.41	12.01	8.55	14.28	9.70	15.31	9.93	15.95	9.97	17.24	10.46	17.81	10.10
	30	10.89	8.41	11.98	8.54	14.17	9.65	15.16	9.87	15.77	9.87	16.97	10.32	17.54	10.00
	32	10.89	8.41	11.95	8.52	14.06	9.59	15.01	9.79	15.58	9.79	16.71	10.22	17.28	9.90
	34	10.89	8.41	11.91	8.50	14.01	9.57	14.82	9.70	15.33	9.68	16.36	10.08	16.92	9.77
	35	10.89	8.41	11.89	8.50	13.98	9.56	14.72	9.66	15.21	9.63	16.18	10.00	16.74	9.69
	36	10.89	8.41	11.88	8.49	13.88	9.52	14.65	9.63	15.06	9.56	15.89	9.87	16.42	9.57
	38	10.89	8.41	11.85	8.48	13.67	9.41	14.50	9.56	14.77	9.43	15.31	9.64	15.77	9.31
	39	10.89	8.41	11.83	8.47	13.56	9.35	14.43	9.53	14.62	9.36	15.02	9.52	15.44	9.16
	41	10.89	8.41	11.79	8.45	13.16	9.17	13.84	9.25	14.01	9.09	14.35	9.22	14.72	8.93
	43	10.89	8.41	11.75	8.43	12.75	8.96	13.25	8.95	13.39	8.80	13.68	8.97	13.99	8.67

Air flow (m³/min)	outdoor temp DB	outdoor temp WB	indoor temp 16℃CDB	18℃CDB	20℃CDB	22℃CDB	24℃CDB
Me 28 (m³/min)	-19.8	-20	9.60	9.60	9.60	9.60	9.60
	-17.8	-18	10.22	10.22	10.22	10.22	10.22
	-15.7	-16	10.84	10.84	10.84	10.84	10.84
	-13.7	-14	11.46	11.46	11.46	11.46	11.46
	-11.7	-12	12.08	12.08	12.08	12.08	12.08
	-9.6	-10	12.70	12.70	12.70	12.70	12.70
	-7.5	-8	13.47	13.47	13.47	13.47	13.47
	-5.5	-6	14.24	14.24	14.24	14.24	14.24
	-3.4	-4	14.74	14.72	14.70	14.55	14.41
	-1.3	-2	15.24	15.19	15.15	14.86	14.57
	0.8	0	16.06	15.84	15.61	15.05	14.49
	3.9	3	17.43	16.81	16.19	15.28	14.37
	7.0	6	19.04	17.80	16.56	15.40	14.24
	10.1	9	18.92	17.71	16.50	15.31	14.12
	13.2	12	18.80	17.60	16.39	15.19	13.99
	16.9	15.5	18.65	17.45	16.25	15.05	13.85

Air flow	Outdoor air temp.	Indoor air temperature 21℃CDB 14℃CWB TC	21℃CDB 14℃CWB SHC	23℃CDB 16℃CWB TC	23℃CDB 16℃CWB SHC	26℃CDB 18℃CWB TC	26℃CDB 18℃CWB SHC	27℃CDB 19℃CWB TC	27℃CDB 19℃CWB SHC	28℃CDB 20℃CWB TC	28℃CDB 20℃CWB SHC	31℃CDB 22℃CWB TC	31℃CDB 22℃CWB SHC	33℃CDB 24℃CWB TC	33℃CDB 24℃CWB SHC
Lo 22 (m³/min)	10			10.99	7.53	13.14	8.60	14.21	8.91	15.12	9.11	16.94	9.83	17.59	9.51
	12			10.99	7.53	13.14	8.60	14.21	8.91	15.10	9.10	16.88	9.80	17.51	9.47
	14			10.99	7.53	13.14	8.60	14.21	8.91	15.08	9.09	16.82	9.77	17.44	9.45
	16			10.99	7.53	13.14	8.60	14.21	8.91	15.06	9.08	16.76	9.74	17.36	9.41
	18			10.99	7.53	13.14	8.60	14.21	8.91	15.04	9.07	16.70	9.71	17.29	9.37
	20			10.99	7.53	13.14	8.60	14.21	8.91	15.02	9.06	16.63	9.68	17.21	9.34
	22			10.98	7.52	13.14	8.60	14.21	8.91	14.95	9.03	16.42	9.57	16.98	9.23
	24			10.96	7.51	13.13	8.60	14.21	8.91	14.88	8.99	16.21	9.47	16.74	9.11
	26			10.95	7.51	13.07	8.57	14.08	8.84	14.71	8.91	15.96	9.33	16.48	9.01
	28	9.92	7.35	10.94	7.50	13.01	8.54	13.95	8.78	14.53	8.82	15.70	9.22	16.23	8.90
	30	9.92	7.35	10.92	7.49	12.91	8.49	13.81	8.70	14.36	8.73	15.46	9.11	15.98	8.79
	32	9.92	7.35	10.89	7.48	12.81	8.43	13.68	8.64	14.19	8.64	15.22	8.99	15.74	8.69
	34	9.92	7.35	10.85	7.46	12.76	8.41	13.50	8.54	13.97	8.53	14.90	8.84	15.42	8.53
	35	9.92	7.35	10.84	7.46	12.74	8.40	13.41	8.50	13.85	8.46	14.74	8.76	15.25	8.47
	36	9.92	7.35	10.82	7.45	12.64	8.35	13.34	8.47	13.72	8.40	14.48	8.64	14.96	8.36
	38	9.92	7.35	10.80	7.43	12.45	8.25	13.21	8.40	13.45	8.28	13.95	8.41	14.36	8.10
	39	9.92	7.35	10.78	7.42	12.36	8.20	13.14	8.37	13.32	8.21	13.68	8.28	14.07	7.98
	41	9.92	7.35	10.74	7.40	11.98	8.01	12.61	8.10	12.76	7.94	13.07	8.00	13.41	7.73
	43	9.92	7.35	10.71	7.39	11.61	7.82	12.07	7.84	12.20	7.67	12.47	7.76	12.75	7.46

Air flow (m³/min)	outdoor temp DB	outdoor temp WB	indoor temp 16℃CDB	18℃CDB	20℃CDB	22℃CDB	24℃CDB
Lo 22 (m³/min)	-19.8	-20	8.39	8.39	8.39	8.39	8.39
	-17.8	-18	8.93	8.93	8.93	8.93	8.93
	-15.7	-16	9.47	9.47	9.47	9.47	9.47
	-13.7	-14	10.01	10.01	10.01	10.01	10.01
	-11.7	-12	10.55	10.55	10.55	10.55	10.55
	-9.6	-10	11.09	11.09	11.09	11.09	11.09
	-7.5	-8	11.77	11.77	11.77	11.77	11.77
	-5.5	-6	12.44	12.44	12.44	12.44	12.44
	-3.4	-4	12.88	12.86	12.84	12.72	12.59
	-1.3	-2	13.31	13.28	13.24	12.99	12.73
	0.8	0	14.04	13.84	13.64	13.15	12.66
	3.9	3	15.23	14.69	14.14	13.35	12.55
	7.0	6	16.64	15.56	14.47	13.46	12.44
	10.1	9	16.53	15.47	14.42	13.38	12.34
	13.2	12	16.42	15.37	14.33	13.28	12.23
	16.9	15.5	16.30	15.25	14.20	13.15	12.10

Note(1) This data shows average statuses out of those possible to occur in the system control.
(Depending on controls, there may be ranges where the operation is not conducted continuously.)
(2) Symbols are as follows
TC :Total cooling capacity(kW)
SHC :Sensible heat capacity(kW)

PJG000Z022

7 APPLICATION DATA

PJG012D001

7.1 Installation of indoor unit

This manual is for the installation of an indoor unit.
For electrical wiring work (Indoor), refer to the electrical wiring work installation manual. For remote controller installation, refer to the installation manual attached to a remote controller. For wireless kit installation, refer to the installation manual attached to a wireless kit. For electrical wiring work (Outdoor) and refrigerant pipe work installation for outdoor unit, refer to the installation manual attached to outdoor unit.

SAFETY PRECAUTIONS

- Read the "SAFETY PRECAUTIONS" carefully first of all and then strictly follow it during the installation work in order to protect yourself.
- The precautionary items mentioned below are distinguished into two levels, ⚠WARNING and ⚠CAUTION .
  ⚠WARNING : Wrong installation would cause serious consequences such as injuries or death.
  ⚠CAUTION : Wrong installation might cause serious consequences depending on circumstances.
  Both mentions the important items to protect your health and safety so strictly follow them by any means.
- The meanings of "Marks" used here are as shown on the right:
  ⃠ Never do it under any circumstances. | ❗ Always do it according to the instruction.
- After completing the installation, do commissioning to confirm there are no abnormalities, and explain to the customers about "SAFETY PRECAUTIONS", correct operation method and maintenance method (air filter cleaning, operation method and temperature setting method) with user's manual of this unit.
  Ask your customers to keep this installation manual together with the user's manual. Also, ask them to hand over the user's manual to the new user when the owner is changed.

⚠ WARNING

- **Installation should be performed by the specialist.**
  If you install the unit by yourself, it may lead to serious trouble such as water leakage, electric shock, fire, and injury due to overturn of the unit.
- **Install the system correctly according to these installation manuals.**
  Improper installation may cause explosion, injury, water leakage, electric shock, and fire.
- **Check the density refered by the foumula (accordance with ISO5149).**
  If the density exceeds the limit density, please consult the dealer and installate the ventilation system.
- **Use the genuine accessories and the specified parts for installation.**
  If parts unspecified by our company are used it could cause water leakage, electric shock, fire, and injury due to overturn of the unit.
- **Ventilate the working area well in case the refrigerant leaks during installation.**
  If the refrigerant contacts the fire, toxic gas is produced.
- **Install the unit in a location that can hold heavy weight.**
  Improper installation may cause the unit to fall leading to accidents.
- **Install the unit properly in order to be able to withstand strong winds such as typhoons, and earthquakes.**
  Improper installation may cause the unit to fall leading to accidents.
- **Do not mix air in to the cooling cycle on installation or removal of the air conditioner.**
  If air is mixed in, the pressure in the cooling cycle will rise abnormally and may cause explosion and injuries.
- **Be sure to have the electrical wiring work done by qualified electrical installer, and use exclusive circuit.**
  Power source with insufficient capacity and improper work can cause electric shock and fire.
- **Use specified wire for electrical wiring, fasten the wiring to the terminal securely, and hold the cable securely in order not to apply unexpected stress on the terminal.**
  Loose connections or hold could result in abnormal heat generation or fire.
- **Arrange the electrical wires in the control box properly to prevent them from rising. Fit the lid of the services panel property.**
  Improper fitting may cause abnormal heat and fire.
- **Check for refrigerant gas leakage after installation is completed.**
  If the refrigerant gas leaks into the house and comes in contact with a fan heater, a stove, or an oven, toxic gas is produced.
- **Use the specified pipe, flare nut, and tools for R410A.**
  Using existing parts (R22) could cause the unit failure and serious accident due to explosion of the cooling cycle.
- **Tighten the flare nut according to the specified method by with torque wrench.**
  If the flare nut were tightened with excess torque, it could cause burst and refrigerant leakage after a long period.
- **Do not put the drainage pipe directly into drainage channels where poisonous gases such as sulfide gas can occur.**
  Poisonous gases will flow into the room through drainage pipe and seriously affect the user's health and safety. This can also cause the corrosion of the indoor unit and a resultant unit failure or refrigerant leak.
- **Connect the pipes for refrigeration circuit securely in installation work before compressor is operated.**
  If the compressor is operated when the service valve is open without connecting the pipe, it could cause explosion and injuries due to abnormal high pressure in the system.
- **Stop the compressor before removing the pipe after shutting the service valve on pump down work.**
  If the pipe is removed when the compressor is in operation with the service valve open, air would be mixed in the refrigeration circuit and it could cause explosion and injuries due to abnormal high pressure in the cooling cycle.
- **Only use prescribed optional parts. The installation must be carried out by the qualified installer.**
  If you install the system by yourself, it can cause serious trouble such as water leaks, electric shocks, fire.
- **Do not repair by yourself. And consult with the dealer about repair.**
  Improper repair may cause water leakage, electric shock or fire.
- **Consult the dealer or a specialist about removal of the air conditioner.**
  Improper installation may cause water leakage, electric shock or fire.
- **Turn off the power source during servicing or inspection work.**
  If the power is supplied during servicing or inspection work, it could cause electric shock and injury by the operating fan.
- **Do not run the unit when the panel or protection guard are taken off.**
  Touching the rotating equipment, hot surface, or high voltage section could cause an injury to be caught in the machine, to get burned, or electric shock.
- **Shut off the power before electrical wiring work.**
  It could cause electric shock, unit failure and improper running.

⚠ CAUTION

- **Perform earth wiring surely.**
  Do not connect the earth wiring to the gas pipe, water pipe, lightning rod and telephone earth wiring. Improper earth could cause unit failure and electric shock or fire due to a short circuit.
- **Earth leakage breaker must be installed.**
  If the earth leakage breaker is not installed, it could cause electric shocks or fire.
- **Use the circuit breaker of correct capacity. Circuit breaker should be the one that disconnect all poles under over current.**
  Using the incorrect one could cause the system failure and fire.
- **Do not use any materials other than a fuse of correct capacity where a fuse should be used.**
  Connecting the circuit by wire or copper wire could cause unit failure and fire.
- **Do not install the indoor unit near the location where there is possibility of flammable gas leakages.**
  If the gas leaks and gathers around the unit, it could cause fire.
- **Do not install and use the unit where corrosive gas (such as sulfurous acid gas etc.) or flammable gas (such as thinner, petroleum etc.) may be generated or accumulated, or volatile flammable substances are handled.**
  It could cause the corrosion of heat exchanger, breakage of plastic parts etc. And inflammable gas could cause fire.
- **Secure a space for installation, inspection and maintenance specified in the manual.**
  Insufficient space can result in accident such as personal injury due to falling from the installation place.
- **Do not use the indoor unit at the place where water splashes such as laundry.**
  Indoor unit is not waterproof. It could cause electric shock and fire.
- **Do not use the indoor unit for a special purpose such as food storage, cooling for precision instrument, preservation of animals, plants, and a work of art.**
  It could cause the damage of the items.
- **Do not install nor use the system near equipments which generate electromagnetic wave or high harmonics.**
  Equipments like inverter equipment, private power generator, high-frequency medical equipment, or telecommunication equipment might influence the air conditioner and cause a malfunction and breakdown. Or the air conditioner might influence medical equipments or telecommunication equipments, and obstruct their medical activity or cause jamming.
- **Do not install the remote controller at the direct sunlight.**
  It could cause breakdown or deformation of the remote controller.
- **Do not install the indoor unit at the place listed below.**
  · Places where flammable gas could leak.
  · Places where carbon fiber, metal powder or any powder is floated.
  · Place where the substances which affect the air conditioner are generated such as sulfide gas, chloride gas, acid, alkali or ammonic atmospheres.
  · Places exposed to oil mist or steam directly.
  · On vehicles and ships
  · Places where machinery which generates high harmonics is used.
  · Places where cosmetics or special sprays are frequently used.
  · Highly salted area such as beach.
  · Heavy snow area
  · Places where the system is affected by smoke from a chimney.
  · Altitude over 1000m
- **Do not install the indoor unit in the locations listed below (Be sure to install the indoor unit according to the installation manual for each model because each indoor unit has each limitation)**
  · Locations with any obstacles which can prevent inlet and outlet air of the unit
  · Locations where vibration can be amplified due to insufficient strength of structure.
  · Locations where the infrared receiver is exposed to the direct sunlight or the strong light beam. (in case of the infrared specification unit)
  · Locations where an equipment affected by high harmonics is placed. (TV set or radio receiver is placed within 5m)
  · Locations where drainage cannot run off safely.
  It can affect performance or function and etc..
- **Do not put any valuables which will break down by getting wet under the air conditioner.**
  Condensation could drop when the relative humidity is higher than 80% or drain pipe is clogged, and it damages user's belongings.
- **Do not use the base frame for the outdoor unit which is corroded or damaged after a long period of use.**
  It could cause the unit falling down and injury.
- **Pay attention not to damage the drain pan by weld sputter when brazing work is done near the unit.**
  If sputter entered into the unit during brazing work, it could cause damage (pinhole) of drain pan and leakage of water. To avoid damaging, keep the indoor unit packed or cover the indoor unit.
- **Install the drain pipe to drain the water surely according to the installation manual.**
  Improper connection of the drain pipe may cause dropping water into room and damaging user's belongings.
- **Do not share the drain pipe for indoor unit and GHP (Gas Heat Pump system) outdoor unit.**
  Toxic exhaust gas would flow into room and it might cause serious damage (some poisoning or deficiency of oxygen) to user's health and safety.
- **Be sure to perform air tightness test by pressurizing with nitrogen gas after completed refrigerant piping work.**
  If the density of refrigerant exceeds the limit in the event of refrigerant leakage in the small room, lack of oxygen can occur, which can cause serious accidents.
- **For drain pipe installation, be sure to make descending slope of greater than 1/100, not to make traps, and not to make air-bleeding.**
  Check if the drainage is correctly done during commissioning and ensure the space for inspection and maintenance.
- **Ensure the insulation on the pipes for refrigeration circuit so as not to condense water.**
  Incomplete insulation could cause condensation and it would wet ceiling, floor, and any other valuables.
- **Do not install the outdoor unit where is likely to be a nest for insects and small animals.**
  Insects and small animals could come into the electronic components and cause breakdown and fire. Instruct the user to keep the surroundings clean.
- **Pay extra attention, carrying the unit by hand.**
  Carry the unit with 2 people if it is heavier than 20kg. Do not use the plastic straps but the grabbing place, moving the unit by hand. Use protective gloves in order to avoid injury by the aluminum fin.
- **Make sure to dispose of the packaging material.**
  Leaving the materials may cause injury as metals like nail and woods are used in the package.
- **Do not operate the system without the air filter.**
  It may cause the breakdown of the system due to clogging of the heat exchanger.
- **Do not touch any button with wet hands.**
  It could cause electric shock.
- **Do not touch the refrigerant piping with bare hands when in operation.**
  The pipe during operation would become very hot or cold according to the operating condition, and it could cause a burn or frostbite.
- **Do not clean up the air conditioner with water.**
  It could cause electric shock.
- **Do not turn off the power source immediately after stopping the operation.**
  Be sure to wait for more than 5 minutes. Otherwise it could cause water leakage or breakdown.
- **Do not control the operation with the circuit breaker.**
  It could cause fire or water leakage. In addition, the fan may start operation unexpectedly and it may cause injury.

○This model is middle static ducted type air conditioning unit. Therefore, do not use this model for direct blow type air conditioning unit.

①Before installation

●Install correctly according to the installation manual.

●Confirm the following points:

○Unit type/Power supply specification ○Pipes/Wires/Small parts ○Accessory items

Accessory item

For hanging	For refrigerant pipe			For drain pipe			
Flat washer (M10)	Pipe cover (big)	Pipe cover (small)	Strap	Pipe cover (big)	Pipe cover (small)	Drain hose	Hose clamp
8	1	1	4	1	1	1	1
For unit hanging	For heat insulation of gas pipe	For heat insulation of liquid tube	For pipe cover fixing	For heat insulation of drain socket	For heat insulation of drain socket	For drain pipe connecting	For drain hose mounting

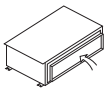

Accessory parts are stored inside this suction side.

②Selection of installation location for the indoor unit

① Select the suitable areas to install the unit under approval of the user.

- Areas where the indoor unit can deliver hot and cold wind sufficiently. Suggest to the user to use a circulator if the ceiling height is over 3m to avoid warm air being accumulated on the ceiling.
- Areas where there is enough space to install and service.
- Areas where it can be drained properly. Areas where drain pipe descending slope can be taken.
- Areas where there is no obstruction of airflow on both air return grille and air supply port.
- Areas where fire alarm will not be accidentally activated by the air conditioner.
- Areas where the supply air does not short-circuit.
- Areas where it is not influenced by draft air.
- Areas not exposed to direct sunlight.
- Areas where dew point is lower than around 28°C and relative humidity is lower than 80%.

  This indoor unit is tested under the condition of JIS (Japan Industrial Standard) high humidity condition and confirmed there is no problem. However, there is some risk of condensation drop if the air conditioner is operated under the severer condition than mentioned above. If there is a possibility to use it under such a condition, attach additional insulation of 10 to 20mm thick for entire surface of indoor unit, refrigeration pipe and drain pipe.
- Areas where TV and radio stays away more than 1m. (It could cause jamming and noise.)
- Areas where any items which will be damaged by getting wet are not placed such as food, table wares, server, or medical equipment under the unit.
- Areas where there is no influence by the heat which cookware generates.
- Areas where not exposed to oil mist, powder and/or steam directly such as above fryer.
- Areas where lighting device such as fluorescent light or incandescent light doesn't affect the operation.
  (A beam from lighting device sometimes affects the infrared receiver for the wireless remote controller and the air conditioner might not work properly.)

② Check if the place where the air conditioner is installed can hold the weight of the unit. If it is not able to hold, reinforce the structure with boards and beams strong enough to hold it. If the strength is not enough, it could cause injury due to unit falling.

Space for installation and service

●Make installation altitude over 2.5m.

(Indoor Unit)

Select either of two cases to keep space for installation and services.

(Case 1) From side of unit

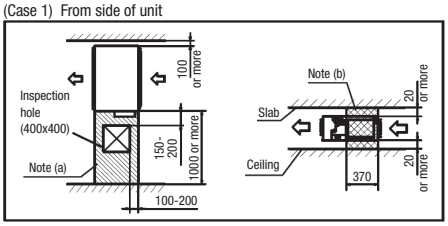

Notes (a) There must not be obstacle to draw out fan motor. (marked area)

(b) Install refrigerant pipe, drain pipe, and wiring so as not to cross marked area.

(Case 2) From button of unit

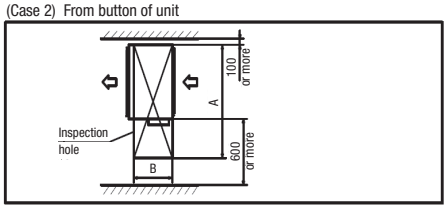

(Size of inspection hole)

Single type	50-71	100-140
Multi type	22-90	112-160
A	1100	1300
B	620	740

③Preparation before installation

●If suspension bolt becomes longer, do reinforcement of earthquake resistant.

○For grid ceiling

When the suspension bolt length is over 500mm, or the gap between the ceiling and roof is over 700mm, apply earthquake resistant brace to the bolt.

○In case the unit is hanged directly from the slab and is installed on the ceiling plane which has enough strength.

When suspension bolt length is over 1000mm, apply the earthquake resistant brace to the bolt.

●Prepare four (4) sets of suspension bolt, nut and spring washer (M10) on site.

Suspension Bolt Location

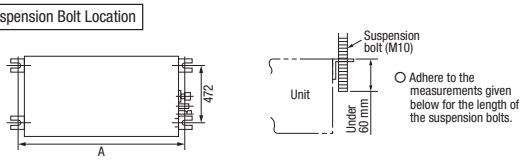

UNIT: mm

Multi type	22-56	71, 90	112-160
Single type	50	60, 71	100-140
A	786	986	1404

Pipe locations UNIT: mm

Multi type	22-90
Single type	50-71

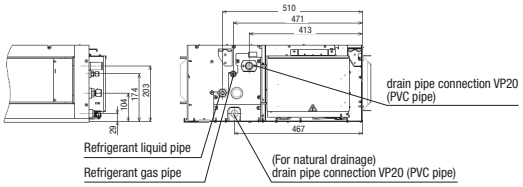

Multi type	112-160
Single type	100-140

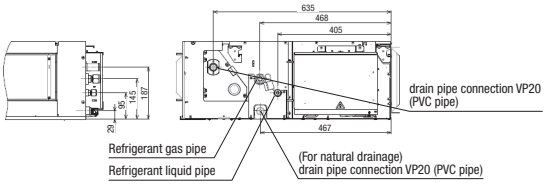

④Installation of indoor unit

Installation

[Hanging]

Hang the unit up.

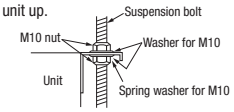

If the measurements between the unit and the ceiling hole do not match upon installation, it may be adjusted with the long holed installation tool.

Adjustment for horizontality

○Either use a level vial, or adjust the level according to the method below.

●Adjust so the bottom side of the unit will be leveled with the water surface as illustrated below.

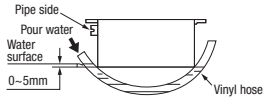

Let the pipe side be slightly sloped.

○If the unit is not leveled, it may cause malfunctions or inoperation of the float switch.

⑤Duct Work

①A corrugated board (for preventing sputtering) is attached to the main body of the air conditioner (on the outlet port). Do not remove it until connecting the duct.

●An air filter can be provided on the main body of the air conditioner (on the inlet port). Remove it when connecting the duct on the inlet port.

②Blowout duct

●Use rectangular duct to connect with unit.
Duct size for each unit is as shown below.

Single type	50	60-71	100-140
Multi type	22-56	71-90	112-140
A	682	882	1470
B	172	172	590

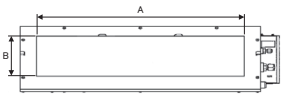

●Duct should be at their minimum length.

●We recommend to use sound and heat insulated duct to prevent it from condensation.

●Connect duct to unit before ceiling attachment.

③Inlet port

●When shipped the inlet port lies on the back.

●When connecting the duct to the inlet port, remove the air filter if it is fitted to the inlet port.

●When placing the inlet port to carry out suction from the bottom side, use the following procedure to replace the suction duct joint and the bottom plate.

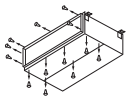

●Remove the screws which fasten the bottom plate and the duct joint on the inlet port side of the unit.

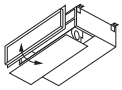

●Replace the removed bottom plate and duct joint.

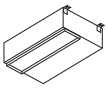

●Fit the duct join with a screw; fit the bottom plate.

●Make sure to insulate the duct to prevent dewing on it.

④Install the specific blowout duct in a location where the air will circulate to the entire room.

●Conduct the installation of the specific blowout hole and the connection of the duct before attaching them to the ceiling.

●Insulate the area where the duct is secured by a band for dew condensation prevention.

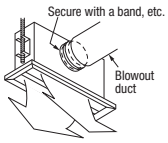

⑤Make sure provide an inspection hole on the ceiling. It is indispensable to service elecric equipment, motor, functional components and cleaning of heat exchanger.

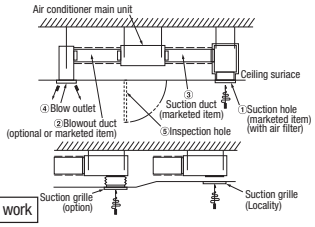

Bad example of duct work

①If a duct is not provided at the suction side but it is substituted with the space over the ceiling, humidity in the space will increase by the influence of capacity of ventilation fan, strength of wind blowing against the out door air louver, weather (rainy day) and others.

a)Moisture in air is likely to condense over the external plates of the unit and to drip on the ceiling. Unit should be operated under the conditions as listed in the above table and within the limitation of wind volume. When the building is a concrete structure, especially immediately after the construction, humidity tends to rise even if the space over the ceiling is not substituted in place of a duct. In such occasion, it is necessary to insulate the entire unit with glass wool (25mm). (Use a wire net or equivalent to hold the glass wool in place.)

b)It may run out the allowable limit of unit operation (Example: When outdoor air temperature is 35°C DB, suction air temperature is 27°C WB) and it could result in such troubles as compressor overload, etc..

c)There is a possibility that the blow air volume may exceed the allowable range of operation due to the capacity of ventilation fan or strength of wind blowing against external air louver so that drainage from be heat exchanger may fall to reach the drain pan but leak outside (Example: drip on to the ceiling) with consequential water leakage in the room.

②If vibration damping is not conducted between the unit and the duct, and between the unit and the slab, vibration will be transmitted to the duct and vibration noise may occur. Also, vibration may be transmitted from the unit to the slab. Vibration damping must be performed.

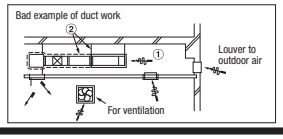

⑤Duct Work (continued)

Connecting the air intake/vent ducts

①Fresh Air Intake

[for air intake duct only]

○Use the side fresh air intake hole, or supply through a part of the suction duct.

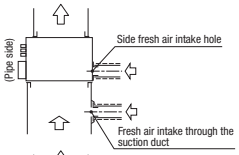

[for simultaneous air intake/vent]

○Intake air through the suction duct.
(the side cannot be used)

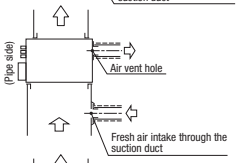

②Air Vent

○Use the side air vent hole.
(always use together with the air intake)

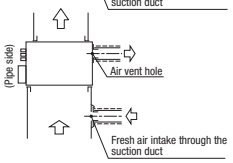

○Insulate the duct to protect it from dew condensation.

⑥Refrigerant pipe

Caution

●Use the new refrigerant pipe.
When re-using the existing pipe system for R22 or R407C, pay attention to the following items.
・Change the flare nuts with the attached ones (JIS category 2), and reprocess the flare parts.
・Do not use thin-walled pipes.

●Use phosphorus deoxidized copper alloy seamless pipe (C1220T specified in JIS H3300) for refrigeration pipe installation.
In addition, make sure there is no damage both inside and outside of the pipe, and no harmful substances such as sulfur, oxide, dust or a contaminant stuck on the pipes.

●Do not use any refrigerant other than R410A.
Using other refrigerant except R410A (R22 etc.) may degrade inside refrigeration oil. And air getting into refrigeration circuit may cause over-pressure and resultant it may result in bursting, etc.

●Store the copper pipes indoors and seal the both end of them until they are brazed in order to avoid any dust, dirt or water getting into pipe. Otherwise it will cause degradation of refrigeration oil and compressor breakdown, etc.

●Use special tools for R410 refrigerant.

Piping work

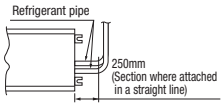

When conducting piping work, make sure to allow the pipes to be aligned in a straight line for at least 250 mm, as shown in the left illustration. (This is necessary for the drain pump to function)

Work procedure

1. Remove the flare nut and blind flanges on the pipe of the indoor unit.
   ※ Make sure to loosen the flare nut with holding the nut on pipe side with a spanner and giving torque to the nut with another spanner in order to avoid unexpected stress to the copper pipe, and then remove them. (Gas may come out at this time, but it is not abnormal.)
   ● Pay attention whether the flare nut pops out. (as the indoor unit is sometimes pressured.)
2. Make a flare on liquid pipe and gas pipe, and connect the refrigeration pipes on the indoor unit.
   ※Bend the pipe with as big radius as possible and do not bend the pipe repeatedly. In addition, do not twist and crush the pipes.
   ※Do a flare connection as follows:
   ● Make sure to loosen the flare nut with holding the nut on pipe side with a spanner and giving torque to the nut with another spanner in order to avoid unexpected stress to the copper pipe, and then remove them.
   ● When fastening the flare nut, align the refrigeration pipe with the center of flare nut, screw the nut for 3-4 times by hand and then tighten it by spanner with the specified torque mentioned in the table below. Make sure to hold the pipe on the indoor unit securely by a spanner when tightening the nut in order to avoid unexpected stress on the copper pipe.
3. Cover the flare connection part of the indoor unit with attached insulation material after a gas leakage inspection, and tighten both ends with attached straps.
   ●Make sure to insulate both gas pipes and liquid pipes completely.
   ※Incomplete insulation may cause dew condensation or water dropping.
4. Refrigerant is charged in the outdoor unit.
   As for the additional refrigerant charge for the indoor unit and piping, refer to the installation manual attached to the outdoor unit.

Pipe diameter	Tightening torque N·m
ϕ 6.35	14 to 18
ϕ 9.52	34 to 42
ϕ 12.7	49 to 61
ϕ 15.88	68 to 82
ϕ 19.05	100 to 120

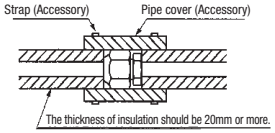

⑦Drain pipe

Caution

- Install the drain pipe according to the installation manual in order to drain properly. Imperfection in draining may cause flood indoors and wetting the household goods, etc.
- Do not put the drain pipe directly into the ditch where toxic gas such as sulfur, the other harmful and inflammable gas is generated. Toxic gas would flow into the room and it would cause serious damage to user's health and safety (some poisoning or deficiency of oxygen). In addition, it may cause corrosion of heat exchanger and bad smell.
- Connect the pipe securely to avoid water leakage from the joint.
- Insulate the pipe properly to avoid condensation drop.
- Check if the water can flow out properly from both the drain outlet on the indoor unit and the end of the drain pipe after installation.
- Make sure to make descending slope of greater than 1/100 and do not make up-down bend and/or trap in the midway. In addition, do not put air vent on the drain pipe. Check if water is drained out properly from the pipe during commissioning. Also, keep sufficient space for inspection and maintenance.

Work procedure

1. Make sure to insert the drain hose (the end mode of soft PVC) to the end of the step part of drain socket.
   Attach the hose clamp to the drain hose around 10mm from the end, and fasten the screw within 5mm left to the nut.
   - Do not apply adhesives on this end.
   - Do not use acetone-based adhesives to connect to the drain socket.

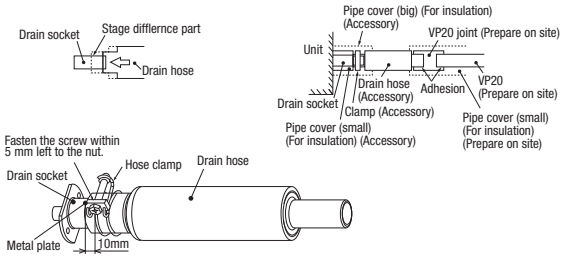

2. Prepare a joint for connecting VP-20 pipe, adhere and connect the joint to the drain hose (the end made of rigid PVC), and adhere and connect VP-20 pipe (prepare on site).
   ※As for drain pipe, apply VP-20 made of rigid PVC which is on the market.
   - Make sure that the adhesive will not get into the supplied drain hose. It may cause the flexible part broken after the adhesive is dried up and gets rigid.
   - The flexible drain hose is intended to absorb a small difference at installation of the unit or drain pipes. Intentional bending, expanding may cause the flexible hose broken and water leakage.

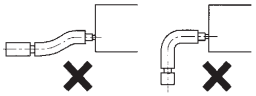

3. Make sure to make descending slope of greater than 1/100 and do not make up-down bend and/or trap in the midway.
   - Pay attention not to give stress on the pipe on the indoor unit side, and support and fix the pipe as close place to the unit as possible when connecting the drain pipe.
   - Do not set up air vent.

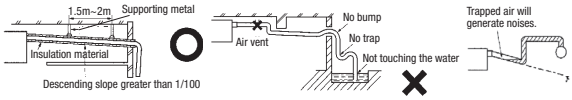

- When sharing a drain pipe for more than one unit, lay the main pipe 100mm below the drain outlet of the unit. In addition, select VP-30 or bigger size for main drain pipe.

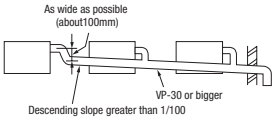

4. Insulate the drain pipe.
   - Be sure to insulate the drain socket and rigid PVC pipe installed indoors otherwise it may cause dew condensation and water leakage.
     ※After drainage test implementation, cover the drain socket part with pipe cover (small size), then use the pipe cover (big size) to cover the pipe cover (small size), clamps and part of the drain hose, and fix and wrap it with tapes to wrap and make joint part gapless.

⑦Drain pipe (continued)

Drain up

- The position for drain pipe outlet can be raised up to 600mm above the ceiling. Use elbows for installation to avoid obstacles inside ceiling. If the horizontal drain pipe is too long before vertical pipe, the backflow of water will increase when the unit is stopped, and it may cause overflow of water from the drain pan on the indoor unit. In order to avoid overflow, keep the horizontal pipe length and offset of the pipe within the limit shown in the figure below.

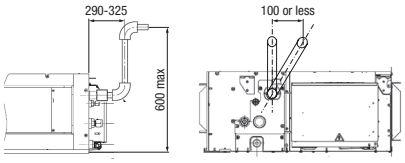

Otherwise, the construction point makes it same as drain pipe construction.

Drain test

1. Conduct a drain test after completion of the electrical work.
2. During the trail, make sure that drain flows properly through the piping and that no water leaks from connections.
3. In case of a new building, conduct the test before it is furnished with the ceiling.
4. Be sure to conduct this test even when the unit is installed in the heating season.

Procedures

1. Supply about 1000 cc of water to the unit through the air outlet by using a feed water pump.
2. Check the drain while cooling operation.

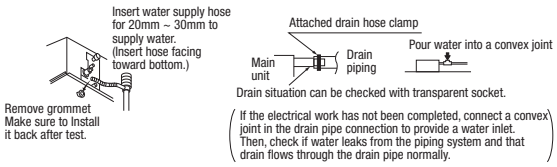

Outline of bottom drain piping work

- If the bottom drain piping can be done with a descending gradient (1/50-1/100), it is possible to connect the pipes as shown in the drawing below.

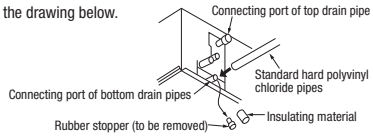

Uncoupling the drain motor connector

- Uncouple the connector CNR for the drain motor as illustrated in the drawing on the right.

(Note: If the unit is run with the connector coupled, drain water will be discharged from the upper drain pipe joint, causing a water leak.)

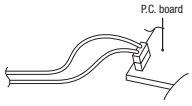

⑧Wiring-out position and wiring connection

- Electrical installation work must be performed according to the installation manual by an electrical installation service provider qualified by a power provider of the country, and be executed according to the technical standards and other regulations applicable to electrical installation in the country.
  Be sure to use an exclusive circuit.
- Use specified cord, fasten the wiring to the terminal securely, and hold the cord securely in order not to apply unexpected stress on the terminal.
- Do not put both power source line and signal line on the same route. It may cause miscommunication and malfunction.
- For the details of electrical wiring work, see attached instruction manual for electrical wiring work.

1. Remove a lid of the control box (2 screws).
2. Hold each wiring inside the unit and fasten them to terminal block securely.
3. Fix the wiring with clamps.
4. Install the removed parts back to original place.

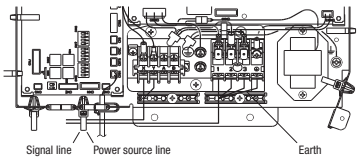

Single unit wiring connection

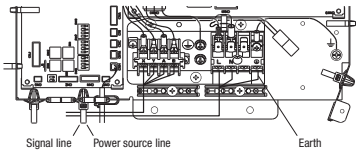

Multi unit wiring connection

⑨External static pressure setting

You can set External Static Pressure (E.S.P.) by either method of MANUAL SETTING or AUTOMATIC SETTING by remote controller.
Indoor unit will control fan-speed to keep rated air flow volume at each fan speed setting (Lo-Uhi)

1. MANUAL SETTING
   You can set required E.S.P. by wired remote controller that calculated with the set air flow rate and pressure loss of the duct connected.
   Select No.1-10 (10Pa-100Pa) from following table according to calculation result.
   Refer to technical manual for details of air flow characteristic.

Setting No.	1	2	3	4	5	6	7	8	9	10
External Static Pressure (Pa)	10	20	30	40	50	60	70	80	90	100

※ When you set No.11-19 by remote controller, unit will control fan-speed with setting of No.10 Factory default is at No.5.

- How to set E.S.P by wired remote controller
  ① Push "◆" marked button(E.S.P button).
  ② Select indoor unit No. by using ⬍ button.
  ③ Select setting No. by using ⬍ button and set E.S.P. by button.
  See detailed procedure in technical manual.

Notice
You can NOT set E.S.P by wireless remote controller.

Caution
Be sure to set E.S.P. according to actual duct connected.
Wrong settings causes excessive air flow volume or water drop blown out.

2. AUTOMATIC SETTING
   Indoor unit will recognize E.S.P. by itself automatically and select appropriate fan speed No.1-10.

- How to start automatic setting
  ①, ②Same setting as MANUAL SETTING.
  ③ Select [AUT] by using ⬍ button and press button.
  ② After setting E.S.P. at "AUT", operate unit in FAN mode with certain fan speed (Lo-Uhi).

⑨External static pressure setting (continued)

Indoor unit fan will run automatically and recognize E.S.P. by itself.
The operation for automatic E.S.P recognition will last about 6 minutes, and it will be stopped after recognition is completed.

Caution
- Be sure to execute AUTOMATIC SETTING by remote controller AFTER ducting work is completed. When duct specification is changed after AUTOMATIC SETTING, be sure to execute AUTOMATIC SETTING again after power resetting and turning on again.
- Be sure to execute AUTOMATIC SETTING before trial cooling operation.
  (See ELECTRICAL WIRING WORK INSTRUCTION about trial cooling operation)
- Before AUTOMATIC SETTING, be sure to check that return air filter in duct is installed and damper is opened.
  Wrong procedure causes excessive air flow or water drop blown out.

Notice
- During operation for automatic recognition (the Auto Operation), fan rotates with certain speeds regardless of set fan speed by remote controller.
- When duct is set with low static pressure (around 10-50Pa), even if indoor unit operate with higher air flow volume than rated one, but it is not abnormal.
- When you changed operation mode or stop operation with ON/OFF button during Auto Operation, the Auto operation will be canceled.
- In such case, be sure to execute AUTOMATIC SETTING again according to above procedure.

⑩Check list after installation

- Check the following items after all installation work completed.

Check if	Expected trouble	Check
The indoor and outdoor units are fixed securely?	Falling, vibration, noise	
Inspection for leakage is done?	Insufficient capacity	
Insulation work is properly done?	Water leakage	
Water is drained properly?	Water leakage	
Supply voltage is same as mentioned in the model name plate?	PCB burnt out, not working at all	
No mis-wiring or mis-connection of piping?	PCB burnt out, not working at all	
Earth wiring is connected properly?	Electric shock	
Cable size comply with specified size?	PCB burnt out, not working at all	
Any obstacle blocks airflow on air inlet and outlet?	Insufficient capacity	
Is setting of E.S.P finished?	Excessive air flow, water drop blow out	

(2) Replacement procedure of the fan unit

Notes(1) The unit is a heavy item. It must be supported securely and handled with care not to drop when it is necessary to replace.
(2) For the maintenance space, refer to page 25.

(a) Models FDUM22, 28, 36, 45, 56KXE6F

1) Remove the control box and the side panel, and remove the screws marked in the circles (2 places) in the figure.

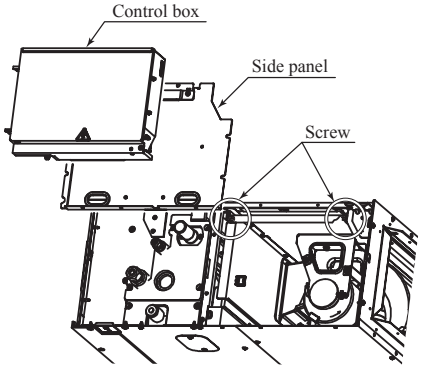

2) Take out the fan unit in the arrow direction.

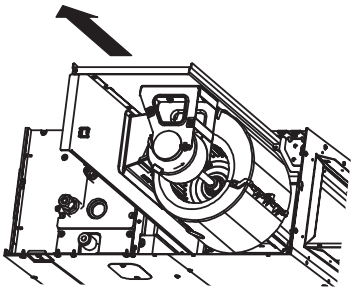

(b) Models FDUM71, 90KXE6F

1) Remove the control box and the side panel, and remove the screws marked in the circles (2 places) in the figure.

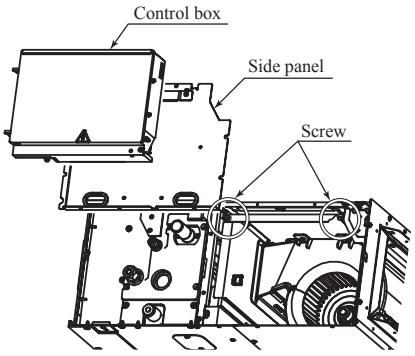

2) Take out the fan unit in the arrow direction.

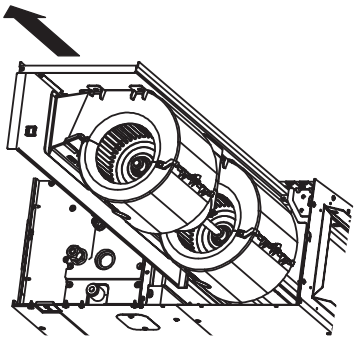

(c) Models FDUM112, 140, 160KXE6F

1) Remove the control box and the side panel, and remove the screws marked in the circles (2 places) from the unit located at the near side.

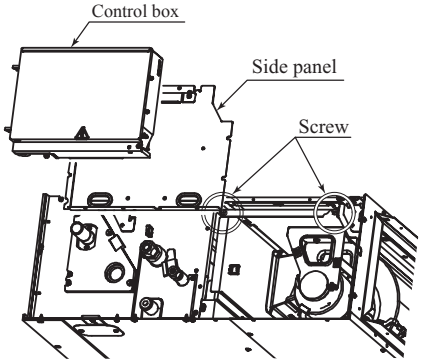

2) Take out the fan unit located at the near side in the arrow direction.

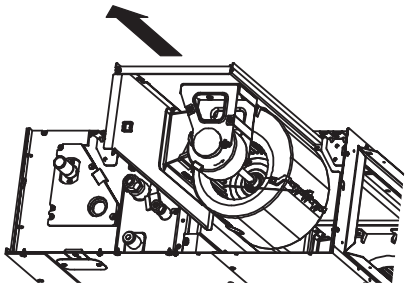

3) Remove the screws marked in the circles (2 places) from the fan unit located at the far side.

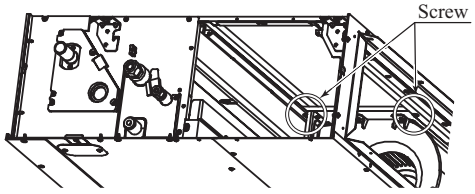

4) Take out the fan unit in the arrow direction.

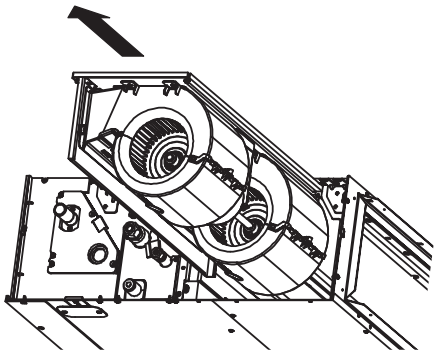

7.2 Electrlc wiring work instruction

PSC012D002

Electrical wiring work must be performed by an electrician qualified by a local power provider according to the electrical installation technical standards and interior wiring regulations applicable to the installation site.

Security instructions

- **Read the "SAFETY PRECAUTIONS" carefully first of all and then strictly follow it during the installation work in order to protect yourself.**
- **The precautionary items mentioned below are distinguished into two levels, ⚠WARNING and ⚠CAUTION .**
  ⚠WARNING **: Wrong installation would cause serious consequences such as injuries or death.**
  ⚠CAUTION **: Wrong installation might cause serious consequences depending on circumstances.**
  Both mentions the important items to protect your health and safety so strictly follow them by any means.
- **The meanings of "Marks" used here are as shown on the right:**
  ⃠ Never do it under any circumstances. ❶❹ Always do it according to the instruction.
- **Accord with following items. Otherwise, there will be the risks of electric shock and fire caused by overheating or short circuit.**

⚠ WARNING

- **Be sure to have the electrical wiring work done by qualified electrical installer, and use exclusive circuit.**
  Power source with insufficient capacity and improper work can cause electric shock and fire.
- **Use specified wire for electrical wiring, fasten the wiring to the terminal securely, and hold the cable securely in order not to apply unexpected stress on the terminal.**
  Loose connections or hold could result in abnormal heat generation or fire.
- **Arrange the electrical wires in the control box properly to prevent them from rising. Fit the lid of the services panel property.**
  Improper fitting may cause abnormal heat and fire.
- **Use the genuine optional parts. And installation should be performed by a specialist.**
  If you install the unit by yourself, it could cause water leakage, electric shock and fire.
- **Do not repair by yourself. And consult with the dealer about repair.**
  Improper repair may cause water leakage, electric shock or fire.
- **Consult the dealer or a specialist about removal of the air conditioner.**
  Improper installation may cause water leakage, electric shock or fire.
- **Turn off the power source during servicing or inspection work.**
  If the power is supplied during servicing or inspection work, it could cause electric shock and injury by the operating fan.
- **Shut off the power before electrical wiring work.**
  It could cause electric shock, unit failure and improper running.

⚠ CAUTION

- **Perform earth wiring surely.**
  Do not connect the earth wiring to the gas pipe, water pipe, lightning rod and telephone earth wiring. Improper earth could cause unit failure and electric shock or fire due to a short circuit.
- **Earth leakage breaker must be installed.**
  If the earth leakage breaker is not installed, it could cause electric shocks or fire.
- **Make sure to install earth leakage breaker on power source line. (countermeasure thing to high harmonics.)**
  Absence of breaker could cause electric shock.
- **Use the circuit breaker of correct capacity. Circuit breaker should be the one that disconnect all poles under over current.**
  Using the incorrect one could cause the system failure and fire.
- **Do not use any materials other than a fuse of correct capacity where a fuse should be used.**
  Connecting the circuit by wire or copper wire could cause unit failure and fire.
- **Use power source line of correct capacity.**
  Using incorrect capacity one could cause electric leak, abnormal heat generation and fire.
- **Do not mingle solid cord and stranded cord on power source and signal side terminal block.**
  In addition, do not mingle difference capacity solid or stranded cord.
  Inappropriate cord setting could cause loosing screw on terminal block, bad electrical contact, smoke and fire.
- **Do not turn off the power source immediately after stopping the operation.**
  Be sure to wait for more than 5 minutes. Otherwise it could cause water leakage or breakdown.
- **Do not control the operation with the circuit breaker.**
  It could cause fire or water leakage. In addition, the fan may start operation unexpectedly and it may cause injury.

① Electrical Wiring Connection

- Install an over-current and earth leakage breaker (threshold current: 30mA) specified for each unit without fail.
- Provide a dedicated branching circuit and never share a branching circuit with other equipment. If shared, disconnection at the circuit breaker may occur, which can cause secondary damage.
- Set earth of D-type.
- Connection of a cable beyond 3.5 mm² is not permitted. When cables of over 5.5 mm² are in use, provide a dedicated pull box to take a branch to an indoor unit.
- Keep "remote controller line" and "power source line" away from each other on constructing of unit outside.
- Run the lines (power source, remote controller and "between indoor and outdoor unit") upper ceiling through iron pipe or other tube protection to avoid the damage by mouse and so on.
- Do not add cord in the middle of line (of indoor power source, remote controller and signal) route on outside of unit. If connecting point is flooded, it could cause problem as for electric or communication.
  (In the case that it is necessary to set connecting point on the signal line way, perform thorough waterproof measurement.)
- Do not connect the power source line [220V/240V/380V/415V] to signal side terminal block. Otherwise, it could cause failure.
- Screw the line to terminal block without any looseness, certainly.
- Do not turn on the switch of power source, before all of line work is done.

① Electrical Wiring Connection (continued)

- **Electrical wiring work must be performed by an electlician an qualified by a local power provider. These wiring specifications are determined on the assumption that the following instructions are observed:**
  ① Do not use cords other than copper ones.
  Do not use any supply line lighter than one specified in parentheses for each type below.
  – braided cord (code designation 60245 IEC 51), if allowed in the relevant part 2;
  – ordinary tough rubber sheathed cord (code designation 60245 IEC 53);
  – flat twin tinsel cord (code designation 60227 IEC 41);
  – ordinary polyvinyl chloride sheathed cord (code designation 60227 IEC 53);
  ② Provide a separate power outlet for each outdoor or indoor unit.
  ③ All indoor units grouped in one system must have power source that can be turned on or off simultaneously.
  ④ Pay extra attention so as not to confuse signal line and power source line connection, because an error in their connection can be burn all the boards at once.
- **Connection of the line ("Between indoor and outdoor unit", Earth and Remote controller)**
  ① Remove lid of control box before connect the above lines, and connect the lines to terminal block according to number pointed on label of terminal block.
  In addition, pay enough attention to confirm the number to lines, because there is electrical polarity except earth line. Furthermore, connect earth line to earth position of terminal block of power source.
  ② Install earth leakage breaker on power source line. In addition, select the type of breaker for inverter circuit as earth leakage breaker.
  ③ If the function of selected earth leakage breaker is only for earth-fault protection, hand switch (switch itself and type "B" fuse) or circuit breaker is required in series with the earth leakage breaker.
  ④ Install isolator or disconnect switch on the power supply wiring in accordance with the local codes and regulations. The isolator should be set in the box with key to prevent touching by another person when servicing.

Cabling system diagram (Outdoor/indoor unit connection procedure)

Specification of each line

Power source line	2.0~3.5mm²
Signal line (Shielded cord)	0.75~1.25mm²
Remote controller line	0.3~2.0mm²

Use shielded cord for a signal line and connect "earth (signal line)" at all the indoor units and outdoor units.

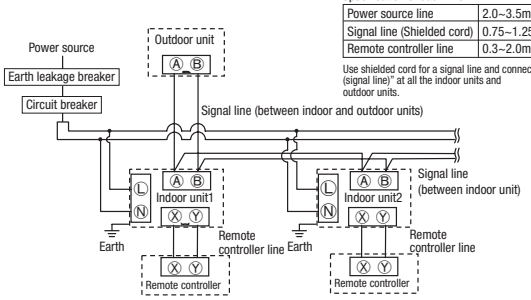

Power source line specification

Wiring specification

Unit type	Earth leakage breaker			Circuit breaker		Wiring size				
				Switch breaker	Over-current protector rated capacity	Power source line	Wire length	Signal line	Remote controller line	Earth line
22-36	15A	30mA	0.1sec	30A	15A	2.0mm² ×2	304m	0.75~ 1.25mm²×2	0.3mm² ×2cores	2.0mm²
45-90							216m			
112-160							129m			
In case of Duct connected -High static pressure- type										
71-140	15A	30mA	0.1sec	30A	15A	2.0mm² ×2	87m	0.75~ 1.25mm²×2	0.3mm² ×2cores	2.0mm²
224,280							48m			

Note (1) The cord distances are calculated with a voltage drop of 2%. If the distance should exceed the above data, review the cord thickness to use in accordance with your extension cord regulations.
(2) When total extension of remote controller line is more than 100m, change the size of cord according to "③ Remote Control, Wiring and functions".

In case of Heat recovery 3-pipe systems

Branching controller of heat recovery 3-pipe systems wiring

- When this unit is used as a "Heat Recovery 3-pipe Systems", refer to the installation manual of a branching controller (option).

② Address setting

Address setting is done by (1) Manual address setting or (2) Automatic address setting.
In the case of (2) "Automatic address setting", it is possible to change address setting by wired remote controller after once complete setting.
As for details of setting procedure, refer to instructions attached to the outdoor unit for details.

③ Remote Control, Wiring and functions

- Do not install it on the following places.

(1) Place exposed to direct sunlight
(2) Places near heat devices
(3) High humidity places
(4) Hot surface or cold surface enough to generate condensation
(5) Place exposed to oil mist or steam directly.
(6) Uneven surface

Installation and wiring of remote controller

① Install remote controller referring to the attached manual.
② Wiring of remote controller should use 0.3mm² x2 core wires or cables.
The insulation thickness is 1mm or more. (on-site configuration)
③ Maximum prolongation of remote control wiring is 600 m.
If the prolongation is over 100m, change to the size below.
But, wiring in the remote controller case should be under 0.5mm². Change the wire size outside of the case according to wire connecting. Waterproof treatment is necessary at the wire connecting section. Be careful about contact failure.
100-200m .....0.5mm²×2 core
Under 300m.....0.75mm² × 2 core
Under 400m.....1.25mm² × 2 core
Under 500m.....2.0mm² × 2 core
④ Avoid using multi-core cables to prevent malfunction.
⑤ Keep remote controller line away from earth (frame or any metal of building).
⑥ Make sure to connect remote controller line to the remote controller and terminal block of indoor unit. (No polarity)

③ Remote Control, Wiring and functions (continued)

Control plural indoor units by a single remote controller

① A remote controller can control plural indoor units (up to 16)
In above setting, all plural indoor units will operate under same mode and temperature setting.
② Connect all indoor units with 2 core remote controller line for group control.
③ Use the function of manual address setting to set the indoor and outdoor address number.
○Do not forget to set the number for the outdoor units.
④ As shown in the following figure, the remote control can be used to control multiple outdoor units.
⑤ One remote control is able to perform group control for multiple units (maximum 16 units).
○Use the rotary SW1 and SW2 provided on the indoor unit PCB (Printed circuit board) to set unique remote control communication address avoiding duplication.

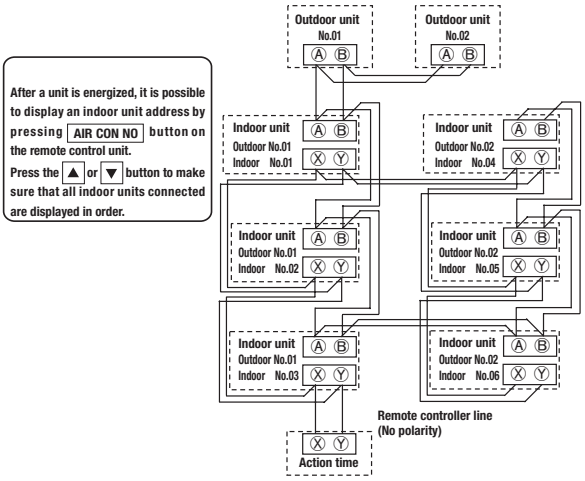

Confirming method of indoor units

When indoor unit address number is displayed on remote controller, pushing the (MODE) button to make the indoor unit with that number blow air (Display example:" I/U001 ≋ ").
Push the (MODE) button again to stop the operation.
However, this operation is invalid on the air-conditioning running.

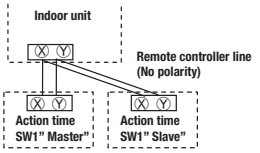

Switch	Setting	Contents
Wired remote controller: SW1 Wireless kit: SW1-2	Master	Master remote controller
	Slave	Slave remote controller

Master/slave setting when more than one remote control unit are used

A maximum of two remote control units can be connected to one indoor unit (or one group of indoor units.)
Latest "function setting" is superior than previous one.
Acceptable combination is "two (2) wired remote controllers", "one (1) wired remote controller and one (1) wireless kit" or "two (2) wireless kits".
Set SW1 to "Slave" for the slave remote control unit. It was factory set to "Master" for shipment.
Note:The setting "Remote control unit sensor enabled" is only selectable with the master remote control unit in the position where you want to check room temperature.

④ Trial operation

The method of trial cooling operation

Operate the remote control unit as follows.
1. Starting a cooling test run.
①Start the system by pressing the ON/OFF button.
②Select " ❄ (Cool)" with the (MODE) button.
③Press the TEST button for 3 seconds or longer.
The screen display will switch to: " ❄ TEST RUN ▼ "
④When the (SET) button is pressed while " ❄ TEST RUN ▼ " is indicated, a cooling test run will start.
The screen display will switch to " ❄ TEST RUN ".
2. Ending a cooling test run.
Pressing the ON/OFF button, the (TEMP) button or (MODE) button will end a cooling test run. (Cooling test run will end after 30 minutes pass.)
" ❄ TEST RUN " shown on the screen will go off.

④ Trial operation (continued)

Checking operation data

Operation data can be checked with remote control unit operation.
1. Press the CHECK button.
The display change " OPER DATA ▼ "
2. Press the (SET) button while " OPER DATA ▼ " is displayed.
3. When only one indoor unit is connected to remote controller, " DATA LOADING " is displayed (blinking indication during data loading).
Next, operation data of the indoor unit will be displayed. Skip to step 7.
4. When plural indoor units is connected, the smallest address number of indoor unit among all connected indoor unit is displayed.
[Example]:
" ☝⇕ SELECT I/U " (blinking 1 seconds) → " I/U000 ♟ " blinking.
5. Select the indoor unit number you would like to have data displayed with the ▲ ▼ button.
6. Determine the indoor unit number with the (SET) button.
(The indoor unit number changes from blinking indication to continuous indication)
" I/U000 " (The address of selected indoor unit is blinking for 2 seconds.)
↓
" DATA LOADING " (A blinking indication appears while data loaded.)
Next, the operation data of the indoor unit is indicated.
7. Upon operation of the ▲ ▼ button, the current operation data is displayed in order from data number 01.
The items displayed are in the following table.
※Depending on models, the items that do not have corresponding data are not displayed.
8. To display the data of a different indoor unit, press the AIR CON NO. button, which allows you to go back to the indoor unit selection screen.
9. Pressing the ON/OFF button will stop displaying data.
Pressing the (RESET) button during remote control unit operation will undo your last operation and allow you to go back to the previous screen.
◎If two (2) remote controllers are connected to one (1) inside unit, only the master controller is available for trial operation and confirmation of operation data. (The slave remote controller is not available.)

Number		Data Item
01	❄	(Operation Mode)
02	SET TEMP ___℃	(Set Temperature)
03	RETURN AIR ___℃	(Return Air Temperature)
04	SENSOR ___℃	(Remote Controller Thermistor Temperature)
05	THI-R1 ___℃	(Indoor Unit Heat Exchanger Thermistor / U Bend)
06	THI-R2 ___℃	(Indoor Unit Heat Exchanger Thermistor /Capillary)
07	THI-R3 ___℃	(Indoor Unit Heat Exchanger Thermistor /Gas Header)
08	I/U FANSPEED ___	(Indoor Unit Fan Speed)
09	DEMAND ___Hz	(Frequency Requirements)
10	ANSWER ___Hz	(Response Frequency)
11	I/U EEV ____P	(Pulse of Indoor Unit Expansion Valve)
12	TOTAL I/U RUN ___H	(Total Running Hours of The Indoor Unit)
21	OUTDOOR ___℃	(Outdoor Air Temperature)
22	THO-R1 ___℃	(Outdoor Unit Heat Exchanger Thermistor)
23	THO-R2 ___℃	(Outdoor Unit Heat Exchanger Thermistor)
24	COMP ___Hz	(Compressor Frequency)
25	HP ___MPa	(High Pressure)
26	LP ___MPa	(Low Pressure)
27	Td ___℃	(Discharge Pipe Temperature)
28	COMP BOTTOM ___℃	(Comp Bottom Temperature)
29	CT ___AMP	(Current)
30	TARGET SH ___℃	(Target Super Heat)
31	SH ___℃	(Super Heat)
32	TDSH ___℃	(Discharge Pipe Super Heat)
33	PROTECTION No.__	(Protection State No. of The Compressor)
34	O/U FANSPEED ___	(Outdoor Unit Fan Speed)
35	63H1	(63H1 On/Off)
36	DEFROST	(Defrost Control On/Off)
37	TOTAL COMP RUN ___H	(Total Running Hours of The Compressor)
38	O/U EEV1 ____P	(Pulse of The Outdoor Unit Expansion Valve EEVC)
39	O/U EEV2 ____P	(Pulse of The Outdoor Unit Expansion Valve EEVH)

※Depending on outdoor unit model, there are data not shown.

Trail operation of drain pump

Drain pump operation from remote control unit is possible. Operate a remote control unit by following the steps described below.
1. To start a forced drain pump operation.
①Press the TEST button for three seconds or longer.
The display will change " ❄ TEST RUN ▼ "
②Press the ▼ button once and cause " DRAIN PUMP ⇕ " to be displayed.
③When the (SET) button is pressed, a drain pump operation will start.
Display: " ☝ TO STOP "
2. To cancel a drain pump operation.
①If either (SET) or ON/OFF button is pressed, a forced drain pump operation will stop. The air conditioning system will become OFF.

◎If two (2) remote controllers are connected to one (1) inside unit, only the master controller is available for trial operation and confirmation of operation data. (The slave remote controller is not available.)

⑤ Function Setting by Remote Controller

Refer to page 36.

⑥ Control mode switching

●The control content of indoor units can be switched in following way. (▭ is the default setting)

Switch No.	control content	
SW1	Indoor unit address (tens place)	
SW2	Indoor unit address (ones place)	
SW3	Outdoor unit address (tens place)	
SW4	Outdoor unit address (ones place)	
SW5－1	ON	Fixed previous version of Super Link protocol
	OFF	Automatic adjustment of Super Link protocol
SW5－2	Indoor unit address (hundreds place)	
SW6－1 ~ 4	Model capacity setting	
SW7－1	ON	Operation check, Drain motor test run
	OFF	Normal operation

⑦ Function of CNT connector of indoor printed circuit board

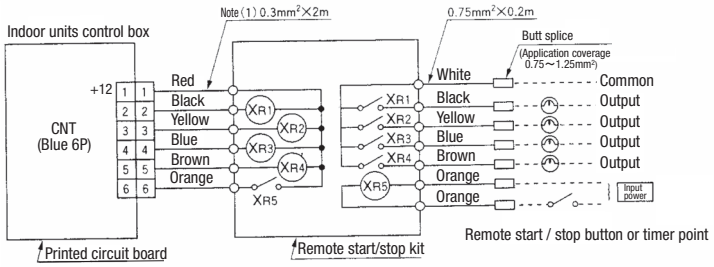

Note (1): Do not use the length over 2 meter

●CNT connector (local) vendor model
Connector : Made by molex 5264-06
Terminals : Made by molex 5263 T

●Function

Output 1:	Operation output (there is output when unit is in operation.)		
Output 2:	Heating output (there is output when operation MODE is HEATING.)		
Output 3:	Thermo ON output		
Output 4:	Inspection output (there is out put when unit is stopped by error.)		
Input 5:	Factory set	X_{R5} OFF ⇒ ON	UNIT ON
		X_{R5} ON ⇒ OFF	UNIT OFF
	Local set	X_{R5} OFF ⇔ ON	Receiving pulse signal, "ON/OFF" is reversed.

Refer to instruction manuals of "Branching controller", when the indoor unit is connected to "Heat recovery 3-pipe systems".

⑧Troubleshooting

The operation data is saved when the situation of abnormal operation happen, and the data can be confirmed by remote controller.

[Operating procedure]

1. Press the CHECK button.
   The display change " OPER DATA ▼ "
2. Once, press the ▼ button, and the display change " ERROR DATA ▲ ".
3. Press the ○ (SET) button and abnormal operation data mode is started.
4. When only one indoor unit is connected to remote controller, following is displayed.
   ①The case that there is history of abnormal operation.
   →Error code and " DATA LOADING " is displayed.
   [Example]: [E8] (ERROR CODE)
   " DATA LOADING " is displayed (blinking indication during data loading).
   Next, the abnormal operation data of the indoor unit will be displayed.
   Skip to step 7.
   ②The case that there is not history of abnormal operation.
   →" NO ERROR " is displayed for 3 seconds and this mode is closed.
5. When plural indoor units is connected, following is displayed.
   ①The case that there is history of abnormal operation.
   →Error code and the smallest address number of indoor unit among all connected indoor unit is displayed.
   [Example]: [E8] (ERROR CODE)
   " I/U000 ▲ " blinking
   ②The case that there is not history of abnormal operation.
   →Only address number is displayed.
6. Select the indoor unit number you would like to have data displayed with the ▲ ▼ button.
7. Determine the indoor unit number with the ○ (SET) button.
   [Example]: [E8] (ERROR CODE)
   " I/U000 ▲ " (The address of selected indoor unit is blinking for 2 seconds.)
   ↓
   [E8] " DATA LOADING " (A blinking indication appears while data loaded.)
   Next, the abnormal operation data is indicated.
   If the indoor unit doing normal operation is selected, " NO ERROR " is displayed for 3 seconds and address of indoor unit is displayed.
8. By the ▲ ▼ button, the abnormal operation data is displayed.
   Displayed data item is based on ④ Trial operation .
   ※Depending on models, the items that do not have corresponding data are not displayed.
9. To display the data of a different indoor unit, press the AIR CON No. button, which allows you to go back to the indoor unit slection screen.
10. Pressing the ⏻ON/OFF button will stop displaying data.

Pressing the ⊘ (RESET) button during remote control unit operation will undo your last operation and allow you to go back to the previous screen.

◎If two (2) remote controllers are connected to one (1) inside unit, only the master controller is available for trial operation and confirmation of operation data. (The slave remote controller is not available.)

Error code of indoor unit

Display on remote controller	LED on indoor circuit board red (checking)	green (normal)	Content
Off	Off	Continuous blinking	Normal
	Off	Off	Fault on power, indoor power off or lack phase
E1	Off	Continuous blinking	Fault on the transmission between indoor circuit board and remote control
	Not sure	Not sure	Indoor computer abnormal
E2	blinking once	Continuous blinking	Duplication of indoor address No. (can only be detected during operation) Excess number of remote controllers (can only be detected during operation)
E3	blinking twice	Continuous blinking	Outdoor power off or lack phase There is no corresponding outdoor unit address.
E5	blinking twice	Continuous blinking	Fault on outdoor-indoor transmission
E6	blinking once	Continuous blinking	Indoor heat exchange sensor interrupted or short-circuit
E7	blinking once	Continuous blinking	Indoor air inhaling sensor broken or short-circuit
E9	blinking once	Continuous blinking	Float SW actions (only with FS)
	blinking twice	Continuous blinking	Drain pump over current
E10	Off	Continuous blinking	Excess number of remote controller connections
E11	Off	Continuous blinking	The master indoor unit is not set properly.
E12	blinking once	Continuous blinking	Super link: Indoor unit address SW Indoor No. / Outdoor No. New specification: 001～127 / 49 Old specification: 0～47 / 48，49 48，49 / 0～47
E16	blinking once	Continuous blinking	Fan motor (1) abnormal
	blinking twice	Continuous blinking	Fan motor (2) abnormal
E18	blinking once	Continuous blinking	The address configuration fault for master-slave indoor units.
E19	blinking once	Continuous blinking	Configuration fault on running checking model
E20	blinking once	Continuous blinking	Fan motor (1) abnormal rotation
	blinking twice	Continuous blinking	Fan motor (2) abnormal rotation
E28	Off	Continuous blinking	Remote controller sensor interrupted
Over E30	Off	Continuous blinking	Outdoor unit checking (outdoor circuit board LED checking)
E63	Off	Continuous blinking	Emergency stop.

7.3 Installation of wired remote controller

PJA012D730

Read together with indoor unit's installation manual.

⚠WARNING

- Fasten the wiring to the terminal securely and hold the cable securely so as not to apply unexpected stress on the terminal.
  Loose connection or hold will cause abnormal heat generation or fire.
- Make sure the power supply is turned off when electric wiring work.
  Otherwise, electric shock, malfunction and improper running may occur.

⚠CAUTION

- DO NOT install the remote controller at the following places in order to avoid malfunction.
  (1) Places exposed to direct sunlight
  (2) Places near heat devices
  (3) High humidity places
  (4) Hot surface or cold surface enough to generate condensation
  (5) Places exposed to oil mist or steam directly
  (6) Uneven surface
- DO NOT leave the remote controller without the upper case.
  In case the upper cace needs to be detached, protect the remote controller with a packaging box or bag in order to keep it away from water and dust.

Accessories	Remote controller, wood screw (ø3.5×16) 2 pieces
Prepare on site	Remote controller cord (2 cores) the insulation thickness in 1mm or more. [In case of embedding cord] Erectrical box, M4 screw (2 pieces) [In case of exposing cord] Cord clamp (if needed)

Installation procedure

① Open the cover of remote controller , and remove the screw under the buttons without fail.

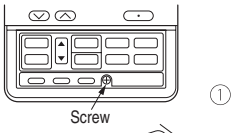

② Remove the upper case of remote controller.
Insert a flat-blade screwdriver into the dented part of the upper part of the remote controller, and wrench slightly.

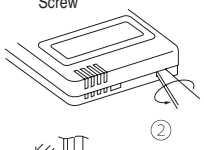

[In case of embedding cord]

③ Embed the erectrical box and remote controller cord beforehand.

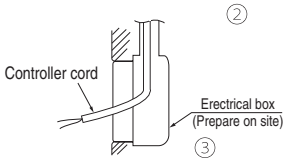

④ Prepare two M4 screws (recommended length is 12-16mm) on site, and install the lower case to erectrical box.
Choose either of the following two positions in fixing it with screws.

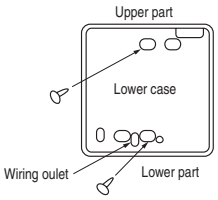

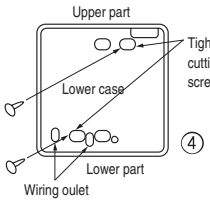

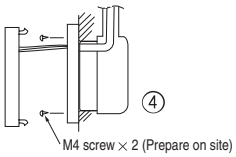

⑤ Connect the remote controller cord to the terminal block.
Connect the terminal of remote controller (X,Y) with the terminal of indoor unit (X,Y). (X and Y are no polarity)

⑥ Install the upper case as before so as not to catch up the remote controller cord, and tighten with the screws.

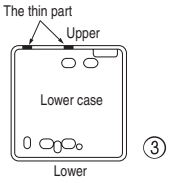

[In case of exposing cord]

③ You can pull out the remote controller cord from left upper part or center upper part.
Cut off the upper thin part of remote controller lower case with a nipper or knife, and grind burrs with a file etc.

④ Install the lower case to the flat wall with attached two wooden screws.

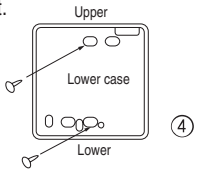

⑤ Connect the remote controller cord to the terminal block.
Connect the terminal of remote controller (X,Y) with the terminal of indoor unit (X,Y).
(X and Y are no polarity)
Wiring route is as shown in the right diagram depending on the pulling out direction.

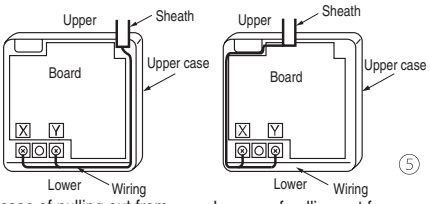

In case of pulling out from upper left
In case of pulling out from upper center

The wiring inside the remote controller case should be within 0.3mm^2 (recommended) to 0.5mm^2.
The sheath should be peeled off inside the remote controller case.
The peeling-off length of each wire is as below.

Pulling out from upper left	Pulling out from upper center
X wiring : 215mm Y wiring : 195mm	X wiring : 170mm Y wiring : 190mm

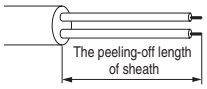

⑥ Install the upper case as before so as not to catch up the remote controller cord, and tighten with the screws.
⑦ In case of exposing cord, fix the cord on the wall with cord clamp so as not to slack.

Installation and wiring of remote controller

① Wiring of remote controller should use 0.3mm^2 × 2 core wires or cables. (on-site configuration)
② Maximum prolongation of remote controller wiring is 600 m.
If the prolongation is over 100m, change to the size below.
But, wiring in the remote controller case should be under 0.5mm^2 . Change the wire size outside of the case according to wire connecting. Waterproof treatment is necessary at the wire connecting section. Be careful about contact failure.
100 - 200m·····0.5mm^2 × 2 cores
Under 300m·····0.75mm^2 × 2 cores
Under 400m·····1.25mm^2 × 2 cores
Under 500m·····2.0mm^2 × 2 cores

Master/ slave setting when more than one remote controllers are used

A maximum of two remote controllers can be connected to one indoor unit (or one group of indoor units.)

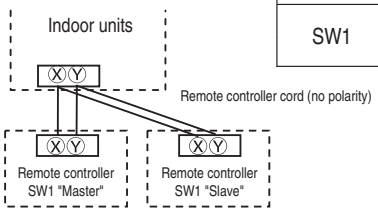

Switch	Setting	Contents
SW1	M	Master remote controller
	S	Slave remote controller

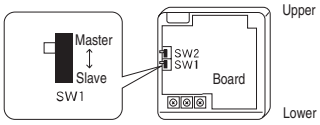

Set SW1 to "Slave" for the slave remote controller. It was factory set to "Master" for shipment.
Note: The setting "Remote controller thermistor enabled" is only selectable with the master remote controller in the position where you want to check room temperature.
The air conditioner operation follows the last operation of the remote controller regardless of the master/ slave setting of it.

The indication when power source is supplied

When power source is turned on, the following is displayed on the remote controller until the communication between the remote controller and indoor unit settled.
Master remote controller : "WAIT M"
Slave remote controller : "WAIT S"

At the same time, a mark or a number will be displayed for two seconds first.
This is the software's administration number of the remote controller, not an error cord.

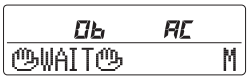

※ The left mark is only an example. Other marks may appear.

When remote controller cannot communicate with the indoor unit for half an hour, the below indication will appear.
Check wiring of the indoor unit and the outdoor unit etc.

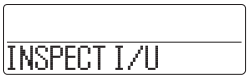

The range of temperature setting

When shipped, the range of set temperature differs depending on the operation mode as below.

Heating : 16~30˚C (55~86˚F)

Except heating (cooling, fan, dry, automatic) : 18~30˚C (62~86˚F)

●Upper limit and lower limit of set temperature can be changed with remote controller.

Upper limit setting: valid during heating operation. Possible to set in the range of 20 to 30˚C (68 to 86˚F).

Lower limit setting: valid except heating (automatic, cooling, fan, dry) Possible to set in the range of 18 to 26°C (62 to 79°F).

When you set upper and lower limit by this function, control as below.

1. When ⑫TEMP RANGE SET, remote controller function of function setting mode is "INDN CHANGE" (factory setting),

   【If upper limit value is set】

   During heating, you cannot set the value exceeding the upper limit.

   【If lower limit value is set 】

   During operation mode except heating, you cannot set the value below the lower limit.

2. When ⑫TEMP RANGE SET, remote controller function of function setting mode is "NO INDN CHANGE"

   【If upper limit value is set】

   During heating, even if the value exceeding the upper limit is set, upper limit value will be sent to the indoor unit. But, the indication is the same as the temperature set.

   【If lower limit value is set 】

   During except heating, even if the value lower than the lower limit is set, lower limit value will be sent to the indoor unit. But, the indication is the same as the temperature set.

●How to set upper and lower limit value

1. Stop the air-conditioner, and press (SET) and (MODE) button at the same time for over three seconds .

   The indication changes to "FUNCTION SET ▼".
2. Press ▼ button once, and change to the "TEMP RANGE ▲ " indication.
3. Press (SET) button, and enter the temperature range setting mode.
4. Select "UPPER LIMIT ▼" or "LOWER LIMIT ▲" by using ▲ ▼ button.
5. Press (SET) button to fix.
6. When "UPPER LIMIT ▼" is selected (valid during heating)

   ① Indication: " ∨ ∧ SET UP" → "UPPER 30˚C ∨"

   ② Select the upper limit value with temperature setting button ∨ ∧ . Indication example: "UPPER 26˚C ∨ ∧" (blinking)

   ③ Press (SET) button to fix. Indication example: "UPPER 26˚C" (Displayed for two seconds)

   After the fixed upper limit value displayed for two seconds, the indication will return to "UPPER LIMIT ▼".
7. When "LOWER LIMIT ▲" is selected (valid during cooling, dry, fan, automatic)

   ① Indication: " ∨ ∧ SET UP" → "LOWER 18˚C ∧"

   ② Select the lower limit value with temperature setting button ∨ ∧ . Indication example: "LOWER 24˚C ∨ ∧" (blinking)

   ③ Press (SET) button to fix. Indication for example: "LOWER 24˚C" (Displayed for two seconds)

   After the fixed lower limit value displayed for two seconds, the indication will return to "LOWER LIMIT ▼".
8. Press ON/OFF button to finish.

- It is possible to finish by pressing ON/OFF button on the way, but unfinished change of setting is unavailable.
- During setting, if you press (RESET) button, you return to the previous screen.

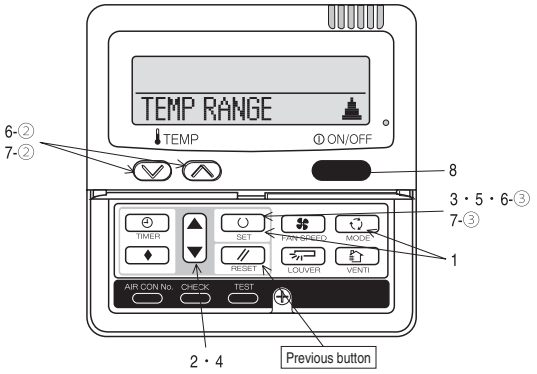

The functional setting

●The initial function setting for typical using is performed automatically by the indoor unit connected, when remote controller and indoor unit are connected.
As long as they are used in a typical manner, there wiil be no need to change the initial settings.
If you would like to change the initial setting marked "○", set your desired setting as for the selected item.
The procedure of functional setting is shown as the following diagram.

[Flow of function setting]

Start : Stop air-conditioner and press "○" (SET) and "⟲" (MODE) buttons at the same time for over three seconds.
Finalize : Press "○" (SET) button.
Reset : Press "⊘" (RESET) button.
Select : Press ▲ ▼ button.
End : Press ON/OFF button.
It is possible to finish above setting on the way, and unfinished change of setting is unavailable.
"○" : Initial settings
"※" : Automatic criterion

Record and keep the setting

Consult the technical data etc. for each control details

Stop air-conditioner and press ○ (SET) + ⟲ (MODE) buttons at the same time for over three seconds.

FUNCTION SET ▼

To next page

FUNCTION ▼ (Remote controller function)

Function	setting		
01 ESP SET			
	ESP VALID	○	Validate setting of ESP:External Static Pressure
	ESP INVALID		Invalidate setting of ESP
02 AUTO RUN SET			
	AUTO RUN ON	※	
	AUTO RUN OFF	※	Automatical operation is impossible
03 TEMP SW			
	VALID	○	
	INVALID		Temperature setting button is not working
04 MODE SW			
	VALID	○	
	INVALID		Mode button is not working
05 ON/OFF SW			
	VALID	○	
	INVALID		On/Off button is not working
06 FAN SPEED SW			
	VALID	※	
	INVALID	※	Fan speed button is not working
07 LOUVER SW			
	VALID	※	
	INVALID	※	Louver button is not working
08 TIMER SW			
	VALID	○	
	INVALID		Timer button is not working
09 SENSOR SET			
	SENSOR OFF	○	Remote thermistor is not working.
	SENSOR ON		Remote thermistor is working.
	SENSOR +3.0℃		Remote thermistor is working, and to be set for producing +3.0˚C increase in temperature.
	SENSOR +2.0℃		Remote thermistor is working, and to be set for producing +2.0˚C increase in temperature.
	SENSOR +1.0℃		Remote thermistor is working, and to be set for producing +1.0˚C increase in temperature.
	SENSOR -1.0℃		Remote thermistor is working, and to be set for producing -1.0˚C increase in temperature.
	SENSOR -2.0℃		Remote thermistor is working, and to be set for producing -2.0˚C increase in temperature.
	SENSOR -3.0℃		Remote thermistor is working, and to be set for producing -3.0˚C increase in temperature.
10 AUTO RESTART			
	INVALID	○	
	VALID		
11 VENT LINK SET			
	NO VENT	○	
	VENT LINK		In case of Single split series, by connecting ventilation device to CNT of the indoor printed circuit board (in case of VRF series, by connecting it to CND of the indoor printed circuit board), the operation of ventilation device is linked with the operation of indoor unit.
	NO VENT LINK		In case of Single split series, by connecting ventilation device to CNT of the indoor printed circuit board (in case of VRF series, by connecting it to CND of the indoor printed circuit board), you can operate /stop the ventilation device independently by (VENT) button.
12 TEMP RANGE SET			
	INDN CHANGE	○	If you change the range of set temperature, the indication of set temperature will vary following the control.
	NO INDN CHANGE		If you change the range of set temperature, the indication of set temperature will not vary following the control, and keep the set temperature.
13 I/U FAN			
	HI-MID-LO	※	Airflow of fan becomes of - - or the four speed of - - - .
	HI-LO	※	Airflow of fan becomes of - .
	HI-MID		Airflow of fan becomes of - .
	1 FAN SPEED	※	Airflow of fan is fixed at one speed.
14 POSITION			If you change the remote controller function "14 POSITION", you must change the indoor function "04 POSITION" accordingly.
	4POSITION STOP	○	You can select the louver stop position in the four.
	FREE STOP		The louver can stop at any position.
15 MODEL TYPE			
	HEAT PUMP	※	
	COOLING ONLY	※	
16 EXTERNAL CONTROL SET			
	INDIVIDUAL	○	If you input signal into CNT of the indoor printed circuit board from external, the indoor unit will be operated independently according to the input from external.
	FOR ALL UNITS		If you input into CNT of the indoor printed circuit board from external, all units which connect to the same remote controller are operated according to the input from external.
17 ROOM TEMP INDICATION SET			
	INDICATION OFF	○	
	INDICATION ON		In normal working indication, indoor unit temperature is indicated instead of airflow. (Only the master remote controller can be indicated.)
18 INDICATION			
	INDICATION ON	○	
	INDICATION OFF		Heating preparation indication should not be indicated.
19 ℃/℉ SET			
	℃	○	Temperature indication is by degree C
	℉		Temperature indication is by degree F

To next page

ON/OFF button (finished)

Note 1: The initial setting marked " ※ " is decided by connected indoor and outdoor unit, and is automatically defined as following table.

Function No.	Item	Default	Model
Remote controller function02	AUTO RUN SET	AUTO RUN ON	"Auto-RUN" mode selectable indoor unit.
		AUTO RUN OFF	Indoor unit without "Auto-RUN" mode
Remote controller function06	FAN SPEED SW	VALID	Indoor unit with two or three step of air flow setting
		INVALID	Indoor unit with only one of air flow setting
Remote controller function07	LOUVER SW	VALID	Indoor unit with automatically swing louver
		INVALID	Indoor unit without automatically swing louver
Remote controller function13	I/U FAN	HI-MID-LO	Indoor unit with three step of air flow setting
		HI-LO	Indoor unit with two step of air flow setting
		HI-MID	
		1 FAN SPEED	Indoor unit with only one of air flow setting
Remote controller function15	MODEL TYPE	HEAT PUMP	Heat pump unit
		COOLING ONLY	Exclusive cooling unit

Note 3: As for plural indoor unit, set indoor functions to each master and slave indoor unit.
But only master indoor unit is received the setting change of indoor unit function "05 EXTERNAL INPUT" and "06 PERMISSION / PROHIBISHION".

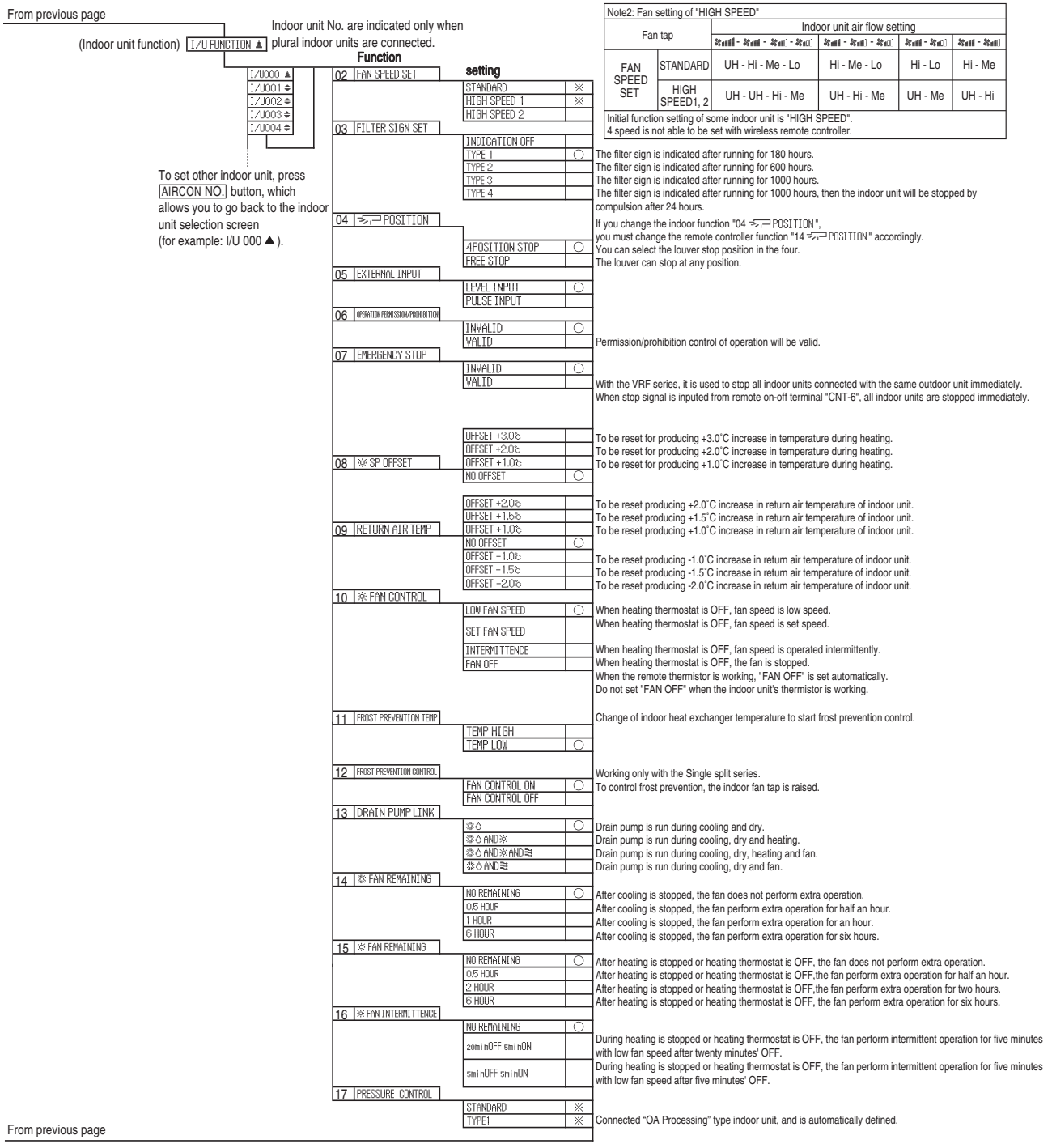

Note2: Fan setting of "HIGH SPEED"

Fan tap		Indoor unit air flow setting			
		- - - -	- - -	- -	- -
FAN SPEED SET	STANDARD	UH - Hi - Me - Lo	Hi - Me - Lo	Hi - Lo	Hi - Me
	HIGH SPEED1, 2	UH - UH - Hi - Me	UH - Hi - Me	UH - Me	UH - Hi

Initial function setting of some indoor unit is "HIGH SPEED".
4 speed is not able to be set with wireless remote controller.

How to set function

1. **Stop air-conditioner and press (SET) (MODE) buttons at the same time for over three seconds, and the "FUNCTION SET ▼" will be displayed.**

   FUNCTION SET ▼

2. **Press (SET) button.**
3. **Make sure which do you want to set, "FUNCTION ▼" (remote controller function) or "I/U FUNCTION ▲" (indoor unit function).**
4. **Press ▲ or ▼ button.**
   Selecct "FUNCTION ▼" (remote controller function) or "I/U FUNCTION ▲" (indoor unit function).

   FUNCTION ▼

   I/U FUNCTION ▲

5. **Press (SET) button.**

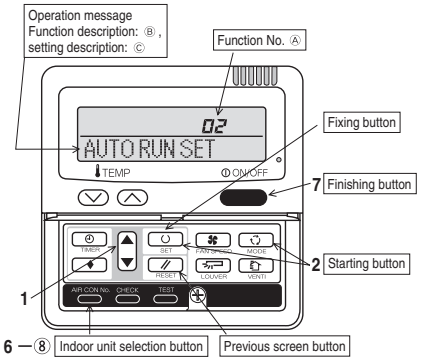

6. **【On the occasion of remote controller function selection】**

① "DATA LOADING" (Indication with blinking)
↓
Display is changed to "01 ESP SET".

② Press ▲ or ▼ button.
"No. and function"are indicated by turns on the remote controller function table, then you can select from them.
(For example)

02 ← Function No.
AUTO RUN SET ← Function

③ Press (SET) button.
The current setting of selected function is indicated.
(for example) "AUTO RUN ON" ← If "02 AUTO RUN SET" is selected

02
AUTO RUN ON ← Setting

④ Press ▲ or ▼ button.
Select the setting.

02
AUTO RUN ON
↕
02
AUTO RUN OFF

⑤ Press (SET)
"SET COMPLETE" will be indicated, and the setting will be completed.
Then after "No. and function" indication returns, Set as the same procedure if you want to set continuously ,and if to finish, go to 7.

02
SET COMPLETE

7. **Press ON/OFF button.**
   Setting is finished.

【On the occasion of indoor unit function selection】

① "DATA LOADING" (Blinking for 2 to 23 seconds to read the data)
↓
Indication is changed to "02 FAN SPEED SET".
Go to ②.

[Note]

(1) If plural indoor units are connected to a remote controller, the indication is "I/U 000" (blinking) ← The lowest number of the indoor unit connected is indicated.

I/U000 ▲

(2) Press ▲ or ▼ button.
Select the number of the indoor unit you are to set
If you select "ALL UNIT ▼", you can set the same setting with all unites.

(3) Press (SET) button.

② Press ▲ or ▼ button.
"No. and function" are indicated by turns on the indoor unit function table, then you can select from them.
(For example)

02 ← Function No.
FAN SPEED SET ← Function

③ Press (SET) button.
The current setting of selected function is indicated.
(For example) "STANDARD" ← If "02 FAN SPEED SET" is selected.

02
STANDARD ← Setting

④ Press ▲ or ▼ button.
Select the setting.

⑤ Press (SET) button.
"SET COMPLETE" will be indicated, and the setting will be completed.
Then after "No. and function" indication returns, set as the same procedure if you want to set continuously , and if to finish, go to 7.

02
SET COMPLETE

※ When plural indoor units are connected to a remote controller, press the AIRCON NO. button, which allows you to go back to the indoor unit selection screen. (example "I/U 000 ▲")

- It is possible to finish by pressing ON/OFF button on the way, but unfinished change of setting is unavailable.
- During setting, if you press (RESET) button, you return to the previous screen.
- Setting is memorized in the controller and it is saved independently of power failure.

【How to check the current setting】

When you select from "No. and funcion" and press set button by the previous operation, the "Setting" displayed first is the current setting.
(But, if you select "ALL UNIT ▼ ", the setting of the lowest number indoor unit is displayed.)

8 OUTLINE OF OPERATION CONTROL BY MICROCOMPUTER

Please refer to the service manual of 10·KX–SM–156. Only the difference are shown in this manual.

8.1 Wired remote controller (optional parts)

The figure below shows the remote controller with the cover opened. Note that all the items that may be displayed in the liquid crystal display area are shown in the figure for the sake of explanation.

Characters displayed with dots in the liquid crystal display area are abbreviated.

Pull the cover downward to open it.

The figure below shows the remote control with the cover opened.

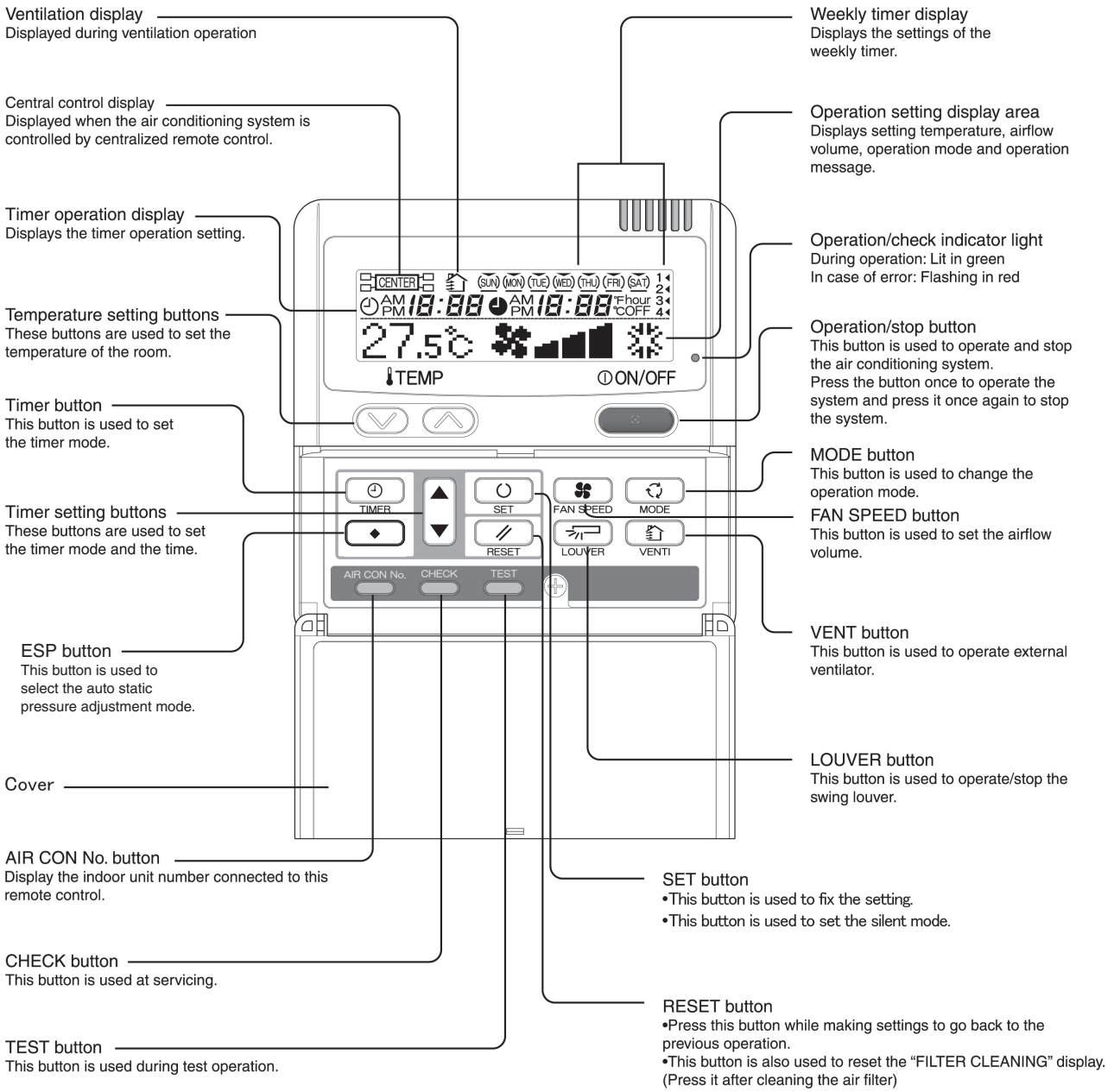

＊ All displays are described in the liguid crystal display for explanation.

Installation of remote control

DO NOT install it on the following places in order to avoid malfunction.

(1) Places exposed to direct sunlight
(2) Places near heat devices
(3) High humidity places
(4) Hot surface or cold surface enough to generate condensation
(5) Places exposed to oil mist or steam directly
(6) Uneven surface

8.2 Operation control function by the indoor controller

(1) External control (Remote display)/Remote operation

(a) Remote operation input

Remote operation inputs (switch input, timer input) connectors (CnT) are provided on the indoor control PCB.

However, the remote operation by the CnT is not effective when “Center mode” is selected with the air-conditioner.

(i) At the shipping from factory [Indoor function of wired remote controller “External input selector” is set at the level input.]

• Startup at the input signal to CnT OFF → ON [Edge input] … Air-conditioner ON

• Stop at the input signal to CnT ON → OFF [Edge input] … Air-conditioner OFF

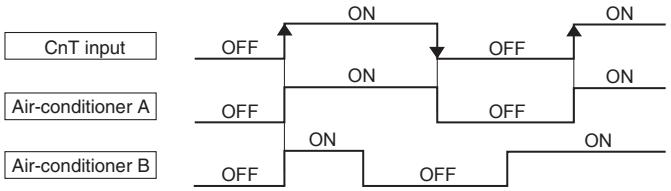

Note (1) ON marked with * means ON by a remote controller switch or other.

(ii) When the setting is changed to the pulse input at site using the indoor unit function of wired remote controller “External input selector”

It becomes effective only when the input signal to CnT is changed OFF ON and the air-conditioner operation [ON/OFF] is inverted.

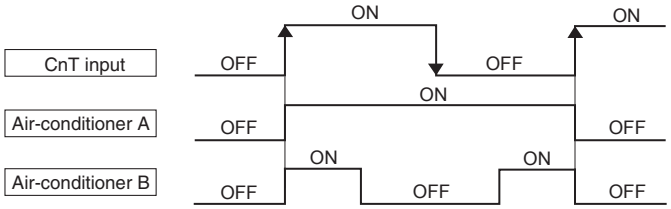

9 SYSTEM TROUBLESHOOTING PROCEDURE

Please refer to the service manual of 10·KX–SM–156. Only the difference are shown in this manual.

9.1 Trouble shooting

Error code	LED	Green	Red	Content
Remote controller: E16 7-segment display: -	Indoor	Keeps flashing	1 (2) time flash	Indoor fan motor anomaly
	Outdoor	Keeps flashing	Stays Off	

Note (1) Value in ( ) is for the FMI2.

1.Applicable model

All models

2. Error detection method

Detected by rotation speed of indoor fan motor

3. Condition of error displayed

When actual revolution speed of indoor fan motor drops to lower than 200min^{-1} for 30 seconds continuously, the compressor and the indoor fan motor stop. After 2-seconds delay, fan motor starts again automatically, but if this anomaly occurs 4 times within 60 minutes after the initial detection.

4. Presumable cause

- Indoor fan motor anomaly
- Foreign matter at rotational area of fan propeller
- Fan motor anomaly
- Dust on control PCB
- Blown fuse
- External noise, surge

5. Troubleshooting

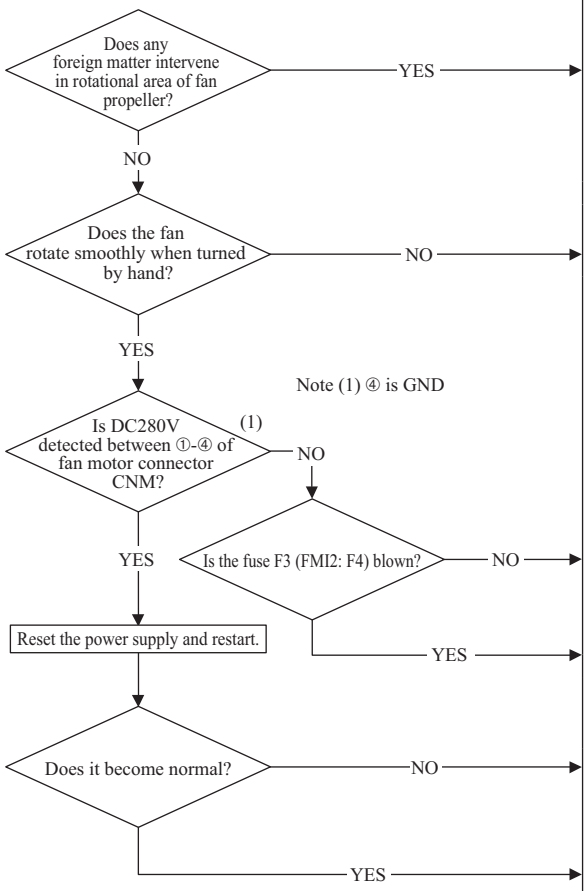

Note:

Error code	LED	Green	Red	Content
Remote controller: E20 7-segment display: -	Indoor	Keeps flashing	1 (2) time flash	Indoor fan motor rotation speed anomaly
	Outdoor	Keeps flashing	Stays Off	

Note (1) Value in ( ) is for the FMI2.

1. Applicable model

All models

2. Error detection method

Detected by rotation speed of indoor fan motor

3. Condition of error displayed

When the actual fan rotation speed does not reach to the speed of [required speed −50rpm] after 2 minutes have been elapsed since the fan motor rotation speed command was output, the unit stops by detecting indoor fan motor anomaly.

4. Presumable cause

- Indoor fan motor anomaly
- Foreign matter at rotational area of fan propeller
- Fan motor anomaly
- Dust on control PCB
- Blown fuse
- External noise, surge

5. Troubleshooting

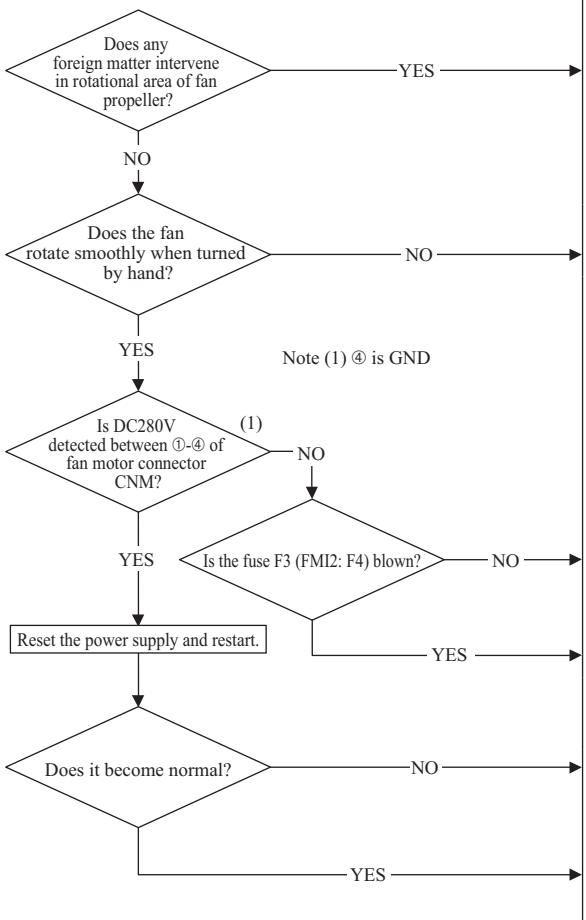

Note:

9.2 Indoor unit PCB replacement procedure

(1) Control PCB

PSB012D991

SAFETY PRECAUTIONS

- Read the "SAFETY PRECAUTIONS" carefully first of all and then strictly follow it during the replacement in order to protect yourself.
- The precautionary items mentioned below are distinguished into two levels, WARNING and CAUTION.
  Both mentions the important items to protect your health and safety so strictly follow them by any means.

⚠ WARNING	Wrong installation would cause serious consequences such as injuries or death.
⚠ CAUTION	Wrong installation might cause serious consequences depending on circumstances.

- After completing the replacement, do commissioning to confirm there are no abnormalities.

⚠ WARNING

- Replacement should be performed by the specialist.
  If you replace the PCB by yourself, it may lead to serious trouble such as electric shock or fire.
- Replace the PCB correctly according to these instructions.
  Improper replacement may cause electric shock or fire.
- Shut off the power before electrical wiring work.Start the work after elapsing 1 minutes or more from power off.
  Replacement during the applying the current would cause the electric shock, unit failure or improper running.
  It would cause the damage of connected equipment such as fan motor,etc.
- Fasten the wiring to the terminal securely, and hold the cable securely so as not to apply unexpected stress on the terminal.
  Loose connections or hold could result in abnormal heat generation or fire.
- Check the connection of wiring to PCB correctly before turning on the power, after replacement.
  Defectiveness of replacement may cause electric shock or fire.

⚠ CAUTION

- In connecting connector onto the PCB, connect not to deform the PCB. It may cause breakage or malfunction.
- Insert connecter securely, and hook stopper. It may cause fire or improper running.
- Bundle the cables together so as not to be pinched or be tensioned. It may cause malfunction or electric shock for disconnection or deformation.

Replace and set up the PCB according to this instruction.

①Set to an appropriate address and function using switch on PCB.

Select the same setting with the removed PCB.

Item	Switch	Content of control	
Address	SW1,2(Blue)	Indoor unit address : 00～99	
	SW5-2	OFF	Indoor unit address : under 100
		ON	Indoor unit address : 100 or more
	SW3,4(Green)	Outdoor unit address	

Item	Switch	Content of control	
Superlink setting	SW5-1	OFF	Automatic adjustment
		ON	Fixed previous version of Superlink protocol
Test run	SW7-1	OFF	Normal
		ON	Operation check/drain motor test run

②Set to an appropriate capacity using the model selector switches (SW6).

Select the same setting with the removed PCB.

Setting model	SW6 -1	-2	-3	-4
22	—	—	—	—
28	○	—	—	—
36	—	○	—	—
45	—	—	○	—
56	—	○	○	—
71	—	—	—	○

Setting model	SW6 -1	-2	-3	-4
90	—	○	—	○
112	○	○	—	○
140	—	—	○	○
160	○	—	○	○

○: ON —: OFF

SW6

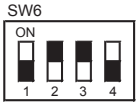

Example setting for 56.

③Replace the PCB

1. Exchange PCB after detaching all connectors connected with the PCB.
2. Fix the PCB so as not to pinch the wirings.
3. Connect connectors to the PCB. Match the wiring connector to the connector color on the PCB and connect it.

④Control PCB

Parts mounting are different by the kind of PCB.

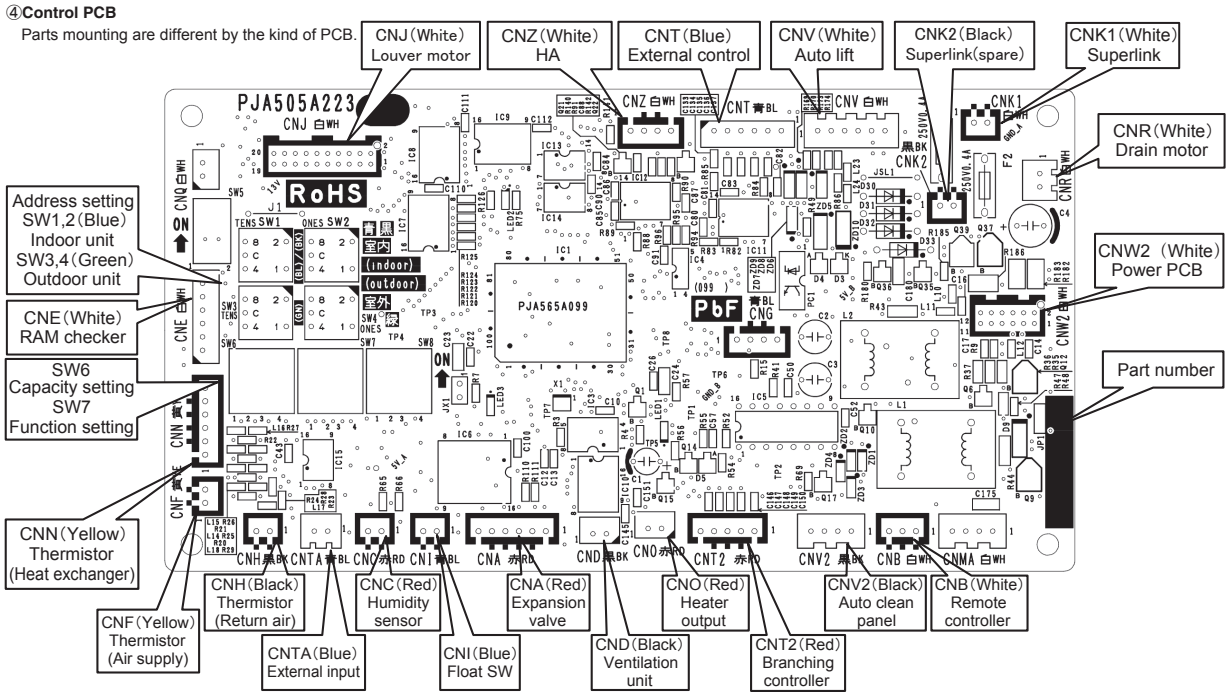

(2) Power PCB

PSB012D992

PSB012D993

SAFETY PRECAUTIONS

- Read the "SAFETY PRECAUTIONS" carefully first of all and then strictly follow it during the replacement in order to protect yourself.
- The precautionary items mentioned below are distinguished into two levels, WARNING and CAUTION.
  Both mentions the important items to protect your health and safety so strictly follow them by any means.

⚠ WARNING	Wrong installation would cause serious consequences such as injuries or death.
⚠ CAUTION	Wrong installation might cause serious consequences depending on circumstances.

- After completing the replacement, do commissioning to confirm there are no abnormalities.

⚠ WARNING

- Replacement should be performed by the specialist.
  If you replace the PCB by yourself, it may lead to serious trouble such as electric shock or fire.
- Replace the PCB correctly according to these instructions.
  Improper replacement may cause electric shock or fire.
- Shut off the power before electrical wiring work.Start the work after elapsing 1 minutes or more from power off.
  Replacement during the applying the current would cause the electric shock, unit failure or improper running.
  It would cause the damage of connected equipment such as fan motor,etc.
- Fasten the wiring to the terminal securely, and hold the cable securely so as not to apply unexpected stress on the terminal.
  Loose connections or hold could result in abnormal heat generation or fire.
- Check the connection of wiring to PCB correctly before turning on the power, after replacement.
  Defectiveness of replacement may cause electric shock or fire.

⚠ CAUTION

- In connecting connector onto the PCB, connect not to deform the PCB. It may cause breakage or malfunction.
- Insert connecter securely, and hook stopper. It may cause fire or improper running.
- Bundle the cables together so as not to be pinched or be tensioned. It may cause malfunction or electric shock for disconnection or deformation.

This PCB is a general PCB. Replace the PCB according to this instruction.

①Replace the PCB

1. Unscrew terminal of the wiring(yellow/green) connected to Terminal block（CNW0）from the box.
2. Replace the PCB only after all the wirings connected to the connector are removed.
3. Fix the board such that it will not pinch any of the wires.
4. Reconnect the wirings to the PCB. Wiring connector color should match with the color of connector of the PCB.
5. Screw back the terminal of wiring, that was removed in 1.

②Power PCB

Parts mounting are different by the kind of PCB.

Models FDUM22, 28, 36, 45, 56KXE6F

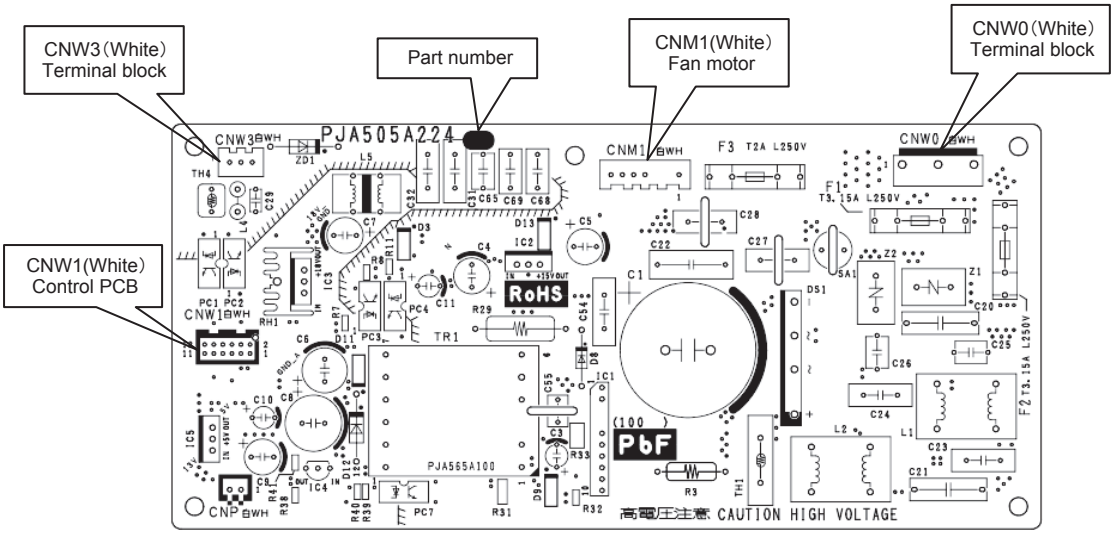

Models FDUM71, 90, 112, 140, 160KXE6F

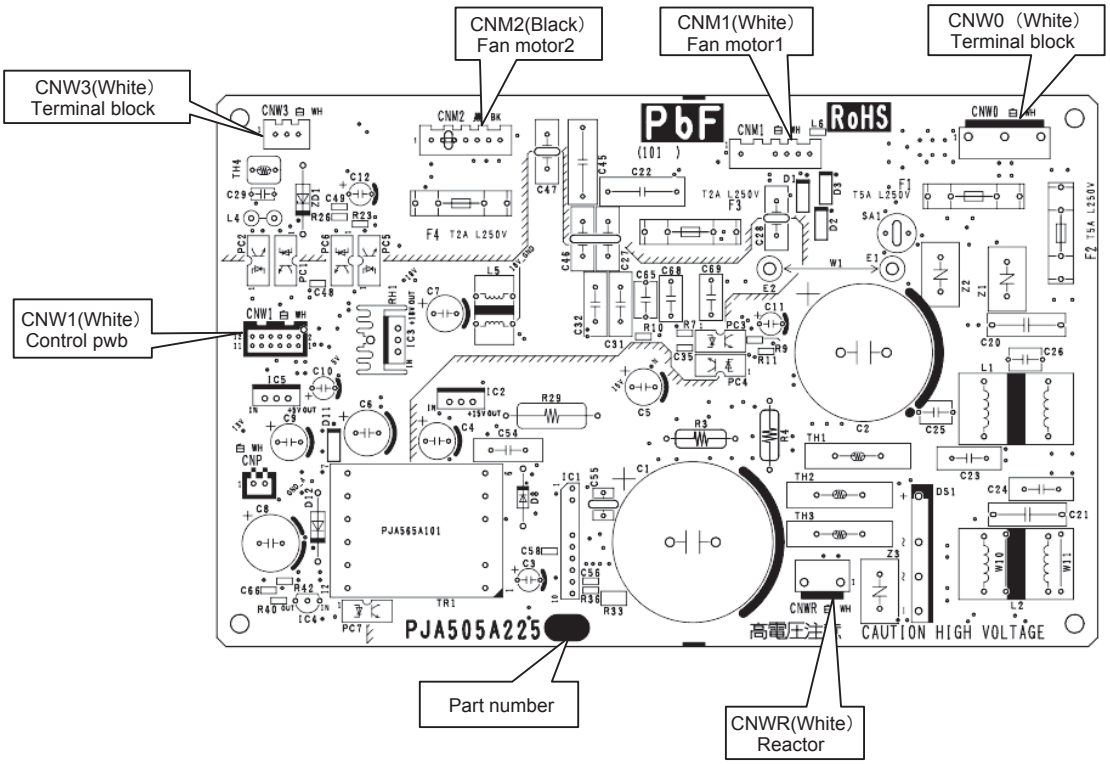

9.3 DIP switch setting list

Switches	Description		Default setting		Remarks
SW1	Indoor unit address No.(Order of 10)		0		0-9
SW2	Indoor unit address No.(Order of 1)		0		0-9
SW3	Outdoor unit address No.(Order of 10)		4		0-9
SW4	Outdoor unit address No.(Order of 1)		9		0-9
SW5-1	Superlink selection	Automatic*/Previous SL	OFF	Automatic	
SW5-2	Indoor unit address No.(Order of 100)		OFF	0	OFF: 0, ON: 1
SW6-1	Model selection		As per model		See table 1
SW6-2					
SW6-3					
SW6-4					
SW7-1	Test run, Drain motor	Normal*/Test run	OFF	Normal	
SW7-2	Reserved		OFF		Keep OFF
SW7-3	Spare		OFF		Keep OFF
SW7-4	Reserved		OFF		Keep OFF
JSL1	Superlink terminal spare	Normal*/switch to spare	With	Normal	

* Default setting

Table 1: Indoor unit model selection with SW6-1-SW6-4

0: OFF 1:ON

	P22	P28	P36	P45	P56	P71	P90	P112	P140	P160
SW6-1	0	1	0	0	0	0	0	1	0	1
SW6-2	0	0	1	0	1	0	1	1	0	0
SW6-3	0	0	0	1	1	0	0	0	1	1
SW6-4	0	0	0	0	0	1	1	1	1	1

9.4 Function of connection

Input/Output	Connecter	Function
Input	CnH	Return air temperature
	CnN1	Heat exchanger thermistor (Vend.)
	CnN2	Heat exchanger thermistor (Capi.)
	CnN3	Heat exchanger thermistor (Gas pipe)
	CNF	Supply air temperature
	CNC	Humidity
	CNI	Float switch
	CnY	Panel switch (Panel detection)
	CNS	Limit switch (Flap position detection)
	CnQ	Test mode
Output	CnJ	Flap motor (DC)
	CnJ2	Flap motor (AC)
	CNX1	Flap motor
	CNX2	Damper / Damper arm
	CnA	Electronic expansion valve actuator
	CnO	PTC Heater
	CnD	OA processing unit operation
	CnR	Drain motor
	CNM3	Fan motor (AC)
	CnV	Panel switch
	CnT2	Remote operation (4 port)
	LED2	Inspection (Red)
	LED3	Operation (Green)
Input/Output	CnT	Remote operation
	CnV	Panel switch
	CnV2	------
	CnM1	Fan motor (DC)
	CnM2	Fan motor (DC)
	CnB	Remote controller
	CnK1	Superlink protocol
	CnK2	Spare for Superlink protocol
	CnW0	Power source

10 OPTIONAL PARTS

10.1 Wireles kit (RCN-KIT3-E)

Notes:
Following functions of FDUM Type -D indoor unit series are not able to be set with this wireess remote controller (RCN-KIT3-E).
1. 4-fan speed setting (PHi/Hi/Me/Lo) →3-fan speed setting (Hi/Me/Lo)

Read this manual together with the installation manual attached to the air conditioner.

PJZ012D060a

⚠ WARNING

- Fasten the wiring to the terminal securely and hold the cable securely so as not to apply unexpected stress on the terminal.
  Loose connection or hold will cause abnormal heat generation or fire.
- Make sure the power supply is turned off when electric wiring work.
  Otherwise, electric shock, malfunction and improper running may occur.

⚠ CAUTION

- DO NOT install the wireless kit at the following places in order to avoid malfunction.
  (1)Places exposed to direct sunlight
  (2)Places near heat devices
  (3)High humidity places
  (4)Hot surface or cold surface enough to generate condensation
  (5)Places exposed to oil mist or steam directly
  (6)Uneven surface
  (7)Places affected by the direct airflow of the AC unit.
  (8)Places where the receiver is influenced by the fluorescent lamp (especially in verter type) or sunlight.
  (9)Places where the receiver is affected by infrared rays of any other communication devices.
  (10)Places where some object may obstruct the communication with the remote controller
- DO NOT leave the wireless kit without the cover.
  In case the cover needs to be detached, protect the receiver with a packaging box or bag in order to keep it away from water and dust.

Attention

- Instruct the customer how to operate it correctly referring to the instruction manual.
- User's manual of a wireless remote controller is attached to a indoor unit or a outside unit.
- Read this together with a manual attached to this kit.

① Accessories

Please make sure that you have all of the following accessories.

① Receiver	1
② Wiring (3m)	1
③ Parts set (A)	1
④ Parts set (B)	1
⑤ Parts set (C)	1
⑥ Wireless remote controller	1
⑦ User's manual	1

① Remote controller holder	1
② Screw for holder	2
③ AAA dry cell battery (R03)	2

① Screw for receiver	2
② Fixing band	1
③ Clamp	5
④ Screw for clamp	5

① Receiver installation bracket	1
② Screw for the bracket	2
③ Installation fitting	2

② Wireless remote controller's operable area

(1) **When installed on ceiling**

① Standard reachable area of the signal

condition Illuminance at the receiver : **300lux** (when no lighting is installed within 1m of the receiver in an ordinary of ce.)

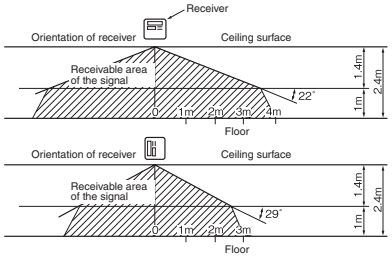

② Correlation between illuminance at the receiver and reachable area of the signal in a plain view.

condition Correlation between the reachable area of the signal and illuminance at the receiver when the remote controller is operated at 1.1m high under the condition of ceiling height of 2.5m.
When the illuminance becomes double, the area is narrowed down to two third.

(2) **When installed on wall**

condition Illuminance at the receiver : **800lux**.

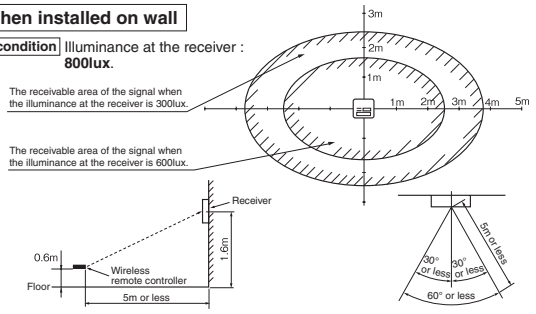

③ How to install the receiver

The following two methods can be used to install the receiver onto a ceiling or a wall.
Select a method according to the installation position.

<Installation position>

(A) Direct installation onto the ceiling with wood screws.
(B) Installation with accessory's bracket

(1) **Drilling of the ceiling (ceiling opening)**

Drill the receiver installation holes with the following dimensions at the ceiling position where wires can be connected.

(A) Direct installation onto the ceiling with wood screws.	88mm(H)×101mm(W)
(B) Installation with enclosed bracket.	108mm(H)×108mm(W)

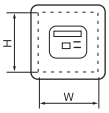

(2) **Wiring connection of receiver**

Caution
Do not connect the wiring to the power source of the terminal block. If it is connected, printed board will be damaged.

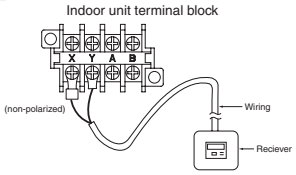

(3) **Installation of the receiver**

Remove the screw on the side of the receiver and sprit it into the upper case and lower case.Install the receiver with one of the two installation methods (A) or (B) shown below.

(A) Direct installation onto the ceiling with screws

Use this installation method when the ceiling is wooden, and there is no problem for strength in installing directly with wood screws.

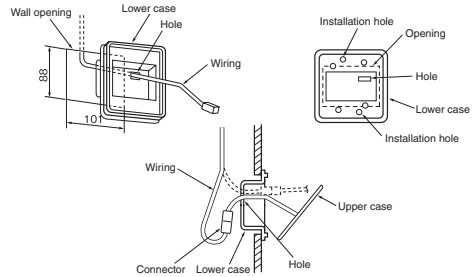

①Put through the wiring from the back side to the hole of the lower case.
②Fit the lower case into the ceiling opening. Make sure that the clearance between the convex part of the back of the lower case and the ceiling opening must be as equal as possible on both sides.
③Using the two installation holes shown above, fix the lower case onto the ceiling with the enclosed wood screws. (The other four holes are not used.)
④Connect the wiring with the wiring from the upper case by the connector.
⑤Take out the connector to the backside from the hole of the lower case putting through the wiring at ①.
⑥Fit the upper case and the lower case, and tighten the screws.

(B) Installation with enclosed bracket

Use this method when installaing onto a gypsum board (7 to 18mm), etc.

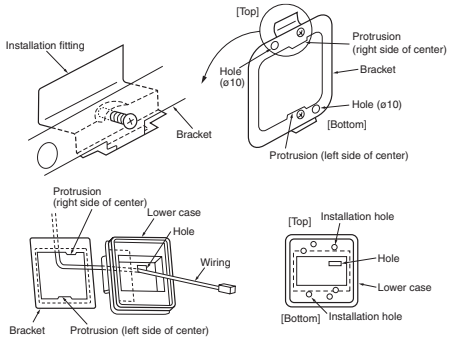

①Catch the two protrusion of the enclosed bracket onto the tting as shown above, and temporarily fix with the screws. (The bracket has an up/down and front/back orientation. Con rm the top/bottom protrusion positions and the positional relation of the ø 10 holes on the bracket and the installation hole on the lower case with the above drawing.)
②Insert the end of the installation tting into the back of the ceiling from the opening, and tighten the screws to fix the bracket onto the ceiling.
③Pass the wiring from the rear side through the hole on the lower case.
④Fit the lower case onto the bracket, and fix the lower case to the bracket using the two installation holes shown above. (The other four holes are not used.)
⑤Follow step ① to ⑥ for (A) to complete the installation.

④ Remotecontroller

Installation of the controller holder

Caution

DO NOT install it on the following places
1) Places exposed to direct sunlight
2) Places near heat devices
3) High humidity places
4) Hot surface or cold surface enough to generate condensation
5) Places exposed to oil mist or steam directly
6) Uneven surface

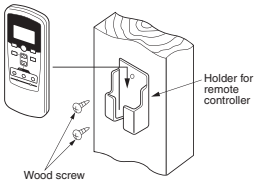

Installation tips for the remote controller holder
- Adjust and keep the holder upright.
- Tighten the screw to the end to avoid scratching the remote controller.
- DO NOT attach the holder to plaster wall.

How to insert batteries

① Detach the back lid.
② Insert the batteries. (two AAA batteries)
③ Reattach the back lid.

⑤ Cooling test run operation

- After safety con rmation, turn on the power.
- Transmit a cooling operation command with wireless remote controller, while the backup button on the receiver is pressed.
- If the backup button on the receiver is pressed during a test run, it will end the test run.
- If you cannot operate the unit properly during a test run, please check by consulting with inspection guides on the wiring diagram of outdoor units.

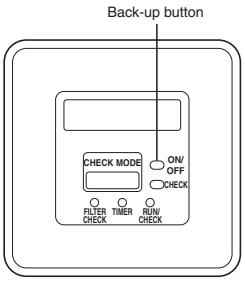

⑥ Setting of wireless remote controller and receiver

(A) Methods of avoiding the malfunction due to the mixed communication

Do both procedures ① and ②.

This setting is to avoid the mixed communication with other household electric appliances or the mixed communication when two receivers are located closely.

①**Setting change of the wireless remote controller**

Pressing ACL and AIRFLOW button at the same time or inserting the batteries with pressing AIRFLOW button will customize the signal.

Note ***When the batteries are removed, the setting will return to the default setting. Make sure to reset it when the batteries are replaced.**

②**Setting the PCB of the receiver**

Turn SW1-1 off.

●**Wireless remote controller** ●**PCB of the receiver**

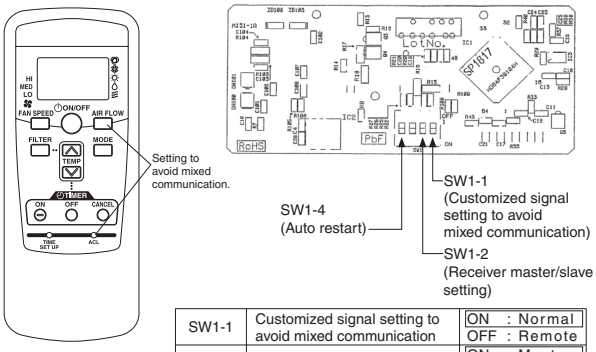

SW1-1	Customized signal setting to avoid mixed communication	ON : Normal OFF : Remote
SW1-2	Receiver master/slave setting	ON : Master OFF : Slave
SW1-4	Auto restart	ON : Valid OFF : Invalid

▭ : Default setting

(B) Control plural indoor units with one remote controller

Up to 16 indoor units can be connected.

①Connect the XY terminal with 2-core wire. As for the size, refer to the following note.

②For Packaged air conditioner series, set the indoor unit address with SW2 on the indoor unit PCB from [0] to [F] so as not to duplicate.

Restrictions on the thickness and length of wire (Maximun total extension 600m.)	
Standard	Within 100m x 0.3 mm²
	Within 200m x 0.5 mm²
	Within 300m x 0.75mm²
	Within 400m x 1.25mm²
	Within 600m x 2.0 mm²

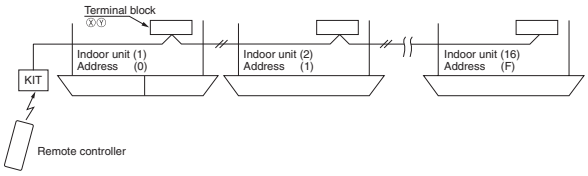

③For VRF series, set the indoor unit address with SW1, SW2 and SW5-2 on the indoor unit PCB from [000] to [127] so as not to duplicate.

(C) Master/Slave setting when using plural remote controller

Up to two receivers can be installed in one indoor unit group.

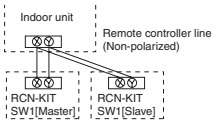

Switch	Setting	Function
SW1-2	ON	Master
	OFF	Slave

(D) Change setting of auto mode operation

Auto mode operation is prohibited to be selected for KX models (except for KXR models).
Therefore be sure to change setting of remote controller to disable the auto mode operation for these models according to the following procedure.
While pressing the MODE button, press the ACL switch, or while pressing the MODE button, insert the batteries to the remote controller. Then the auto mode can be invalid.
Attention
When the batteries are removed, it is returned to initial setting (Auto mode becomes valid).
Accordingly when replacing the batteries, be sure to perform the above operation once again.

(E) Change setting of fan speed

While pressing the FAN SPEED button, press the ACL switch, or while pressing the FAN SPEED button, insert the batteries to the remote controller. Then the fan speed can be changed from 2-speed setting to 3-speed setting.
When changing fan speed setting of remote controller, be sure to perform the same fan speed setting as that of the indoor unit model to be used.
Attention
When the batteries are removed, it is returned to initial setting (Fan speed setting is 2-speed).
Accordingly when replacing the batteries, be sure to perform the above operation once again.

10.2 Simple wired remote controller (RCH-E3)

Notes:
Following functions of Type -D indoor unit series are not able to be set with this simple wired remote controller (RCH-E3).
1. Individual flap control system (for FDT/FDTC)
2. Flap control system (for FDEN)
3. 4-fan speed setting (PHi/Hi/Me/Lo) → 3-fan speed setting (Hi/Me/Lo) (for FDT/FDTC/FDUM/FDEN)

Names and functions of sections

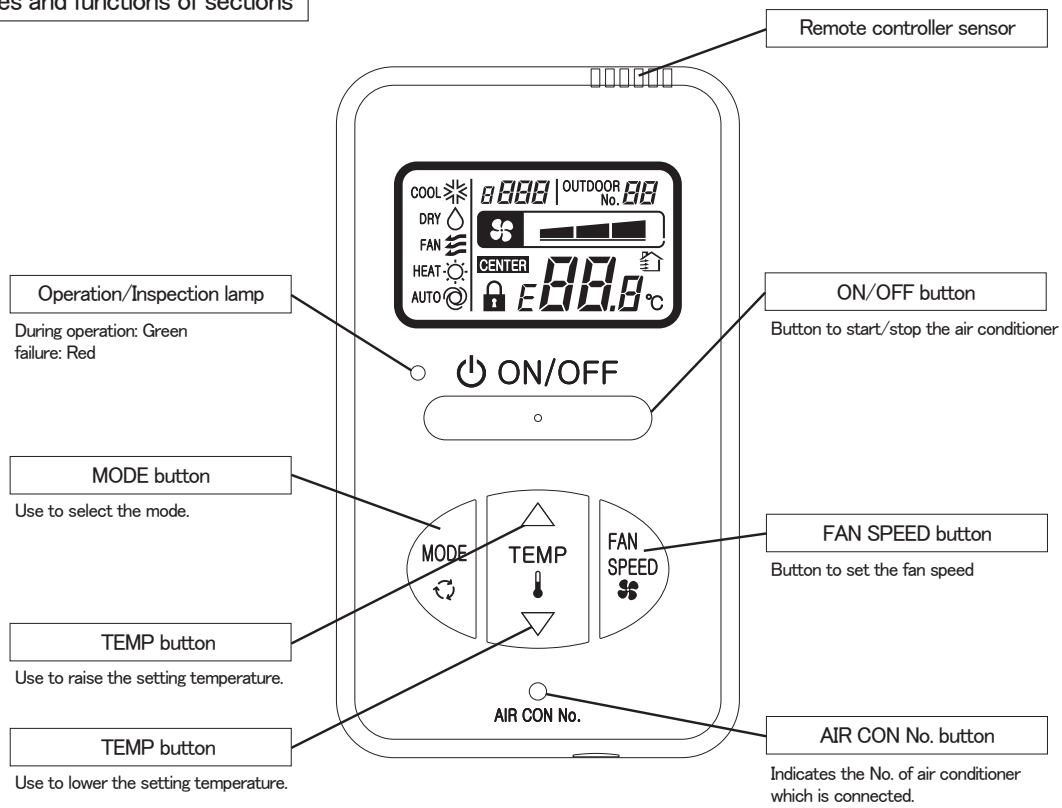

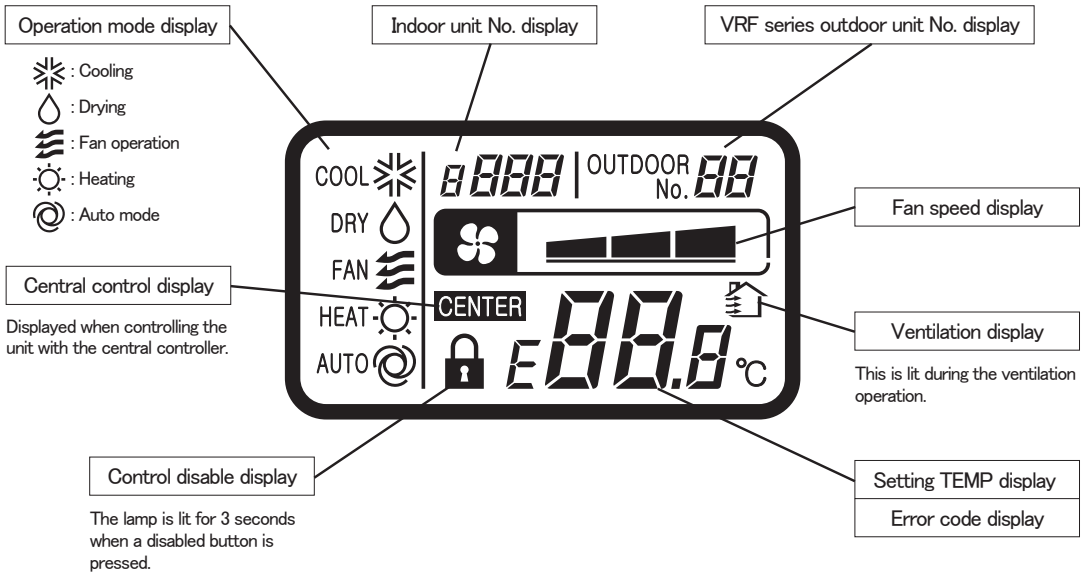

Installation of remote controller

DO NOT install the remote controller at the following places in order to avoid malfunction.

(1) Places exposed to direct sunlight
(2) Places near heat devices
(3) High humidity places
(4) Hot surface or cold surface enough to generate condensation
(5) Places exposed to oil mist or steam directly
(6) Uneven surface

PJZ000Z272 a

Remote control installation dimensions

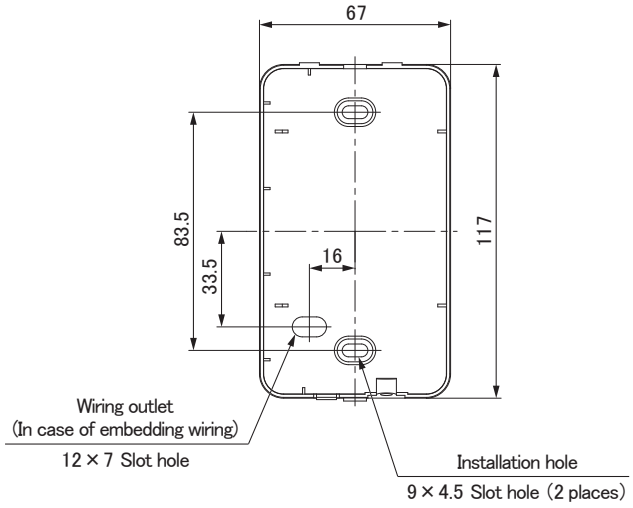

Note: Installation screw for remote controller
M4 Screw (2 pieces)

In case of embedding wiring

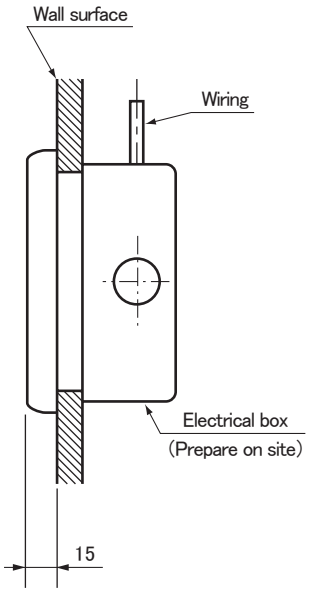

In case of exposing wiring

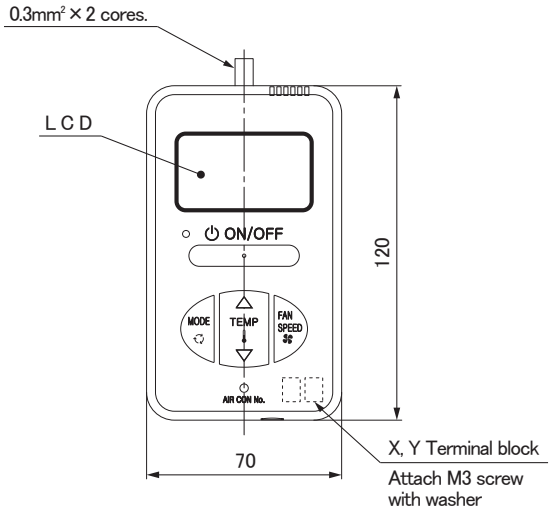

The remote controller wiring can be extracted from the upper center.
After the thin part in the upper side of the remote controller upper case is scraped with a nipper or knife, remove burr with a file.

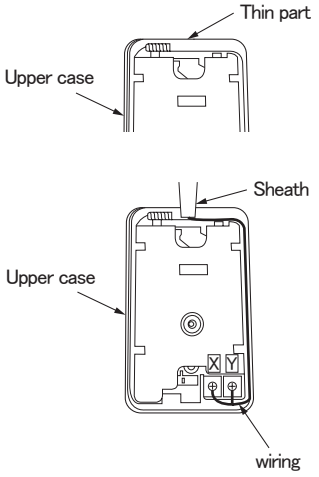

The peeling length of each wiring is as follows:

X wiring : 160mm
Y wiring : 150mm

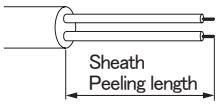

Wiring specifications

(1) Wiring of remote controller should use 0.3mm² × 2 core wires or cables. (on-site configuration)
(2) Maximum prolongation of remote controller wiring is 600m.
If the prolongation is over 100m, change to the size below.
But, the wiring in the remote controller case should be 0.3mm² (recommended) to 0.5mm².
Change the wire size outside of the case according to wire connecting. Waterproof treatment is necessary at the wire
connecting section. Be careful about contact failure.

Unit:mm

Length	Wiring thickness
100 to 200m	0.5mm² × 2 cores
Under 300m	0.75mm² × 2 cores
Under 400m	1.25mm² × 2 cores
Under 600m	2.0mm² × 2 cores

Adapted to **RoHS** directive

Simple Remote Controller Installation Manual

PJZ012D069

Read together with indoor unit's installation manual.

⚠WARNING

- **Fasten the wiring to the terminal securely and hold the cable securely so as not to apply unexpected stress on the terminal.**
  Loose connection or hold will cause abnormal heat generation or fire.
- **Make sure the power supply is turned off when electric wiring work.**
  Otherwise, electric shock, malfunction and improper running may occur.

⚠ CAUTION

- **DO NOT install the remote controller at the following places in order to avoid malfunction.**
  (1) Places exposed to direct sunlight
  (2) Places near heat devices
  (3) High humidity places
  (4) Hot surface or cold surface enough to generate condensation
  (5) Places exposed to oil mist or steam directly
  (6) Uneven surface
- **DO NOT leave the remote controller without the upper case.**
  In case the upper cace needs to be detached, protect the remote controller with a packaging box or bag in order to keep it away from water and dust.

Accessories	Remote controller, wood screw (ϕ3.5×16) 2 pieces
Prepare on site	Remote controller cord (2 cores) (Refer to [2. Installation and wiring of remote controller]) [In case of embedding cord] Electrical box, M4 screw (2 pieces) [In case of exposing cord] Cord clamp (if needed)

1. Installation procedure

In case of embedding cord

(1) Make certain to remove the screw on the bottom surface of the remote controller.

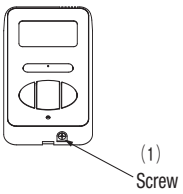

(2) Remove the upper case of the remote controller.
Insert a flat-blade screwdriver to a concave portion of the bottom surface of the remote controller and slightly twist it, and the case is removed.

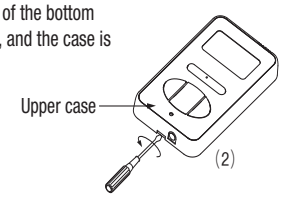

(3) Pre-bury the electrical box and remote controller cord.

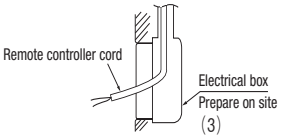

(4) Prepare two M4 screws (recommended length: 12 – 16mm), and install the lower case to the electrical box. Do not use a screw whose screw head is larger than the height of the wall around the screw hole.

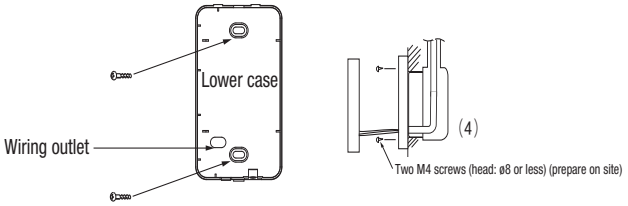

(5) Connect the remote controller cord to the terminal block.
Connect the terminals (X and Y) of the remote controller and the terminals (X and Y) of the indoor unit. (No polarity of X and Y)

(6) Mount the upper case for restoring to its former state so as not to crimp the remote controller cord, and secure with the removed screw.

In case of exposing cord

(1) Make certain to remove a screw on the bottom surface of the remote controller.

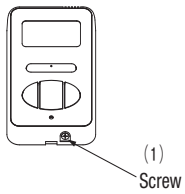

(2) Remove the upper case of the remote controller.
Insert a flat-blade screwdriver to a concave portion of the bottom surface of the remote control and slightly twist it, and the case is removed.

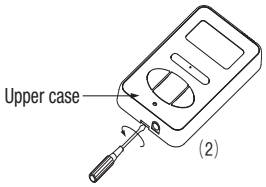

(3) The remote controller cord can be extracted from the upper center.
After the thin part in the upper side of the remote controller upper case is scraped with a nipper or knife, remove burr with a file.

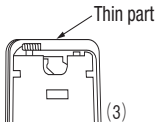

(4) The lower case of the remote controller is mounted to a flat wall with two accessory wood screws.

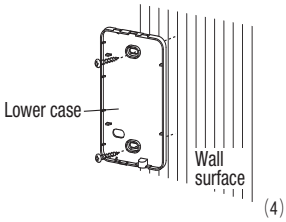

(5) Connect the remote controller cord to the terminal block.
Connect the terminals (X and Y) of the remote controller and the terminals (X and Y) of the indoor unit. (No polarity of X and Y)
The wiring route is as shown in the right.

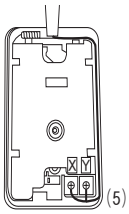

The wiring in the remote controller case should be 0.3 mm^2 (recommended) to 0.5 mm^2 at maximum.
Further, peel off the sheath.
The peeling length of each wiring is as follows:

X wiring : 160mm Y wiring : 150mm

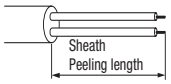

(6) Mount the upper case for restoring to its former state so as not to crimp the remote controller cord, and secure with the removed screw.

(7) In the case of exposing installation, secure the remote controller cord to the wall surface with a cord clamp so as not to loosen the remote controller cord.

2. Installation and wiring of remote controller

(1) Wiring of remote controller should use 0.3mm^2 × 2 core wires or cables. (on-site configuration)
(2) Maximum prolongation of remote controller wiring is 600 m.
If the prolongation is over 100m, change to the size below.
But, the wiring in the remote controller case should be 0.3mm^2 (recommended) to 0.5mm^2.
Change the wire size outside of the case according to wire connecting. Waterproof treatment is necessary at the wire
connecting section. Be careful about contact failure.
100 - 200m·····0.5mm^2 × 2 cores
Under 300m·····0.75mm^2 × 2 cores
Under 400m·····1.25mm^2 × 2 cores
Under 600m·····2.0mm^2 × 2 cores

3. Master/ slave setting when more than one remote controller are used

(1) Up to two remote controllers can be connected to one unit (or one group) of indoor unit.

Switch	Setting	Function detail
SW1-1	ON	Slave remote controller
	OFF	Master remote controller

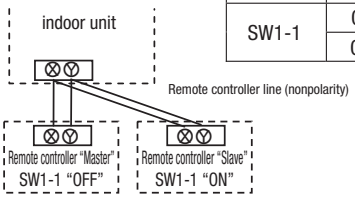

(2) Set the switch SW1-1 of the slave remote controller is "Slave" (ON). The factory default is set as "Master" (OFF).

(Note) • The remote controller thermistor enabled setting can be set only to the master remote controller.
• Install the master remote controller at the position to detect room temperature.
• The air conditioner operation follows the last operation of the remote controller in case of the master / slave setting.

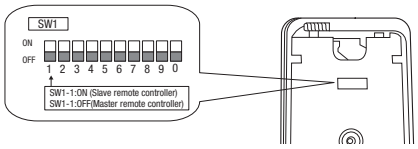

4. The indication when power source is supplied

(1) At the time of turning the power source on, after the light is on for the first 2 seconds, the display becomes as shown below.
The number displayed on the upper side of LCD in the remote control is the software number, and this is not an error code.

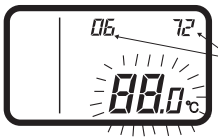

Software number
(The number in the left is one example. Another number may be shown.)

(2) Then, "88.0 °C" blinks on the remote controller until the communication between the remote controller and the indoor unit is established.

(3) In the case of connecting one remote controller with one unit (or one group) of indoor unit, make certain to set the master remote controller (factory default).
If the slave remote control is set, a communication cannot be established.

(4) If a state where the communication between the remote controller and the indoor unit cannot be established continues about for 30 minutes, "E" is displayed. Confirm the wiring of the indoor unit and the outdoor unit and master/slave setting of the remote controller.

5. Confirmation method for return air temperature

Return air temperature can be confirmed by the remote controller operation.

(1) **Press AIR CON NO. button for over 5 seconds.**
"88" blinks on the temperature setting indicator.
("88" blinks for approximately 2 seconds while data is read.)
↓
Then, the return air temperature is displayed.
(Example) return air temperature: "27 °C" (blinking)

(Note) For the return air temperature, in the normal case, the return air temperature of the indoor unit is displayed; however, in the case that the remote control thermistor is effective, detected temperature by the remote controller thermistor is displayed.

(2) **Press ⏻ ON/OFF button.**
End.

[In the case that the remote thermistor is ineffective and plural indoor units are connected to one remote controller]

(1) **Press AIR CON NO. button for over 5 seconds.**
indoor unit No. indicator: "U 000" (blinking)
(Among the connected indoor units, the lowest number is displayed.)

(2) **Press TEMP△ or TEMP▽ button.**
Select the indoor unit No.

(3) **Press MODE button.**
Dectder the indoor unit No.
(Example) indoor unit No. indicator: "U 000"
"88" blinks on the temperature setting indicator. (blinking for approximately 2 to 10 seconds while data is read) Then, the return air temperature is displayed. When AIR CON NO. is pressed, return to the indoor unit selection display (example, "U 000").

(4) **Press ⏻ ON/OFF button.**
End.

6. Function setting

Each function of the remote controller and the indoor unit is automatically set to the initial setting, which is the standard use, on the occasion of connecting the remote controller with the indoor unit. In the case of the standard use, the setting change is unnecessary. However, if you whould like to change the initial setting " ○ ", change the setting for only the item of the function number. **Record the setting contents and stored them.**

(1) Function setting item by switch on PCB

Switch No.	Setting	Setting detail	Initial setting
SW1-1	ON	Slave remote controller	
	OFF	Master remote controller	○
SW1-2	ON	Remote controller thermistor enabled	
	OFF	Remote controller thermistor disabled	○
SW1-3	ON	"MODE" button prohibited	
	OFF	"MODE" button enabled	○
SW1-4	ON	"ON/OFF" button prohibited	
	OFF	"ON/OFF" button enabled	○

Switch No.	Setting	Setting detail	Initial setting
SW1-5	ON	"TEMP" button prohibited	
	OFF	"TEMP" button enabled	○
SW1-6	ON	"FAN SPEED" button prohibited	※ Note 1
	OFF	"FAN SPEED" button enabled	※ Note 1
SW1-7	ON	Auto restart function enabled	
	OFF	Auto restart function disabled	○
SW1-8, 9, 0	ON	Not used	
	OFF		

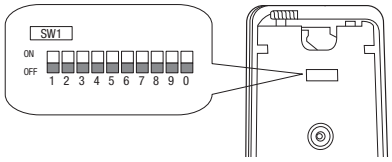

- As for the slave remote controller, function setting is impossible other than SW1-1.
- In the indoor unit with only one fan speed, "FAN SPEED" button cannot be enabled.

(2) Function setting item by button operation

Classification	Function No.	Function	Setting No.	Setting	Initial setting	Remarks
Remote controller function	01	Indoor unit fan speed	01	Fan speed: three steps	※ Note 1	The fan speed is three steps, ■■■ - ■■ - ■ .
			02	Fan speed: two steps (Hi-Lo)	※ Note 1	The fan speed is two steps, ■■■ - ■ .
			03	Fan speed: two steps (Hi-Me)		The fan speed is two steps, ■■■ - ■■ .
			04	Fan: one step	※ Note 1	The fan speed is fixed to one step.
	03	Remote controller thermistor at the time of cooling	01	Remote controller thermistor: no offset	○	
			02	Remote controller thermistor: +3.0 °C		At the time of cooling, in the case of remote controller thermistor enabled, offset temperature at +3.0°C.
			03	Remote controller thermistor: +2.0 °C		At the time of cooling, in the case of remote controller thermistor enabled, offset temperature at +2.0°C.
			04	Remote controller thermistor: +1.0 °C		At the time of cooling, in the case of remote controller thermistor enabled, offset temperature at +1.0°C.
			05	Remote controller thermistor: -1.0 °C		At the time of cooling, in the case of remote controller thermistor enabled, offset temperature at -1.0°C.
			06	Remote controller thermistor: -2.0 °C		At the time of cooling, in the case of remote controller thermistor enabled, offset temperature at -2.0°C.
			07	Remote controller thermistor: -3.0 °C		At the time of cooling, in the case of remote controller thermistor enabled, offsett temperature at -3.0°C.
	04	Remote controller thermistor at the time of heating	01	Remote controller thermistor: no offset	○	
			02	Remote controller thermistor: +3.0 °C		At the time of heating, in the case of remote controller thermistor enabled, offset temperature at +3.0°C.
			03	Remote controller thermistor: +2.0 °C		At the time of heating, in the case of remote controller thermistor enabled, offset temperature at +2.0°C.
			04	Remote controller thermistor: +1.0 °C		At the time of heating, in the case of remote controller thermistor enabled, offset temperature at +1.0°C.
			05	Remote controller thermistor: -1.0 °C		At the time of heating, in the case of remote controller thermistor enabled, offset temperature at -1.0°C.
			06	Remote controller thermistor: -2.0 °C		At the time of heating, in the case of remote controller thermistor enabled, offset temperature at -2.0°C.
			07	Remote controller thermistor: -3.0 °C		At the time of heating, in the case of remote controller thermistor enabled, offset temperature at -3.0°C.
	05	Ventilation setting	01	No ventilator connection	○	
			02	Ventilator links air-conditioner		In case of Single split series, by connecting ventilation device to CNT of the indoor printed circuit board (in case of VRF series, by connecting it to CND of the indoor printed circuit board), the operation of ventilation device is linked with the operation of indoor unit.
	06	"Auto" operation setting	01	"Auto" operation enabled	※ Note 1	
			02	"Auto" operation disabled	※ Note 1	"Auto" operation disabled
Indoor unit function	07	Operation permission/ prohibition	01	Disabled	○	
			02	Enabled		Operation permission/prohibition controller is enabled.
	08	External input	01	Level input	○	
			02	Pulse input		
	09	Fan speed setting	01	Standard	Note2	
			02	High speed 1	Note2	
			03	High speed 2	Note2	
	10	Fan remaining operation at the time of cooling	01	No remaining operation	○	After cooling stopped, no fan remaining operation
			02	0.5 hours		After cooling stopped, fan remaining operation for 0.5 hours
			03	1 hour		After cooling stopped, fan remaining operation for 1 hour
			04	6 hours		After cooling stopped, fan remaining operation for 6 hours
	11	Fan remaining operation at the time of heating	01	No remaining operation	○	After heating stopped or after heating thermostat OFF, no fan remaining operation
			02	0.5 hours		After heating stopped or after heating thermostat OFF, fan remaining operation for 0.5 hours
			03	2 hours		After heating stopped or after heating thermostat OFF, fan remaining operation for 2 hours
			04	6 hours		After heating stopped or after heating thermostat OFF, fan remaining operation for 6 hours
	12	Setting temperature offset at the time of heating	01	No offset	○	
			02	Setting temperature offset + 3.0 °C		The setting temperature at the time of heating is offset by +3.0 °C.
			03	Setting temperature offset + 2.0 °C		The setting temperature at the time of heating is offset by +2.0 °C.
			04	Setting temperature offset + 1.0 °C		The setting temperature at the time of heating is offset by +1.0 °C.
	13	Heating fan controller	01	Low fan speed	※ Note 1	At the time of heating thermostat OFF, operate with low fan speed.
			02	Setting fan speed		At the time of heating thermostat OFF, operate with the setting fan speed.
			03	Intermittent operation	※ Note 1	At the time of heatingr thermostat OFF, intermittently operate.
			04	Fan off		At the time of heating thermostat OFF, a fan will be stopped. When the remote controller thermistor is enabled, automatically set to "Fan off". Do not set at the time of the indoor unit thermistor.
	14	Return air temperature offset	01	No offset	○	
			02	Return air temperature offset +2.0 °C		Offset the return air temperature of the indoor unit by +2.0 °C.
			03	Return air temperature offset +1.5 °C		Offset the return air temperature of the indoor unit by +1.5 °C.
			04	Return air temperature offset +1.0 °C		Offset the return air temperature of the indoor unit by +1.0 °C.
			05	Return air temperature offset -1.0 °C		Offset the return air temperature of the indoor unit by -1.0 °C.
			06	Return air temperature offset -1.5 °C		Offset the return air temperature of the indoor unit by -1.5 °C.
			07	Return air temperature offset -2.0 °C		Offset the return air temperature of the indoor unit by -2.0 °C.

Note 1: The symbol " ※ " in the initial setting varies depending upon the indoor unit and the outdoor unit to be connected, and this is automatically determined as follows:

Swith No. Function No.	Function	Setting	Product model
SW1-6	"FAN SPEED" button	"FAN SPEED" button prohibited	Product model whose indoor fan speed is only one step
		"FAN SPEED" button enabled	Product model whose indoor fan speed is two steps or three steps
Remote controller function 01	Indoor unit fan speed	Fan speed: three steps	Product model whose indoor unit fan speed is three steps
		Fan speed: two steps (Hi-Lo)	Product model whose indoor unit fan speed is two steps
		Fan speed: two steps (Hi-Me)	
		Fan: one step	Product model whose indoor unit fan speed is only one step
Remote controller function 06	"Auto" operation setting	"Auto" operation enabled	Product model where "Auto" mode is selectable
		"Auto" operation disabled	Product model without "Auto" mode
Indoor unit function 13	Heating fan control	Low fan speed	Product model except FDUS
		Intermittent operation	FDUS

Note 2: Fan speed of "High speed" setting

Fan speed setting	Indoor unit fan speed setting		
	■■■ - ■■ - ■	■■■ - ■	■■■ - ■■
Standard	Hi — Mid — Lo	Hi — Lo	Hi — Mid
High speed 1・2	UHi — Hi — Mid	UHi — Mid	UHi — Hi

Initial setting of some indoor unit is "High speed".

Note 3: As for plural indoor unit, set indoor functions to each master and slave indoor unit.
But only master indoor unit is received the setting change of indoor unit function "07 Operation permission/ prohibition" and "08 External input".

7. How to set functions by button operation

(1) **Stop air-conditioning, and simultaneously press AIR CON NO. and MODE buttons at the same time for over three seconds.**
The function number "01" blinks in the upper right.

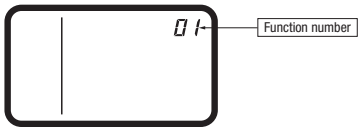

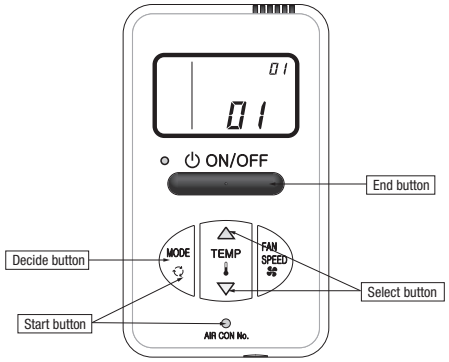

(2) **Press TEMP△ or TEMP▽ button.**
Select the function number.

(3) **Press MODE button.**
Decide the function number.

(4) **[In the case of selecting the remote controller function (01-06)]**
① The current setting number of the selected function number blinks
(Example)
Function number: "01" (lighting)
Setting number: "01" (blinking)

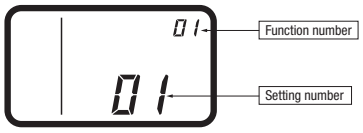

② **Press TEMP△ or TEMP▽ button.**
Select the setting number.
③ **Press MODE button.**
The setting is completed.
Light is on for approximately 3 to 20 seconds while data of the decided function No. and setting No. is transmitted.
(Example)
Function number: "01" (lighting for 3 to 20 seconds)
Setting number: "01" (lighting for 3 to 20 seconds)

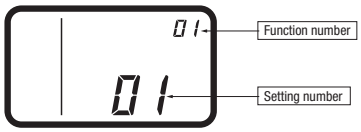

Then, the screen goes back to the function number blinking indication (1), if the setting is sequentially conducted, continue with the same procedures. If the setting is finished, proceed to (5).

[In the case of selecting the indoor unit function (07-14)]
① **"88" blinks on the temperature setting indicators.**
(blinking for approximately 2 to 10 seconds while data is read)
↓
After that, the current setting number of the selected function number blinks.
(Example)
Function number: "07" (lighting)
Setting number: "01" (blinking)

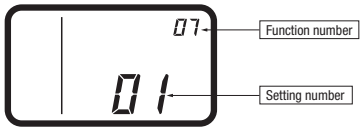

Proceed to ②.

[Note]
a. In the case of connecting one remote control to plural indoor units, the display will be as follows:
Indoor unit No. display: "U 000" (blinking)
(Display the lowest number among the connected indoor units.)

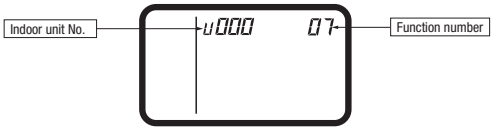

b. Press TEMP△ or TEMP▽ button.
Select the indoor unit No. to be set.
If "U ALL" is selected, the same setting can be set to all units.
c. Press MODE button.
Decide the indoor unit No.
"88" blinks on the temperature setting indicators. (blinking for 2 to 10 seconds while data is read)
When AIR CON NO. button is pressed, go back to the indoor unit selection display (for example, "U 000" blinking).

② **Press TEMP△ or TEMP▽ button.**
Select the setting number

③ **Press MODE button.**
The setting is completed.
Light is on for approximately 3 to 20 seconds while data of the decided function No. and setting No. is transmitted.
(Example)
Indoor unit No.: "U 000" (lighting for 3 to 20 seconds)
Function number: "07" (lighting for 3 to 20 seconds)
Setting number: "01" (lighting for 3 to 20 seconds)

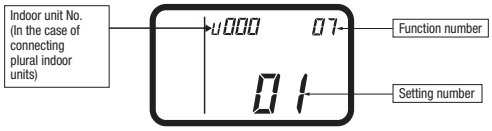

Then, the screen goes back to the function number blinking indication (1), if the setting is sequentially conducted, continue with the same procedures. If the setting is finished, proceed to (5).

(5) **Press ON/OFF button.**
The setting is completed.

- Even if ON/OFF button is pressed during setting, the setting is ended. However, any details where the setting has not been completed will be ineffective.
- The setting contents are stored in the controller, and even if the power failure occur, this will not be lost.

[Confirmation method for current setting]
According to the operation, the "setting number" displayed first after selecting "function number" and pressing MODE button is the currently set content.
(However, in the case of selecting "U ALL" (all units), the setting number of the lowest number among the indoor units is displayed.)

PJZ012D076

10.3 Filter kit

This manual contains installation points and operating instructions for the filter kit manufactured by MHI.
Carry out the work following the instructions below.
This manual also contains information on the usage after installation,
so keep this manual properly with USER'S MANUAL provided with the indoor unit.

⚠ CAUTION

- After unpacking, carry out this work on the ground.
- Do not carry out the work during operation, or there is a danger of being entangled in the rotating parts and getting injured.
- Clean the air filter regularly.
- Be sure to entrust qualified serviceman to performance on the air filter.
- Be sure to cut off the power and stop the unit before performing maintenance.

1. Table of filter kit parts No. and corresponding object models

	Small model	Medium model	Large model
Single type	50	60, 71	100 - 140
Multi type	22 - 56	71, 90	112 - 160
Filter Kit	UM-FL1EF	UM-FL2EF	UM-FL3EF

2. Parts list of filter kit

Filter	Rail	Insulation
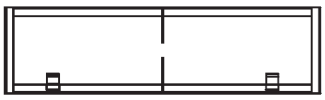 1pc	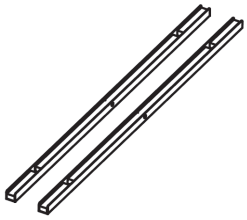 2pc	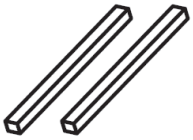 2pc

Bracket	Parts set (screw)	
 1pc	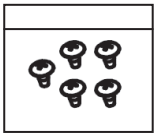 (small and medium-sized model : 5pcs.)	 (large model : 7pcs.) 1pc

3. Installation Points

(1) Stick the insulation on both inner sides of the duct, leaving no space up and down.

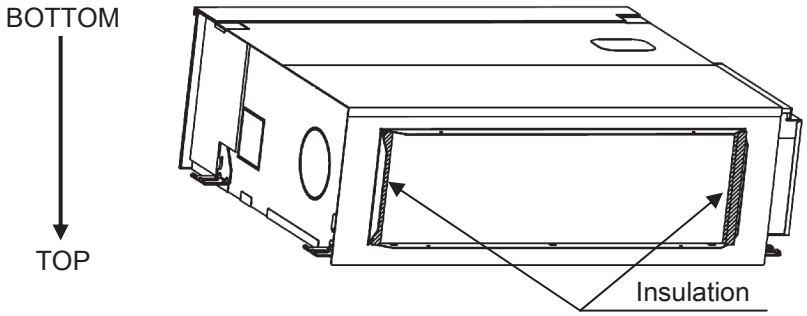

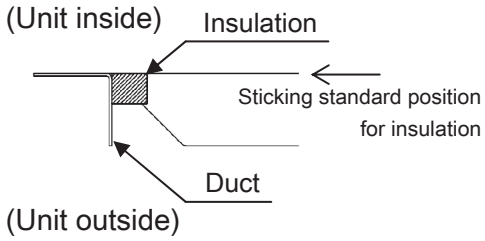

(*) After unpacking, bottom side of the unit is located at the upper side.

(2) Install the rail on both inner sides of the duct with the screw.

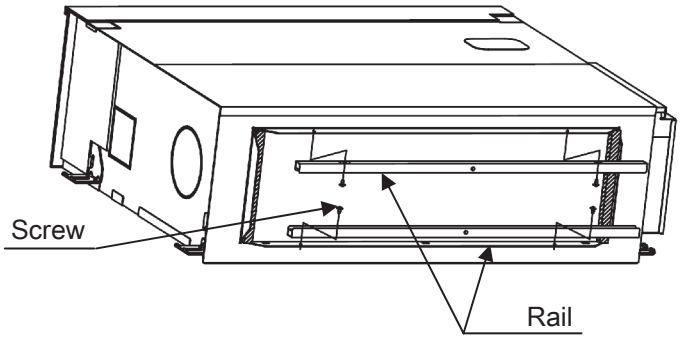

(3) Install the air filter on the rails.

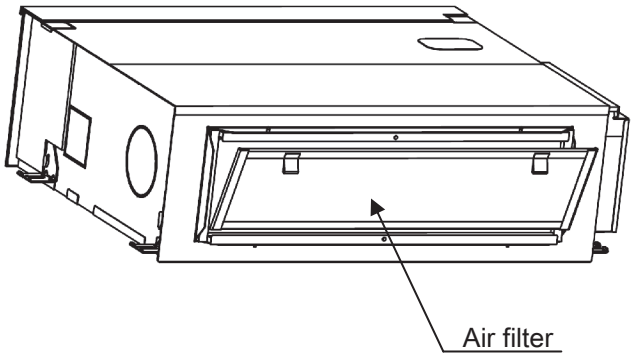

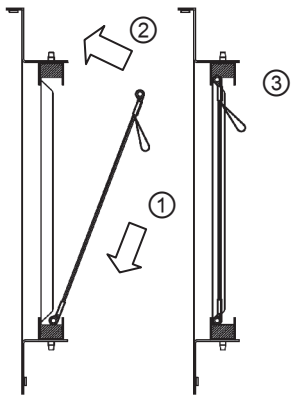

Installation procesure

(4) Install the bracket on the rail with the screw.

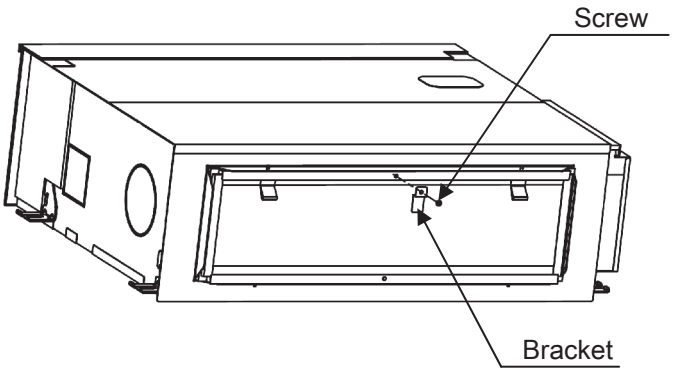

(**) When the unit is installed, bottom side of the unit is located at the lower side.

VRF INVERTER MULTI-SYSTEM AIR CONDITIONERS

MITSUBISHI HEAVY INDUSTRIES, LTD.

Air-Conditioning & Refrigeration Systems Headquarters
16-5, Konan 2-chome, Minato-ku, Tokyo, 108-8215 Japan
http://www.mhi.co.jp