SPLIT TYPE
ROOM AIR CONDITIONER

WALL MOUNTED type
INVERTER MULTI

SERVICE INSTRUCTION

Models	Indoor unit	Outdoor unit
	ASU9RMLQ	AOU24RML
	ASU12RMLQ	AOU36RML
	ASU18RMLQ	

Refrigerant
R410A

FUJITSU GENERAL LIMITED

CONTENTS

1. DESCRIPTION OF EACH CONTROL OPERATION

1. CAPACITY CONTROL..... 01-01
2. AUTO CHANGEOVER OPERATION..... 01-01
3. INDOOR FAN CONTROL..... 01-02
4. OUTDOOR FAN CONTROL..... 01-04
5. LOUVER CONTROL..... 01-05
6. COMPRESSOR CONTROL..... 01-06
7. TIMER OPERATION CONTROL..... 01-07
8. ELECTRONIC EXPANSION VALVE CONTROL..... 01-09
9. TEST OPERATION CONTROL..... 01-09
10. PREVENT TO RESTART FOR 3 MINUTES (3 MINUTES ST)..... 01-09
11. FOUR-WAY VALVE EXTENSION SELECT..... 01-09
12. AUTO RESTART..... 01-09
13. MANUAL AUTO OPERATION (Indoor unit body operation)..... 01-10
14. FORCED COOLING OPERATION..... 01-10
15. COMPRESSOR PREHEATING..... 01-10
16. COIL DRY OPEARTION CONTROL..... 01-10
17. DEFROST OPERATION CONTROL..... 01-11
18. OFF DEFROST OPERATION CONTROL..... 01-13
19. VARIOUS PROTECTIONS..... 01-14

2. TROUBLE SHOOTING

2-1 ERROR DISPLAY..... 02-01
2-1-1 INDOOR UNIT DISPLAY..... 02-01
2-1-2 OUTDOOR UNIT DISPLAY..... 02-03
2-1-2 WIRED REMOTE CONTROLLER DISPLAY..... 02-04
2-2 TROUBLE SHOOTING WITH ERROR CODE..... 02-06
2-3 TROUBLE SHOOTING WITH NO ERROR CODE..... 02-31
2-4 SERVICE PARTS INFORMATION..... 02-36

3. REPLACEMENT PARTS

1. EXPLODED VIEW..... 03-01
2. INVERTER ASSEMBLY SPECIFICATION..... 03-11

Refrigerant
R410A

WALL MOUNTED type
INVERTER (MULTI)

1 . DESCRIPTION OF EACH CONTROL OPERATION

1. CAPACITY CONTROL

1-1 COOLING, HEATING, DRY CAPACITY CONTROL

Compressor frequency decides by capacity of an indoor unit, operation number of an indoor unit, set temperature, room temperature and outside temperature.

2. AUTO CHANGEOVER OPERATION

When the air conditioner is set to the AUTO mode by remote control, operation starts in the optimum mode from among the HEATING, COOLING, DRY and MONITORING modes. During operation, the optimum mode is automatically switched in accordance with temperature changes. The temperature can be set between 64°F(18°C) and 88°F(30°C) in 2°F(1°C) steps.

①.When operation starts, only the indoor and outdoor fans are operated for 1 minute. After 1 minute, the room temperature and outside air temperature are sensed and the operation mode is selected in accordance with the table below.

(Fig.1 : Outside air temperature zone selection)

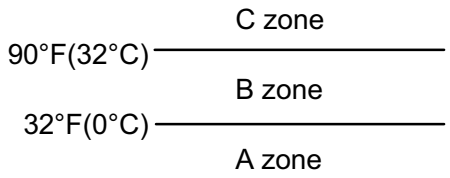

(Table.1 Operation mode selection table)

Outside air temperature (TO) / Room temperature (TB)	A zone	B zone	C zone
TB > TS+4°F(2°C)	Monitoring	Cooling (automatic dry)	Cooling (automatic dry)
TS+4°F(2°C)≧TB≧TS - 4°F(2°C)	Monitoring	Monitoring	Monitoring
TB<TS- 4°F(2°C)	Heating	Heating	Monitoring

②.When COOING was selected at ① , the air conditioner operates as follow:

- The same operation as COOLING OPERATION of item 1 above is performed.
- When the room temperature has remained at (set temperature -2°F(1°C)) for 8 minutes, operation is automatically switched to DRY and the same operation as DRY OPERATION of item 3 above is performed.
- If the room temperature reaches (set temperature +4°F(2°C) during DRY operation, operation returns to COOLING operation.

③.When HEATING was selected at ①, the same operation as HEATING OPERATION of item 2 above is performed.

④ When the compressor was stopped for 6 consecutive minutes by the temperature control function after the COOLING or HEATING operation mode was selected at ① above, operation is switched to MONITORING and the operation mode is selected again.

3. INDOOR FAN CONTROL

(1).Fan speed

(Table 2 : Indoor Fan Speed)

ASU9RMLQ		
Operation mode	Air flow mode	Speed (rpm)
Heating	Hi	1,200
	Me+	1,200
	Me	1,070
	Lo	970
	Quiet	850
	Cool air prevention	800
	S-Lo	480
Cooling Fan	Hi	1,200
	Me	1,070
	Lo	900
	Quiet	800
Dry		800

ASU12RMLQ		
Operation mode	Air flow mode	Speed (rpm)
Heating	Hi	1,380
	Me+	1,380
	Me	1,230
	Lo	1,110
	Quiet	960
	Cool air prevention	850
	S-Lo	480
Cooling Fan	Hi	1,380
	Me	1,230
	Lo	1,050
	Quiet	900
Dry		900

ASU18RMLQ		
Operation mode	Air flow mode	Speed (rpm)
Heating	Hi	1,540
	Me+	1,480
	Me	1,380
	Lo	1,200
	Quiet	1,060
	Cool air prevention	850
	S-Lo	480
Cooling Fan	Hi	1,540
	Me	1,380
	Lo	1,200
	Quiet	1,060
Dry		1,060

(2).FAN OPERATION

The airflow can be switched in 5 steps such as AUTO, QUIET, LOW, MED, HIGH, while the indoor fan only runs.

When Fan mode is set at (Auto), it operates on (MED) Fan Speed.

(3). COOLING OPERATION

Switch the airflow [AUTO], and the indoor fan motor will run according to a room temperature, as shown in Figure 2.
On the other hand, if switched in [HIGH] ～[QUIET], the indoor motor will run at a constant airflow of [COOL] operation modes QUIET, LOW, MED, HIGH, as shown in Table 2.

(Fig.2)
airflow change - over (Cooling: AUTO)

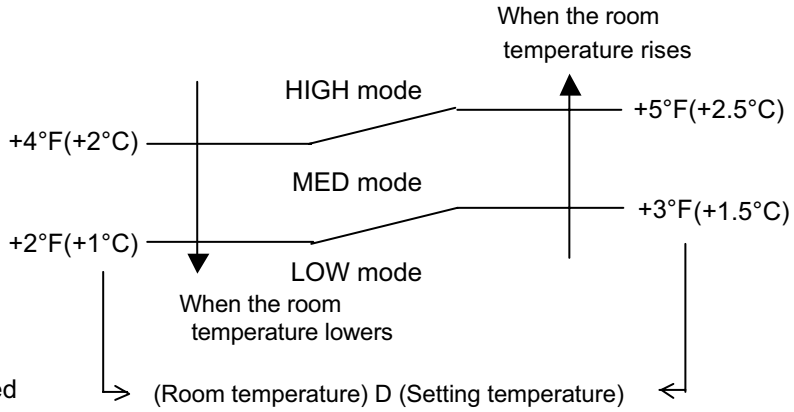

(4). DRY OPERATION

During the dry mode operation, the fan speed setting can not be changed. (S-Lo)

(5). HEATING OPERATION

Switch the airflow [AUTO], and the indoor fan motor will run according to a room temperature, as shown in Figure 3.
On the other hand, if switched [HIGH] ～ [QUIET], the indoor motor will run at a constant airflow of [HEAT] operation modes QUIET, LOW, MED, HIGH, as shown in Table 2.

(Fig.3)
airflow change - over (Heating: AUTO)

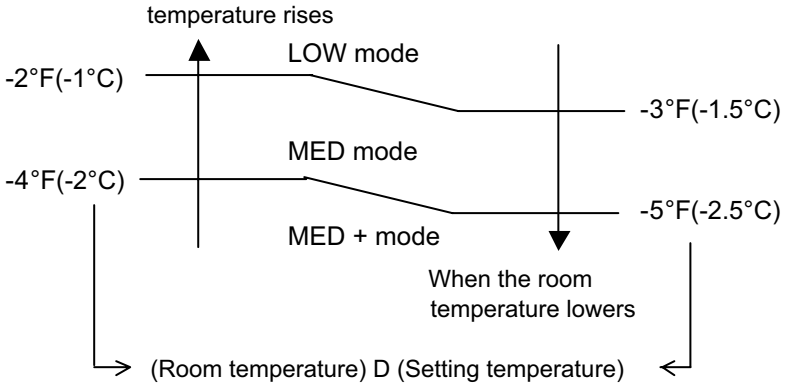

(6). COOL AIR PREVENTION CONTROL (Heating mode)

The maximum value of the indoor fan speed is set as shown in Figure 4, based on the detected temperature by the indoor heat exchanger sensor on heating mode.

(Fig.4 : Cool Air Prevention Control)

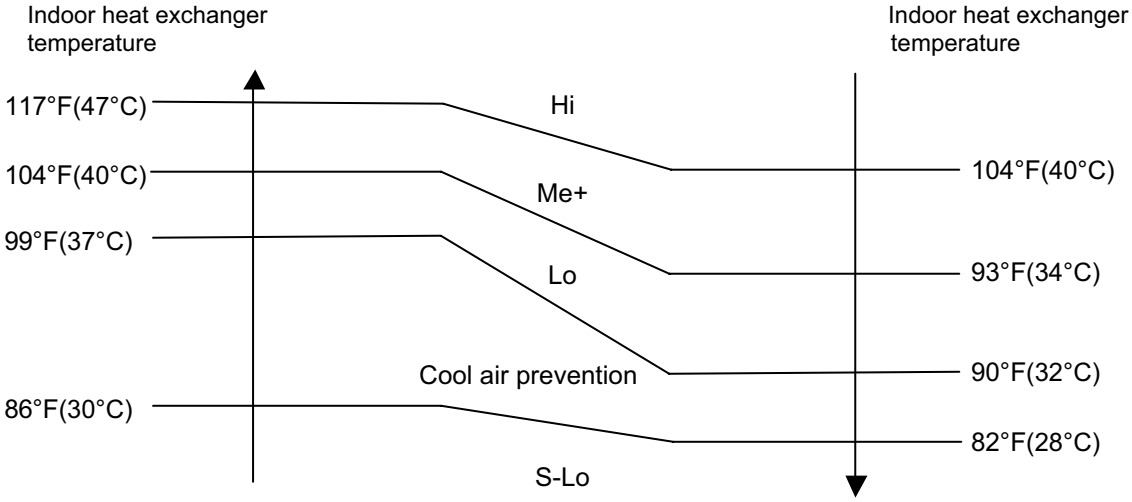

4. OUTDOOR FAN CONTROL

(1). Fan Speed

The speed of outdoor unit fan motor is determined at outside temperature and compressor rotation.

(Table 2 : Target fan speed)

AOU24/36RML		Compressor rotation [Hz]				
Frequency rise		10≦F<20	20≦F<30	30≦F<40	40≦F<50	50≦F<60
Frequency down		7≦F<17	17≦F<27	27≦F<37	37≦F<47	47≦F<57
Outdoor temperature		Fan rotation				
Cooling	Tout≧45	HI	HI	HI	HI	HI
	45>Tout≧38	HI	HI	HI	HI	HI
	38>Tout≧31	HI	HI	S-HI	S-HI	S-HI
	31>Tout≧26	MED	HI	HI	HI	HI
	26>Tout≧22	LOW	MED	MED	HI	HI
	22>Tout≧18	LOW	MED	MED	MED	MED
	18>Tout≧12	S-LOW	S-LOW	LOW	MED	MED
	12>Tout≧7	S-LOW	S-LOW	S-LOW	LOW	LOW
	7>Tout≧3	S-LOW	S-LOW	S-LOW	LOW	LOW
	3>Tout≧-3	S-LOW	S-LOW	S-LOW	S-LOW	LOW
	-3>Tout	S-LOW	S-LOW	S-LOW	S-LOW	S-LOW
Heating	Tout≧24	S-LOW	S-LOW	LOW	LOW	MED
	24>Tout≧20	S-LOW	S-LOW	LOW	LOW	MED
	20>Tout≧16	LOW	MED	MED	HI	HI
	16>Tout≧12	MED	HI	HI	HI	HI
	12>Tout≧5	HI	HI	HI	H-HI	H-HI
	5>Tout≧-1	H-HI	H-HI	H-HI	H-HI	H-HI
	-1>Tout≧-6	H-HI	H-HI	H-HI	H-HI	H-HI
	-6>Tout≧-11	H-HI	H-HI	H-HI	H-HI	H-HI
	-11>Tout	H-HI	H-HI	H-HI	H-HI	H-HI
AOU24/36RML		Compressor rotation [Hz]				
Frequency rise		60≦F<70	70≦F<80	80≦F<90	90≦F	
Frequency down		57≦F<67	67≦F<77	77≦F<87	87≦F	
Outdoor temperature		Fan rotation				
Cooling	Tout≧45	HI	HI	HI	HI	
	45>Tout≧38	HI	HI	HI	HI	
	38>Tout≧31	S-HI	S-HI	S-HI	S-HI	
	31>Tout≧26	HI	HI	S-HI	S-HI	
	26>Tout≧22	HI	HI	HI	HI	
	22>Tout≧18	HI	HI	HI	HI	
	18>Tout≧12	MED	HI	HI	HI	
	12>Tout≧7	MED	MED	MED	HI	
	7>Tout≧3	LOW	MED	MED	MED	
	3>Tout≧-3	LOW	LOW	LOW	MED	
	-3>Tout	LOW	LOW	LOW	LOW	
Heating	Tout≧24	MED	MED	MED	HI	
	24>Tout≧20	MED	MED	MED	HI	
	20>Tout≧16	HI	HI	HI	HI	
	16>Tout≧12	HI	HI	HI	HI	
	12>Tout≧5	H-HI	H-HI	H-HI	H-HI	
	5>Tout≧-1	H-HI	H-HI	H-HI	H-HI	
	-1>Tout≧-6	H-HI	H-HI	H-HI	H-HI	
	-6>Tout≧-11	H-HI	H-HI	H-HI	H-HI	
	-11>Tout	H-HI	H-HI	H-HI	H-HI	

(Table 4 : Outdoor fan speed)

(rpm)

	Speed	H-HI		S-HI		HI		MED		LOW		S-LOW	
	Mode	Cooling	Heating	Cooling	Heating	Cooling	Heating	Cooling	Heating	Cooling	Heating	Cooling	Heating
AOU24RML	Upper Fan	780	780	780	780	780	780	400	400	300	300	200	200
	Lower Fan	780	780	780	780	780	780	400	400	300	300	200	200
AOU36RML	Upper Fan	850	900	850	900	780	780	400	400	300	300	200	200
	Lower Fan	850	900	850	900	780	780	400	400	300	300	200	200

5. LOUVER CONTROL

(1). VERTICAL LOUVER CONTROL

(Function Range)

Each time the button is pressed, the air direction range will change as follow:

①→②→③→④→⑤→⑥→⑦
←　←　←　←　←　←

(Fig 5: Air Direction Range)

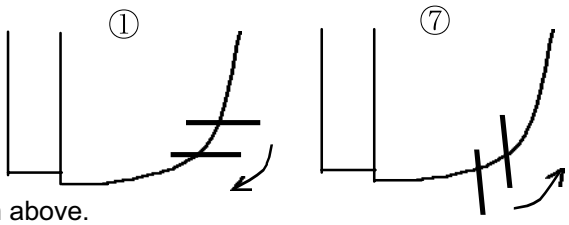

(Operation Range)

Cooling / Dry mode : ①－②－③
Heating mode : ④－⑤－⑥－⑦
Fan mode : ①－②－③－④－⑤－⑥－⑦

Use the air direction adjustments within the ranges shown above.

- The vertical airflow direction is set automatically as shown, in accordance with the type of operation selected.
  Cooling / Dry mode : Horizontal flow ①
  Heating mode : Downward flow ⑦
- When the temperature of the air being blown out is low at the start of heating operation or during defrosting, the airflow direction temporarily becomes ⑦ to prevent cold air being blown onto the body.
- During use of the Cooling and Dry modes, do not set the Air Flow Direction Louver in the Heating range (④～⑦) for long period of time, since water vapor many condense near the outlet louvers and drop of water may drip from the air conditioner. During the Cooling and Dry modes, if the Air Flow Direction Louvers are left in the hating range for more than 30 minutes, they will automatically return to position ③.
- During Monitor operation in AUTO CHANGEOVER mode, the airflow direction automatically becomes ①, and it cannot be adjusted.

(2). SWING OPERATION

When the swing signal is received from the remote controller, the vertical louver starts to swing.

(Swinging Range)

Cooling mode / Dry mode / Fan mode(①～③) : ① ⇔ ③
Heating mode / Fan mode(④～⑦) : ③ ⇔ ⑦

- When the indoor fan is either at S-lo or Stop mode, the swinging operation is interrupted and the louver stops at the memorized position.

6. COMPRESSOR CONTROL

(1). OPERATION FREQUENCY RANGE

The operation frequency of the compressor is different based on the operation mode as shown in the table 4.

(Table 4 : Compressor Operation Frequency Range)

	Cooling		Heating	
	Min	Max	Min	Max
AOU24RML	15Hz	95Hz	20Hz	95Hz
AOU36RML	15Hz	95Hz	20Hz	95Hz

(2). OPERATION FREQUENCY CONTROL AT START UP

The compressor frequency soon after the start-up is controlled as shown in the figure 6.

(Fig.6 : Compressor Control at Start-up)

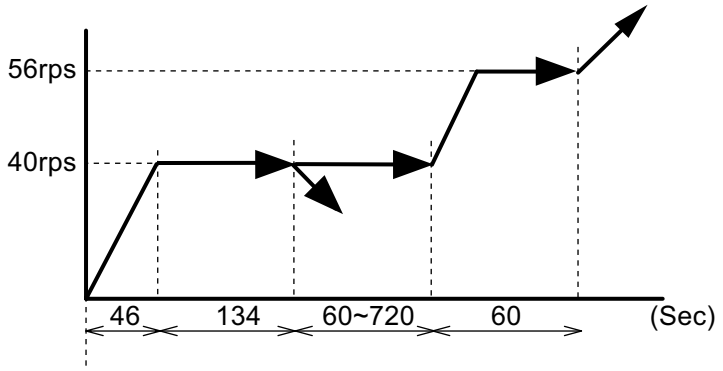

1) Compressor operates for 180 seconds by 40 rotations.
2) In the case of lower than 40 rotations, it operates at these rotations.
3) Compressor operates for 60 to 720 seconds.
   When discharge temperature exceeds 30 degrees in the meantime, it shifts to 56 rotations.
4) Compressor operates at target rotations after 60 second operation.

7. TIMER OPERATION CONTROL

The table 5 shows the available timer setting based on the product model.

(Table 5 : Timer Setting)

	ON TIMER / OFF TIMER	PROGRAM TIMER	SLEEP TIMER
ASU9RLQ	○	○	○
ASU12RLQ	○	○	○
ASU18CL	○	○	○
ASU18RL	○	○	○

(1). OPERATION FREQUENCY RANGE

・OFF timer : When the clock reaches the set time, the air conditioner will be turned off.

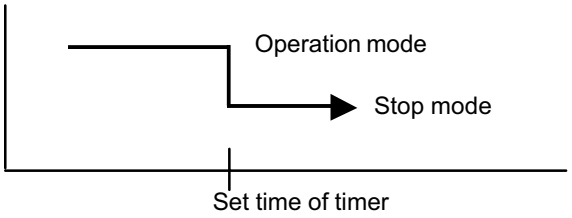

・ON timer : When the clock reaches the set time, the air conditioner will be turned on.

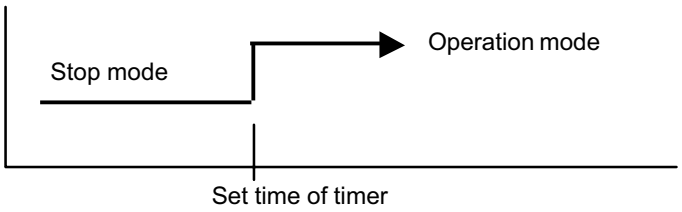

(2). PROGRAM TIMER

・The program timer allows the OFF timer and ON timer to be used in combination one time.

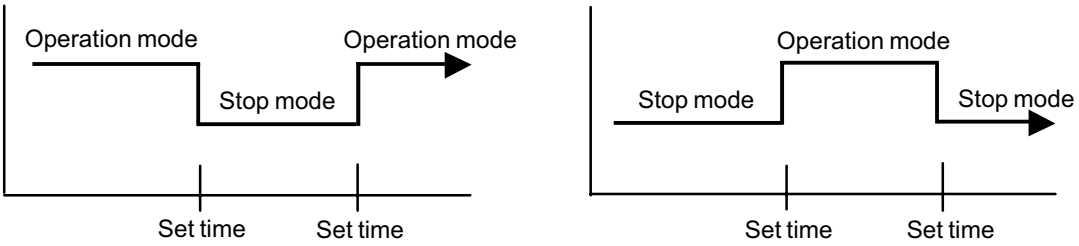

・Operation will start from the timer setting (either OFF timer or ON timer) whichever is closest to the clock's current timer setting. The order of operations is indicated by the arrow in the remote control unit's display.

・SLEEP timer operation cannot be combined with ON timer operation.

(3). SLEEP TIMER

If the sleep is set, the room temperature is monitored and the operation is stopped automatically. If the operation mode or the set temperature is change after the sleep timer is set, the operation is continued according to the changed setting of the sleep timer from that time ON.

In the cooling operation mode

When the sleep timer is set, the setting temperature is increased 2°F(1°C).
It increases the setting temperature another 2°F(1°C) after 1 hour.
After that, the setting temperature is not changed and the operation is stopped at the time of timer setting.

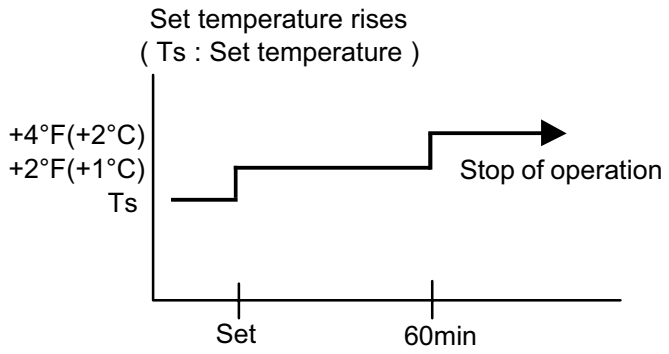

In the heating operation mode

When the sleep timer is set, the setting temperature is decreased 2°F(1°C).
It decreases the setting temperature another 2°F(1°C) every 30 minutes.
Upon lowering 8°F(4°C), the setting temperature is not changed and the operation stops at the time of timer setting.

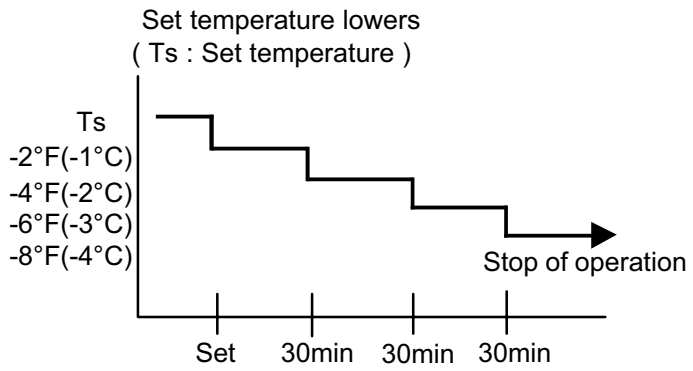

8. ELECTRONIC EXPANSION VALVE CONTROL

The most proper opening of the electronic expansion valve is calculated and controlled under the present operating condition based on the following values.
The compressor frequency, the temperatures detected by the discharge temperature sensor and the outdoor temperature sensor.

* The pulse range of the electronic expansion valve control is between 30 to 480 pulses.
* At the time of supplying the power to the outdoor unit, the initialization of the electronic expansion valve is operated (1000 pulses are input to the closing direction).

9. TEST OPERATION CONTROL

Under the condition where the air conditioner runs, press the test operation button of the remote control, and the test operation control mode will appear. During test running, the operation lamp and timer lamp of the air conditioner body twinkle simultaneously. Set the test operation mode, and the compressor will continue to run regardless of whether the room temperature sensor detects.
The test operation mode is released if 60 minutes have passed after setting up the test operation.

10. PREVENT TO RESTART FOR 3 MINUTES (3 MINUTES ST)

The compressor won't enter operation status for 2 minutes and 20 seconds after the compressor is stopped, even if any operation is given.

11. FOUR-WAY VALVE EXTENSION SELECT

At the time when the air conditioner is switched from the cooling mode to heating mode, the compressor is stopped, and the 4-way valve is switched in 3 minutes later after the compressor stopped.

12. AUTO RESTART

When the power was interrupted by a power failure, etc. during operation, the operation contents at that time are memorized and when power is recovered, operation is automatically started with the memorized operation contents.
When the power is interrupted and recovered during timer operation, since the timer operation time is shifted by the time the power was interrupted, an alarm is given by blinking (7 sec ON/2 sec OFF) the indoor unit body timer lamp.

[Operation contents memorized when the power is interrupted]

- Operation mode
- Set temperature
- Set air flow
- Timer mode and timer time
- Set air flow Direction
- Swing
- Air clean(Only ASU9, 12, 18RMLQ model) (FUJITSU)

13. MANUAL AUTO OPERATION (Indoor unit body operation)

If MANUAL AUTO Button is set, the operation is controlled as shown in Table 6.
If the remote control is lost or battery power dissipated, this function will work without the remote control.

(Table 6)

	Manual auto operation	Forced cooling operation
OPERATION MODE	Auto changeover	Cooling
FAN CONT. MODE	Auto	Hi
TIMER MODE	Continuous (No timer setting available)	-
SETTING TEMP.	75°F(24°C)	Room Temp is not controlled
SETTING LOUVER	Standard	Horizontal
SWING	OFF	OFF

14. FORCED COOLING OPERATION

Forced cooling operation is started when pressing MANUAL AUTO button for 10 seconds or more.
During the forced cooling operation, it operates regardless of room temperature sensor.
Operation LED and timer LED blink during the forced cooling operation. They blink for 1 second ON and 1 second OFF on both operation LED and timer LED (same as test operation).
Forced cooling operation is released after 60 minutes of starting operation.
The FORCED COOLING OPERATION will start as shown in Table 6.

15. COMPRESSOR PREHEATING

When the outdoor heat exchanger temperature is lower than Operation temperature (Refer to Table 7) and the heating operation has been stopped for 3 hours, power is applied to the compressor and the compressor is heated.
(By heating the compressor, warm air is quickly discharged when operation is started.)
When operation was started, and when the outdoor temperature rises to Release temperature or greater, preheating is over.

(Table 7 : Preheating Operation / Release Temperature)

	Before 24 hour		After 24 hour	
	Operation temperature	Release temperature	Operation temperature	Release temperature
AOU24RML AOU36RML	37.4°F (3°C)	44.6°F (7°C)	32°F (0°C)	39.2°F (4°C)

16. COIL DRY OR AIR CLEAN OPERATION CONTROL

(1). COIL DRY OPERATION CONTROL (MR09, 12, 18Y3FM model only) (Friedrich)

The coil-dry operation functions by pressing COIL DRY button on the remote controller.
The coil-dry operation is consisted of 3 cycles of [Fan operation 3 minutes / Heating operation 2 minutes], and Fan operates for 3 minutes at last before ending the air conditioner operation.
(It takes 18 minutes to complete the coil-dry operation.)

(2). AIR CLEAN OPERATION CONTROL (ASU9, 12, 18RMLQ model only) (FUJITSU)

The coil-dry operation functions by pressing AIR CLEAN button on the remote controller.
It continues from COIL DRY operation, it turns on electricity to AIR CLEAN UNIT, sterilization is performed for 15 minutes.
Indoor unit fan motor operation under AIR CLEAN operation : The cycle of 480rpm Fixation 5 sec ON /1 min OFF is repeated.
(It takes 33 minutes to complete the AIR CLEANING operation.)

(Table 8 : COIL-DRY or AIR-CLEAN Operating Functions)

	Indoor Fan Speed		Compressor Frequency	Louver Position	Main Unit Indication
ASU9RMLQ	900rpm	480rpm	20Hz	①	COIL-DRY or AIR-CLEAN indication : ON Other indication : OFF
ASU12RMLQ	900rpm	480rpm	22 or 25Hz	①	
ASU18RMLQ	900rpm	480rpm	22 or 25Hz	①	

17. DEFROST OPERATION CONTROL

1. CONDITION OF STARTING THE DEFROST OPERATION

The defrost operation starts when the outdoor heat exchanger temperature sensor detects the temperature lower than the values shown in Table 9.

(Table 9 : Condition of starting Defrost Operation)

	Compressor integrating operation :Less than 45min.	Compressor integrating operation :45min and over	
		Less than 6 min. *1 or 10min. *2	After 6 min. *1 or 10min. *2
AOU24RML AOU36RML	Does not operate		17.6°F(-8°C) *3 14°F (-10°C) *4

*1. It means contiguous operation time.
*2. Compressor stop time: Below 20min. → Select 6min.
Above 20min. → Select 10min.
*3. Outdoor temp. ≧ 30.2°F (-1°C)
*4. Outdoor temp. < 30.2°F (-1°C)

2. CONDITION OF THE DEFROST OPERATION COMPLETION

Defrost operation is released when the conditions become as shown in Table 10.

(Table 10 : Defrost Release Condition)

	Release Condition
AOU24RML AOU36RML	Outdoor heat exchanger temperature sensor value is higher than 53.6°F(12°C) or Compressor operation time has passed 15 minutes.

Defrost Flow Chart

The defrosting shall proceed by the integrating operation time and outdoor heat exchanger temperature as follows.

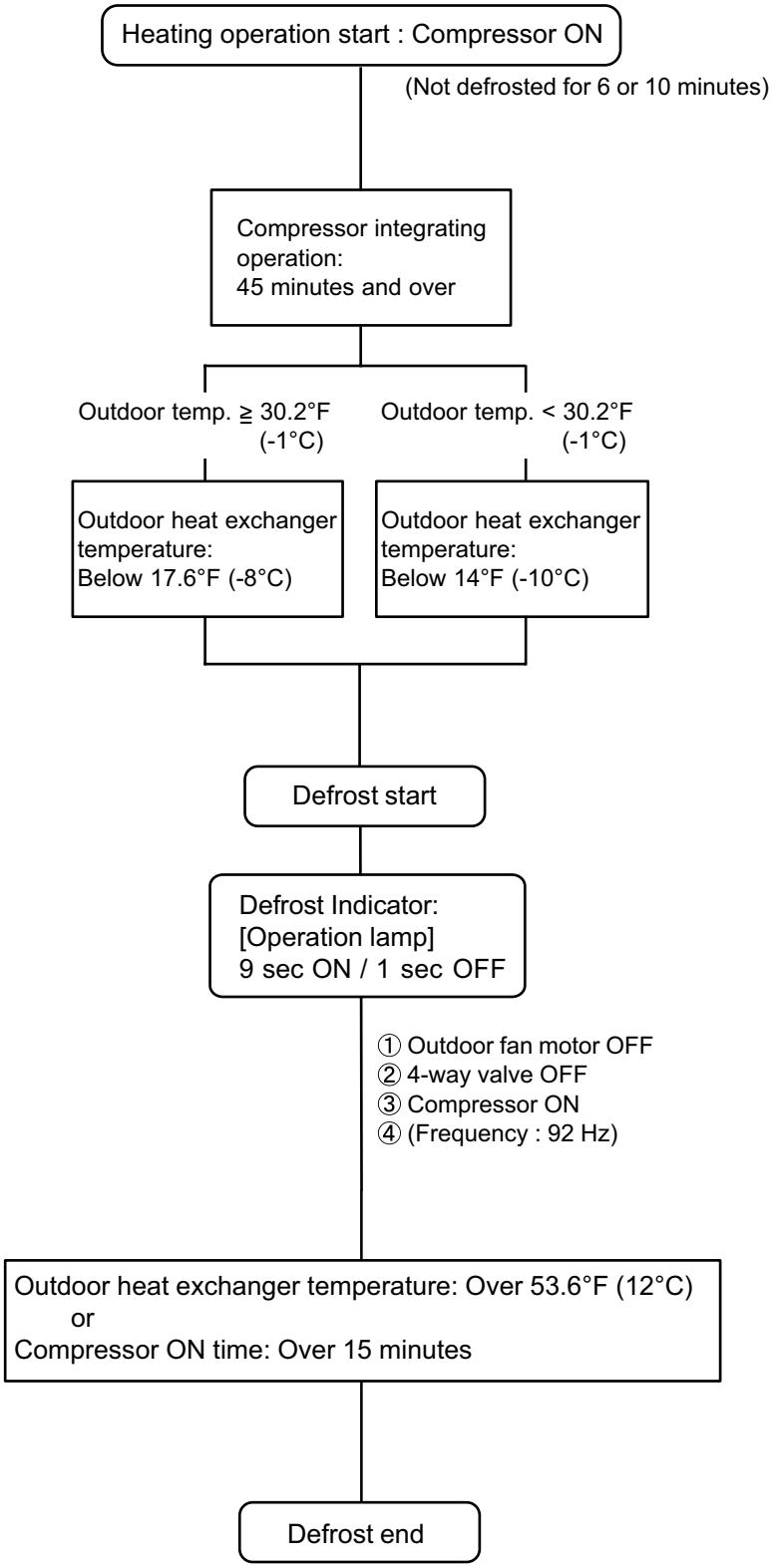

18. OFF DEFROST OPERATION CONTROL

When operation stops in the [Heating operation] mode, if frost is adhered to the outdoor unit heat exchanger, the defrost operation will proceed automatically. In this time, if indoor unit operation lamp flashes slowly (7 sec ON / 2 sec OFF), the outdoor unit will allow the heat exchanger to defrost, and then stop.

(1) OFF DEFROST END CONDITION

	Release Condition
AOU24RML	Outdoor heat exchanger temperature sensor value is higher than 54°F(12°C) or Compressor operation time has passed 15 minutes.
AOU36RML	Outdoor heat exchanger temperature sensor value is higher than 54°F(12°C) or Compressor operation time has passed 15 minutes.

(2) OFF Defrost Flow Chart

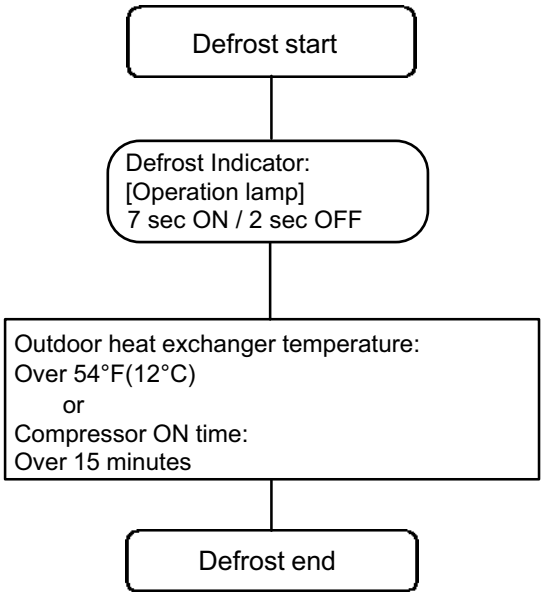

19. VARIOUS PROTECTIONS

(1). DISCHARGE GAS TEMPERATURE OVERRISE PREVENSION CONTROL

The discharge gas thermosensor (discharge thermistor : Outdoor side) will detect discharge gas temperature.

When the discharge temperature becomes higher than Temperature Ⅰ,the compressor frequency is decreased 20 Hz, and it continues to decrease the frequency for 20 Hz every 120 seconds until the temperature becomes lower than Temperature Ⅰ.

When the discharge temperature becomes lower than Temperature Ⅱ,the control of the control of the compressor frequency is released.

When the discharge temperature becomes higher than Temperature Ⅲ,the compressor is stopped and the indoor unit LED starts blinking.

(Table 11 : Discharge Temperature Over Rise Prevension Control / Release Temperature)

	Temperature Ⅰ	Temperature Ⅱ	Temperature Ⅲ
AOU24/36RML	230°F(110°C)	212°F(100°C)	239°F(115°C)

(2). CURRENT RELEASE CONTROL

The compressor frequency is controlled so that the outdoor unit input current does not exceeds the current limit velue that was set up with the outdoor temperature.
The compressor frequency returns to the designated frequency of the indoor unit at the time when the frequency becomes lower than the release value.

3. ANTI-FREEZING CONTROL (Cooling mode)

The compressor frequency decreases on cooling mode when the indoor heat exchanger temperature sensor detects the temperature lower than 37.4°F (3°C).
Then, the anti-freezing control is released when it becomes higher than 42.8°F (6°C).

(Fig 7 : Anti-freezing Protection Operation / Release Temperature)

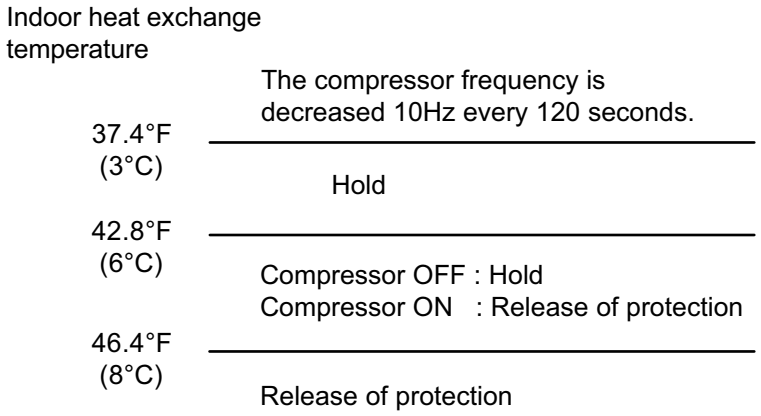

4. COOLING PRESSURE OVER RISE PROTECTION

When the outdoor unit heat exchange sensor temperature rises to 158.9°F (70.5°C) or greater, the compressor is stopped and error display is indicated.

5. HIGH TEMPERATURE RELEASE CONTROL (HEATING MODE)

On heating mode, the compressor frequency is controlled as following based on the detection value of the indoor heat exchanger temperature sensor.

(Fig 8 : Heating Overload Protection Control)

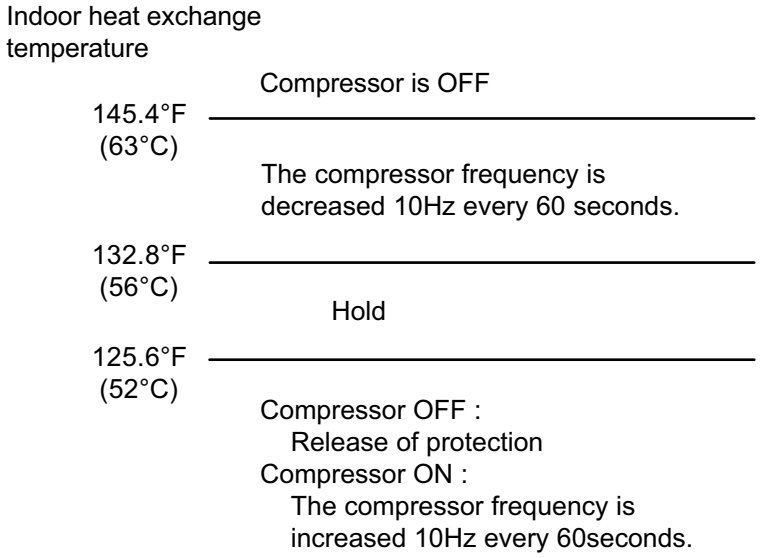

Refrigerant
R410A

WALL MOUNTED type
INVERTER (MULTI)

2 . TROUBLE SHOOTING

2. TROUBLESHOOTING

2-1 ERROR DISPLAY

2-1-1 INDOOR UNIT DISPLAY

1. ERROR DISPLAY

Please refer the blinking pattern as follows.

Error Contents	Operation (RED)	Timer (GREEN)	Air Clean or Quiet (ORANGE)	Coil Dry (ORANGE)	Trouble shooting
Communication error (Serial reverse transfer error)	OFF	2 times blink	OFF	OFF	2
	OFF	3 times blink	OFF	OFF	
Outdoor communication signal error (Forward transfer signal error)	OFF	4 times blink	OFF	OFF	11
Communication error (indoor unit ← remote control)	OFF	8 times blink	OFF	OFF	1
Room temperature thermistor error	2 times blink	2 times blink	OFF	OFF	3
Indoor heat exchanger temperature thermistor error	2 times blink	3 times blink	OFF	OFF	4
Outdoor discharge pipe temperature thermistor error	3 times blink	2 times blink	OFF	OFF	8
Outdoor heat exchanger temperature thermistor error	3 times blink	3 times blink	OFF	OFF	5
Outdoor temperature thermistor error	3 times blink	4 times blink	OFF	OFF	7
Heat sink temperature thermistor error	3 times blink	7 times blink	OFF	OFF	19
Compressor temperature thermistor error	3 times blink	8 times blink	OFF	OFF	12
2-way valve temperature thermistor error	3 times blink	OFF	2 times blink	OFF	21
3-way valve temperature thermistor error	3 times blink	OFF	3 times blink	OFF	22
Forced auto switch error	4 times blink	2 times blink	OFF	OFF	25
Power supply frequency detection error	4 times blink	4 times blink	OFF	OFF	26
VDD permanence stop protection (Electric air clean)	4 times blink	7 times blink	OFF	OFF	27
Reverse-VDD permanence stop protection (Electric air clean power supply circuit abnormal)	4 times blink	8 times blink	OFF	OFF	28
IPM error	5 times blink	2 times blink	OFF	OFF	14
CT error	5 times blink	3 times blink	OFF	OFF	15
Compressor rotor location cannot detect (permanent stop)	5 times blink	5 times blink	OFF	OFF	17
Outdoor unit fan motor error	5 times blink	6 times blink	OFF	OFF	18
Connected indoor unit error	5 times blink	7 times blink	OFF	OFF	23
Main CPU - sub CPU communication error	5 times blink	8 times blink	OFF	OFF	24

Error Contents	Operation (RED)	Timer (GREEN)	Air Clean or Quiet (ORANGE)	Coil Dry (ORANGE)	Trouble shooting
Indoor fan motor lock error	6 times blink	2 times blink	OFF	OFF	10
Indoor fan motor speed error	6 times blink	3 times blink	OFF	OFF	
Pressure switch error	7 times blink	6 times blink	OFF	OFF	13
Active filter module (AFM) error	8 times blink	2 times blink	OFF	OFF	16
Indoor EEPROM abnormal (Model No.)	Continuous blink	Continuous blink	Continuous blink	Continuous blink	9

2. ERROR DISPLAY METHOD

・LED Continuous Blink : 0.1sec ON / 0.1sec OFF blinking

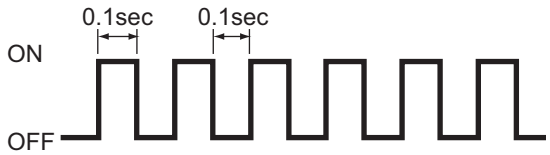

・LED Blink (2 to 8 times) : 0.5sec ON / 0.5sec OFF blinking

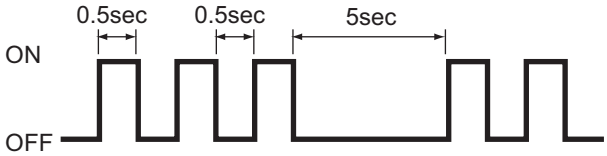

2-1-2 OUTDOOR UNIT DISPLAY

1. ERROR DISPLAY

Error Contents	LED				Trouble shooting
	A	B	C	D	
Outdoor communication signal error (Forward transfer signal error)	1 times blink	OFF	OFF	OFF	11
	OFF	1 times blink	OFF	OFF	
	OFF	OFF	1 times blink	OFF	
	OFF	OFF	OFF	1 times blink	
Outdoor discharge pipe temperature thermistor error	2 times blink	OFF	OFF	OFF	8
Outdoor heat exchanger temperature thermistor error	3 times blink	OFF	OFF	OFF	5
Outdoor temperature thermistor error	4 times blink	OFF	OFF	OFF	7
2-way valve temperature thermistor A error	5 times blink	OFF	OFF	OFF	21
2-way valve temperature thermistor B error	OFF	5 times blink	OFF	OFF	
2-way valve temperature thermistor C error	OFF	OFF	5 times blink	OFF	
2-way valve temperature thermistor D error	OFF	OFF	OFF	5 times blink	
3-way valve temperature thermistor A error	6 times blink	OFF	OFF	OFF	22
3-way valve temperature thermistor B error	OFF	6 times blink	OFF	OFF	
3-way valve temperature thermistor C error	OFF	OFF	6 times blink	OFF	
3-way valve temperature thermistor D error	OFF	OFF	OFF	6 times blink	
Compressor temperature thermistor error	7 times blink	OFF	OFF	OFF	12
Heat sink temperature thermistor error	8 times blink	OFF	OFF	OFF	19
Pressure switch 1 error	9 times blink	OFF	OFF	OFF	13
Pressure switch 2 error	10 times blink	OFF	OFF	OFF	
Connected indoor unit error	11 times blink	OFF	OFF	OFF	25
IPM error	12 times blink	OFF	OFF	OFF	14
Compressor rotor location cannot detect (permanent stop)	13 times blink	OFF	OFF	OFF	17
Compressor Start-up error (permanent stop)	14 times blink	OFF	OFF	OFF	20
Outdoor unit fan motor error	15 times blink	OFF	OFF	OFF	18
Main CPU - sub CPU communication error	17 times blink	OFF	OFF	OFF	26

2. ERROR DISPLAY METHOD

Outdoor LED Blink (1 to 18 times) 0.5sec ON / 0.5sec OFF blinking

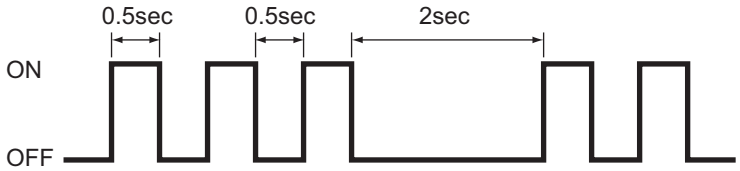

3. NORMAL OPERATION DISPLAY

Operation	LED A	LED B	LED C	LED D
Normal operation	Continuously lighting	OFF	OFF	OFF
Protected operation	5sec ON / 1sec OFF			

2-1-3 WIRED REMOTE CONTROLLER DISPLAY (optional parts)

1. SELF - DIAGNOSIS

When the error indication "E:EE" is displayed, inspection of the air conditioning system is necessary. Please consult authoilzed servise personnel.

Run [Self-Diagnosis] if [E:EE] flashes on the clock display of the remote controller.

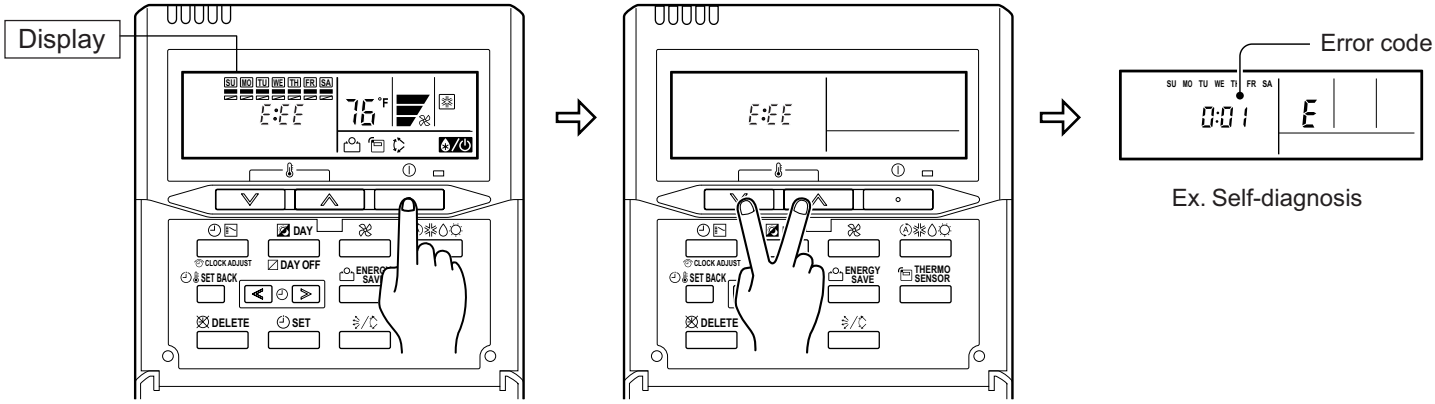

1. Stop the air conditioner operation.
2. Press the SET TEMPERATURE buttons ⋁ and ⋀ simultaneously for 5 seconds or more to start the self-diagnosis.
3. Press the SET TEMPERATURE buttons ⋁ and ⋀ simultaneously for 5 seconds or more or there is no key input for 20 seconds to stop the self-diagnosis.

Error code	Error contents	Trouble shooting
E:00	Communication error (indoor unit ← remote control)	1
E:01	Communication error (Serial reverse transfer error)	2
E:02	Room temperature thermistor open	3
E:03	Room temperature thermistor short-circuited	
E:04	Indoor heat exchanger temperature thermistor open	4
E:05	Indoor heat exchanger temperature thermistor short-circuited	
E:06	Outdoor heat exchanger temperature thermistor error	5
E:07	Outdoor heat exchanger temperature thermistor short-circuited	
E:08	Power supply frequency detection error	26
E:09	Outdoor temperature thermistor open	7
E:0b	Outdoor temperature thermistor short-circuited	
E:0C	Outdoor discharge pipe temperature thermistor open	8
E:0d	Outdoor discharge pipe temperature thermistor short-circuited	
E:0E	Heat sink temperature thermistor error	19
E:11	Indoor EEPROM abnormal (Model No.)	9
E:12	Indoor fan motor abnormal	10
E:13	Outdoor communication signal error (Forward transfer signal error)	11
E:15	Compressor temperature thermistor error	12
E:16	Pressure switch error	13
E:17	IPM error	14
E:18	CT error	15
E:19	Active Filter Module (AFM) error	16
E:1A	Compressor rotor location cannot detect	17
E:1b	Outdoor unit fan motor error	18
E:1C	Main CPU - sub CPU communication error	24
E:1d	2-way valve temperature thermistor error	21
E:1E	3-way valve temperature thermistor error	22
E:1F	Connected indoor unit error	23

2. ERROR CODE HISTORY DISPLAY

Up to 16 memorized error codes may be displayed for the indoor unit connected to the remote controller.

1. Stop the air conditioner operation.

2. Press the SET TEMPERATURE buttons ⋁, ⋀ and the START/STOP button ⏻ simultaneously for 5 seconds or more to start the self-diagnosis.

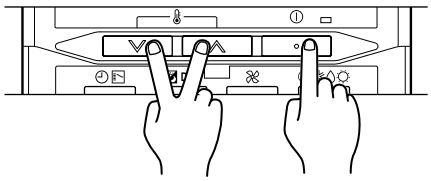

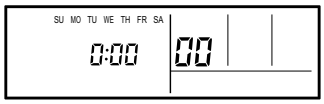

3. Press the START/STOP button.

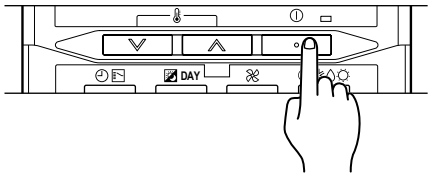

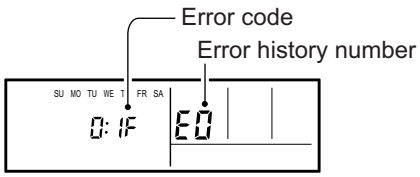

4. Press the SET TEMPERATURE button to select the error history number.

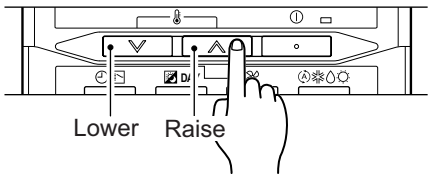

0 ↔ 1 ↔ 2 ↔ 3 ↔ 4 ↔ 5 ↔ 6 ↔ 7
F ↔ E ↔ d ↔ c ↔ b ↔ A ↔ 9 ↔ 8

5. Press the SET TEMPERATURE buttons ⋁, ⋀ and START/STOP button ⏻ simultaneously for 5 seconds or more or there is no key input for 20 seconds to stop the display.

2-2 TROUBLE SHOOTING WITH ERROR CODE

Trouble shooting 1 **INDOOR UNIT Error Method:** **Communication Error** **(Indoor unit ⟵ Remote control)**	**Indicate or Display:** **Indoor Unit : Operation LED: OFF , Timer LED: 8 Times Blink** **Outdoor Unit : No indication** **ERROR CODE : E : 00**
Detective Actuators: Indoor unit controller PCB circuit Wired Remote Control	**Detective details:** When the indoor unit cannot receive the signal from Wired Remote more than 10seconds after power ON, or the indoor unit cannot receive the signal more than 1minute during normal operation.

Forecast of Cause:

1. Terminal connection abnormal 2. Wired Remote Control failure 3. Controller PCB failure

Check Point 1 : Check the connection of terminal

After turning off the power, check & correct the followings.

- Check the connection of terminal between remote control and Indoor unit, and check if there is a disconnection of the cable.

OK

Check Point 2 : Check Remote Control and Controller PCB

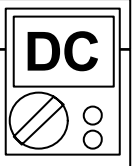

- Check Voltage at CN10 of Controller PCB. (Power supply to Remote Control)
  >> If it is DC12V, Remote Control is failure. (Controller PCB is normal) >> Replace Remote Control
  >> If it is DC 0V, Controller PCB is failure. (Check Remote Control once again) >> Replace Controller PCB

▶ **Upon correcting the removed connector or mis-wiring, reset the power.**

Trouble shooting 2 **OUTDOOR UNIT Error Method:** **Communication Error** **(Serial Reverse Transfer Error)**	**Indicate or Display:** **Indoor Unit : Operation LED: OFF,** **Timer LED : 2 Times Blink (At operation start up)** **Timer LED : 3 Times Blink (During operation)** **Outdoor Unit : No indication** **ERROR CODE : E : 01**
Detective Actuators: Outdoor Unit Main PCB Circuit Active Filter Module	**Detective details:** When the indoor unit cannot receive the serial signal from Outdoor unit more than 10seconds.

Forecast of Cause:

1. Connection failure 2. External cause 3. Main PCB failure 4. Active Filter Module failure

Check Point 1-1 : Reset the power and operate

・Does Error indication show again?

NO → **Check Point 1-2: Check external cause such as noise**

・Check the complete insulation of the grounding.

・Check if there is any equipment that causes harmonic wave near the power cable (Neon light bulb or any electronic equipment which causes harmonic wave).

YES ↓

Check Point 2 : Check Connection

・Check any loose or removed connection line of Indoor unit and Outdoor unit.

>> If there is an abnormal condition, correct it by referring to Installation Manual or Data & Technical Manual.

・Check connection between Outdoor Unit Main PCB and Filter PCB.
(If there is loose connector or open cable)

OK ↓

Check Point 3 : Check the voltage of power supply

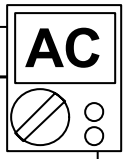

・Check the voltage of power supply

>> Check if AC208 - 230V appears at Outdoor Unit Terminal L - N.

OK ↓

Check Point 4 : Check Serial Signal (Reverse Transfer Signal)

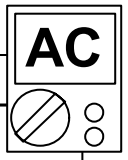

・Check Serial Signal (Reverse Transfer Signal)

>> Check if Indicated value swings between AC70V and AC130V at Outdoor Unit Terminal N - 3.

>> If it is abnormal, Check Active Filter Module. (PARTS INFORMATION 3)

>>If Active Filter Module is abnormal, replace it.

>>If Active Filter Module is normal, replace Main PCB.

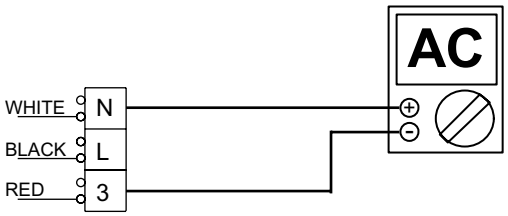

Trouble shooting 3 **INDOOR UNIT Error Method:** **Room Temperature Thermistor Error**	**Indicate or Display:** **Indoor Unit : Operation LED: 2 Times Blink , Timer LED : 2 Times Blink** **Outdoor Unit : No indication** **ERROR CODE : E : 02 / 03**
Detective Actuators: Indoor Unit Controller PCB Circuit Room Temperature Thermistor	**Detective details:** When Room Temperature Thermistor open or short-circuit is detected at power ON.

Forecast of Cause :

1. Connector connection failure 2.Thermistor failure 3. Controller PCB failure

Check Point 1 : Check connection of Connector

- Check if connector is removed.
- Check erroneous connection.
- Check if thermistor cable is open.

>>Upon correcting the removed connector or mis-wiring, reset the power.

OK

Check Point 2 : Remove connector and check Thermistor resistance value

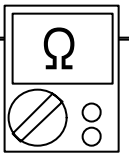

Thermistor Characteristics (Approx. value)

Temperature	32°F (0°C)	41°F (5°C)	50°F (10°C)	59°F (15°C)	68°F (20°C)	77°F (25°C)	86°F (30°C)	95°F (35°C)
Resistance Value (kΩ)	33.6	25.9	20.2	15.8	12.5	10.0	8.04	6.51

Temperature	104°F (40°C)	113°F (45°C)	122°F (50°C)
Resistance Value (kΩ)	5.30	4.35	3.59

▶ **If Thermistor is either open or shorted, replace it and reset the power.**

OK

Check Point 3 : Check voltage of Controller PCB (DC5.0V)

Make sure circuit diagram of indoor unit and check terminal voltage at Thermistor (DC5.0V)

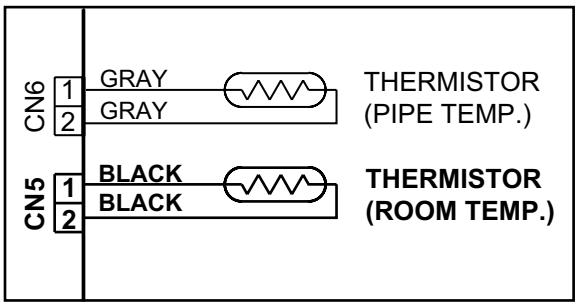

▶ **If the voltage does not appear, replace Controller PCB.**

Trouble shooting 4 **INDOOR UNIT Error Method:** **Indoor Heat Exchanger Temperature Thermistor Error**	**Indicate or Display:** **Indoor Unit : Operation LED: 2 Times Blink , Timer LED : 3 Times Blink** **Outdoor Unit : No indication** **ERROR CODE : E : 04 / 05**
Detective Actuators: Indoor Unit Controller PCB Circuit Heat Exchanger Temperature Thermistor	**Detective details:** When Heat Exchanger Temperature Thermistor open or short-circuit is detected at power ON.

Forecast of Cause :

1. Connector connection failure 2.Thermistor failure 3. Controller PCB failure

Check Point 1 : Check connection of Connector

- Check if connector is removed.
- Check erroneous connection.
- Check if thermistor cable is open.

>>Upon correcting the removed connector or mis-wiring, reset the power.

OK

Check Point 2 : Remove connector and check Thermistor resistance value

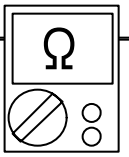

Thermistor Characteristics (Approx. value)

Temperature	32°F (0°C)	41°F (5°C)	50°F (10°C)	59°F (15°C)	68°F (20°C)	77°F (25°C)	86°F (30°C)	95°F (35°C)
Resistance Value (kΩ)	176	134	103	80.3	62.9	49.7	39.6	31.7

Temperature	104°F (40°C)	113°F (45°C)	122°F (50°C)
Resistance Value (kΩ)	25.6	20.8	17.1

▶ **If Thermistor is either open or shorted, replace it and reset the power.**

OK

Check Point 3 : Check voltage of Controller PCB (DC5.0V)

Make sure circuit diagram of indoor unit and check terminal voltage at Thermistor (DC5.0V)

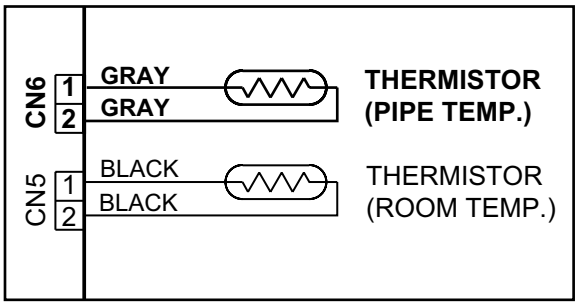

▶ **If the voltage does not appear, replace Controller PCB.**

Trouble shooting 5 **OUTDOOR UNIT Error Method:** **Outdoor Heat Exchanger Temperature Thermistor Error**	**Indicate or Display:** **Indoor Unit : Operation LED : 3 Times Blink , Timer LED : 3 Times Blink** **Outdoor Unit : LED A : 3 times blink** **ERROR CODE : E : 06 / 07**
Detective Actuators: Outdoor Unit Main PCB Circuit Heat Exchanger Temperature Thermistor	**Detective details:** When Heat Exchanger Temperature Thermistor open or short-circuit is detected at power ON or while running the compressor.

Forecast of Cause :

1. Connector connection failure 2.Thermistor failure 3. Main PCB failure

Check Point 1 : Check connection of Connector

- Check if connector is removed.
- Check erroneous connection.
- Check if thermistor cable is open.

>>Upon correcting the removed connector or mis-wiring, reset the power.

OK

Check Point 2 : Remove connector and check Thermistor resistance value

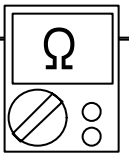

Thermistor Characteristics (Approx. value)

Temperature	14°F (-10°C)	23°F (-5°C)	32°F (0°C)	41°F (5°C)	50°F (10°C)	59°F (15°C)	68°F (20°C)	77°F (25°C)	86°F (30°C)
Resistance Value (kΩ)	27.5	20.9	16.1	12.4	9.73	7.67	6.10	4.89	3.95

▶ **If Thermistor is either open or shorted, replace it and reset the power.**

OK

Check Point 3 : Check voltage of Main PCB (DC5.0V)

Make sure circuit diagram of outdoor unit and check terminal voltage at Thermistor (DC5.0V)

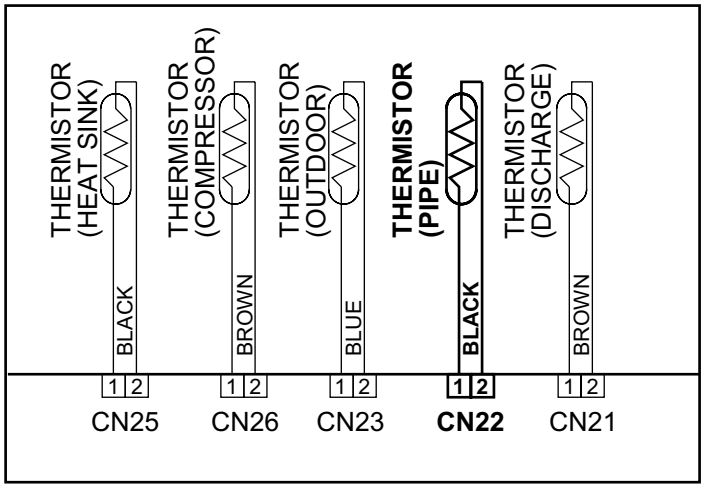

▶ **If the voltage does not appear, replace Main PCB.**

Trouble shooting 7 **OUTDOOR UNIT Error Method:** **Outdoor Temperature Thermistor Error**	**Indicate or Display:** **Indoor Unit : Operation LED : 3 Times Blink , Timer LED : 4 Times Blink** **Outdoor Unit : LED A : 4 times blink** **ERROR CODE : E : 0A / 0b**

Detective Actuators:	**Detective details:**
Outdoor Unit Main PCB Circuit Outdoor Temperature Thermistor	When Outdoor Temperature Thermistor open or short-circuit is detected at power ON or while running the compressor.

Forecast of Cause :

1. Connector connection failure 2.Thermistor failure 3. Main PCB failure

Check Point 1 : Check connection of Connector

- Check if connector is removed.
- Check erroneous connection.
- Check if thermistor cable is open.

>>Upon correcting the removed connector or mis-wiring, reset the power.

OK

Check Point 2 : Remove connector and check Thermistor resistance value

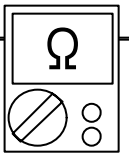

Thermistor Characteristics (Approx. value)

Temperature	- 4°F (-20°C)	14°F (-10°C)	23°F (-5°C)	32°F (0°C)	41°F (5°C)	50°F (10°C)	59°F (15°C)	68°F (20°C)
Resistance Value (kΩ)	115	62.3	46.6	35.2	26.9	20.7	16.1	12.6

Temperature	86°F (30°C)	104°F (40°C)	122°F (50°C)	140°F (60°C)	158°F (70°C)
Resistance Value (kΩ)	7.97	5.18	3.45	2.36	1.65

▶ **If Thermistor is either open or shorted, replace it and reset the power.**

OK

Check Point 3 : Check voltage of Main PCB (DC5.0V)

Make sure circuit diagram of outdoor unit and check terminal voltage at Thermistor (DC5.0V)

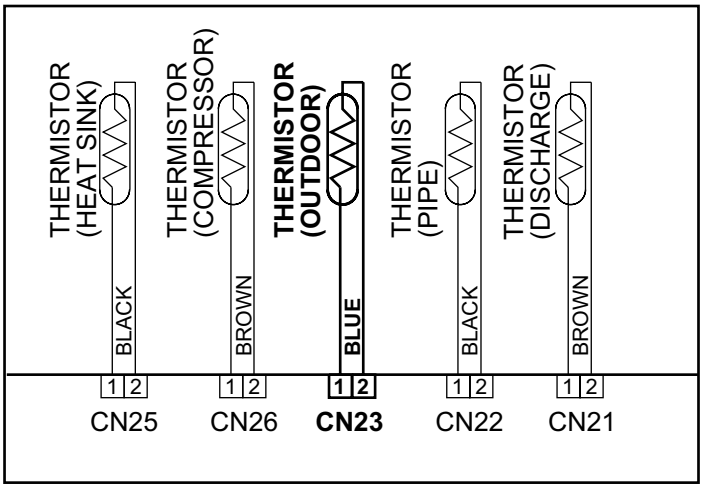

▶ **If the voltage does not appear, replace Main PCB.**

Trouble shooting 8 **OUTDOOR UNIT Error Method:** **Outdoor Discharge Pipe Temperature Thermistor Error**	**Indicate or Display:** **Indoor Unit : Operation LED : 3 Times Blink , Timer LED : 2 Times Blink** **Outdoor Unit : LED A : 2 times blink** **ERROR CODE : E : 0C / 0d**

Detective Actuators:	**Detective details:**
Outdoor Unit Main PCB Circuit Discharge Pipe Temperature Thermistor	When Discharge Pipe Temperature Thermistor open or short-circuit is detected at power ON or while running the compressor.

Forecast of Cause :

1. Connector connection failure 2.Thermistor failure 3. Main PCB failure

Check Point 1 : Check connection of Connector

- Check if connector is removed.
- Check erroneous connection.
- Check if thermistor cable is open.

>>Upon correcting the removed connector or mis-wiring, reset the power.

OK

Check Point 2 : Remove connector and check Thermistor resistance value

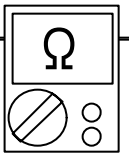

Thermistor Characteristics (Approx. value)

Temperature	32°F (0°C)	41°F (5°C)	50°F (10°C)	59°F (15°C)	68°F (20°C)	86°F (30°C)	104°F (40°C)	122°F (50°C)	140°F (60°C)
Resistance Value (kΩ)	176	135	105	81.8	64.5	41.1	26.9	18.1	12.5

Temperature	158°F (70°C)	176°F (80°C)	194°F (90°C)	212°F (100°C)	248°F (120°C)	284°F (140°C)	320°F (160°C)	356°F (180°C)
Resistance Value (kΩ)	8.78	6.31	4.61	3.43	1.98	1.21	0.77	0.51

▶ **If Thermistor is either open or shorted, replace it and reset the power.**

OK

Check Point 3 : Check voltage of Main PCB (DC5.0V)

Make sure circuit diagram of outdoor unit and check terminal voltage at Thermistor (DC5.0V)

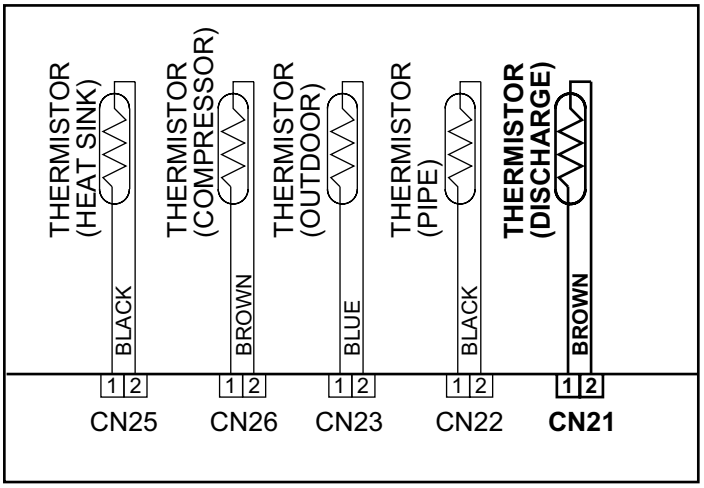

▶ **If the voltage does not appear, replace Main PCB.**

Trouble shooting 9 **INDOOR UNIT Error Method:** **Indoor EEPROM abnormal (Model No.)**	**Indicate or Display:** **Indoor Unit : Operation / Timer / Air Clean(Quiet) / Coil Dry : Continuous blink** **Outdoor Unit : No indication** **ERROR CODE : E : 11**

Detective Actuators:	**Detective details:**
Indoor Unit Controller PCB circuit	When the model information being read from EEPROM has an apparent error.

Forecast of Cause:

1. External cause 2. Defective connection of electric components 3. Controller PCB failure

Check Point 1-1 : Reset Power Supply and operate

・Does Error indication show again?

NO → **Check Point 1-2 :**
Check external cause at Indoor and Outdoor (Voltage drop or Noise)

・Instant drop : Check if there is a large load electric apparatus in the same circuit.
・Momentary power failure : Check if there is a defective contact or leak current in the power supply circuit.
・Noise : Check if there is any equipment causing harmonic wave near electric line.(Neon bulb or electric equipment that may cause harmonic wave)
Check the complete insulation of grounding.

YES ↓

Check Point 2 :
Check Indoor Unit electric components

・Check all connectors.
(loose connector or incorrect wiring)
・Check any shortage or corrosion on PCB.

↓

Check Point 3 : Replace Controller PCB

▶ **Change Controller PCB.**

Note : EEPROM

EEPROM(Electronically Erasable and Programmable Read Only Memory) is a non-volatile memory which keeps memorized information even if power is turned off. It can change the contents electronically.
To change the contents, it uses higher voltage than normal, and it can not change a partial contents. (Rewriting shall be done upon erasing the all contents.)
There is a limit in a number of rewriting.

Trouble shooting 10 **INDOOR UNIT Error Method:** **Indoor Fan Motor abnormal**	**Indicate or Display:** **Indoor Unit : Operation LED: 6 Times Blink** **Timer LED : 2 Times Blink (Fan motor lock error)** **Timer LED : 3 Times Blink (Fan motor speed error)** **Outdoor Unit : No indication** **ERROR CODE : E : 12**

Detective Actuators:	**Detective details:**
Indoor Unit Controller PCB Circuit Indoor Fan Motor	When the condition that actual frequency of Indoor Fan is below 1/3 of target frequency is continued more than 56 seconds. Or the condition of fan speed is 0rpm is continued more than 56 seconds.

Forecast of Cause:

1. Fan rotation failure 2. Motor protection by surrounding temperature rise 3. Control PCB failure

Check Point 1 : Check rotation of Fan

・Rotate the fan by hand when operation is off.
(Check if fan is caught, dropped off or locked motor)
>>If Fan or Bearing is abnormal, replace it.

OK

Check Point 2 : Check ambient temp. around motor

・Check excessively high temperature around the motor.
(If there is any surrounding equipment that causes heat)
>>Upon the temperature coming down, restart operation.

OK

Check Point 3 : Replace Controller PCB

▶ **If Check Point 1,2 do not improve the symptom, change Controller PCB.**

Trouble shooting 11 **INDOOR UNIT Error Method:** **Outdoor Communication Signal Error (Forward Transfer Signal Error)**	**Indicate or Display:** **Indoor Unit : Operation LED : OFF , Timer LED : 4 Times Blink** **Outdoor Unit : LED A or B or C or D : 1 Times Blink** **ERROR CODE : E : 13**
Detective Actuators: Indoor Unit Controller PCB Circuit	**Detective details:** When the outdoor unit cannot receive the serial signal from Indoor unit more than 10seconds.

Forecast of Cause:

1. Connection failure 2. External cause 3. Controller PCB failure

Check Point 1-1 : Reset the power

- Does Error indication reappear?

NO → **Check Point 1-2: Check external cause such as noise**

- Check the complete insulation of the grounding.
- Check if there is any equipment that causes harmonic wave near the power cable (Neon light bulb or any electronic equipment which causes harmonic wave).

YES ↓

Check Point 2 : Check Connection

- Check any loose or removed connection line of Indoor unit and Outdoor unit.
  >> If there is an abnormal condition, correct it by referring to Installation Manual or Data & Technical Manual.
- Check connection between Indoor Unit Controller PCB and Filter PCB.
  (If there is loose connector or open cable)

OK ↓

Check Point 3 : Check the voltage of power supply

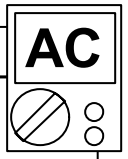

- Check the voltage of power supply
  >> Check if AC208 - 230V appears at Outdoor Unit Terminal L - N.

OK ↓

Check Point 4 : Check Serial Signal (Forward Transfer Signal)

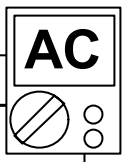

- Check Serial Signal (Forward Transfer Signal)
  >> Check if Indicated value swings between AC70V and AC130V at Outdoor Unit Terminal N - 3.
  >> If it is abnormal, Controller PCB is failure. >> Replace Controller PCB

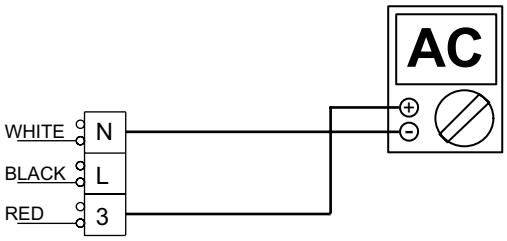

Trouble shooting 12 **OUTDOOR UNIT Error Method:** **Compressor Temperature Thermistor Error**	**Indicate or Display:** **Indoor Unit : Operation LED : 3 Times Blink , Timer LED : 8 Times Blink** **Outdoor Unit : LED A : 7 times blink** **ERROR CODE : E : 15**
Detective Actuators: Outdoor Unit Main PCB Circuit Compressor Temperature Thermistor	**Detective details:** When Compressor Temperature Thermistor open or short-circuit is detected at power ON or while running the compressor.

Forecast of Cause :

1. Connector connection failure 2. Thermistor failure 3. Main PCB failure

Check Point 1 : Check connection of Connector

- Check if connector is removed.
- Check erroneous connection.
- Check if thermistor cable is open.

>>Upon correcting the removed connector or mis-wiring, reset the power.

OK

Check Point 2 : Remove connector and check Thermistor resistance value

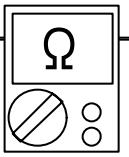

Thermistor Characteristics (Rough value)

Temperature	32°F (0°C)	41°F (5°C)	50°F (10°C)	59°F (15°C)	68°F (20°C)	86°F (30°C)	104°F (40°C)	122°F (50°C)	140°F (60°C)
Resistance Value (kΩ)	176	135	105	81.8	64.5	41.1	26.9	18.1	12.5

Temperature	158°F (70°C)	176°F (80°C)	194°F (90°C)	212°F (100°C)	248°F (120°C)	284°F (140°C)	320°F (160°C)	356°F (180°C)
Resistance Value (kΩ)	8.78	6.31	4.61	3.43	1.98	1.21	0.77	0.51

▶ **If Thermistor is either open or shorted, replace it and reset the power.**

OK

Check Point 3 : Check voltage of Main PCB (DC5.0V)

Make sure circuit diagram of outdoor unit and check terminal voltage at Thermistor (DC5.0V)

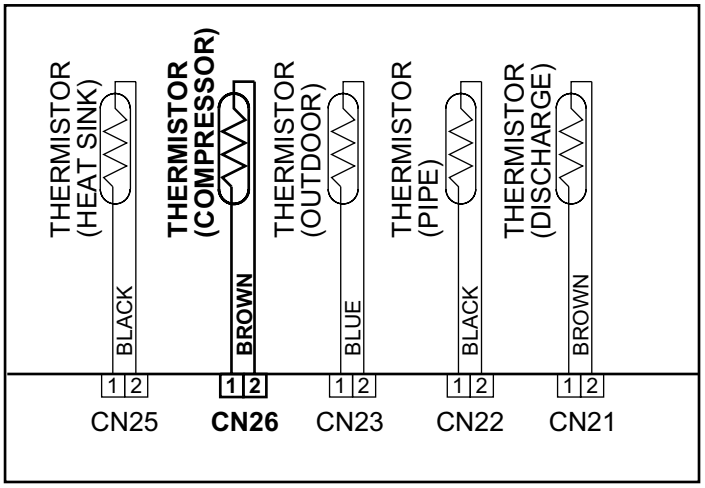

▶ **If the voltage does not appear, replace Main PCB.**

Trouble shooting 13 **OUTDOOR UNIT Error Method:** **Pressure Switch Error**	**Indicate or Display:** **Indoor Unit : Operation LED : 7 Times Blink , Timer LED : 6 Times Blink** **Outdoor Unit : LED A : 9 times blink (Pressure switch 1)** **10 times blink (Pressure switch 2)** **ERROR CODE : E : 15**
Detective Actuators: Outdoor Unit Main PCB Circuit Pressure Switch	**Detective details:** When pressure switch open is detected in 10 seconds after the power is turned on.

Forecast of Cause :

1. Connector connection failure 2. Pressure Switch failure 3. Main PCB failure

Check Point 1 : Reset Power Supply and operate

・Does abnormal LED indication show again?

NO → Check Point 3

YES ↓

Check Point 2 : Check voltage of Main PCB (DC5.0V)

・Make sure circuit diagram of outdoor unit and check terminal voltage at Pressure Switch. (DC5.0V)

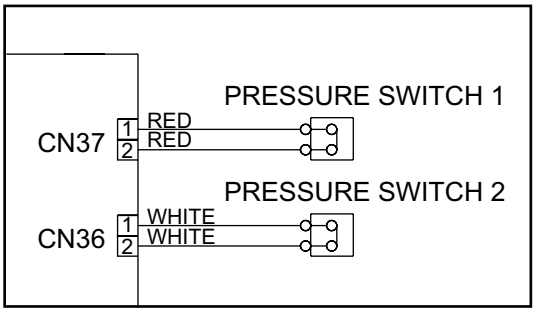

▶ **If the voltage does not appear, replace Main PCB.**

OK ↓

Check Point 3 : Check Pressure Switch

・Check if connector is loose or cable is open.
>> If no abnormal connection is found, replace Pressure Switch.

▶ **After replacing Pressure Switch, check operating condition and pressure in operation.**

Trouble shooting 14 **OUTDOOR UNIT Error Method:** **IPM error**	**Indicate or Display:** **Indoor Unit : Operation LED: 5 Times Blink , Timer LED : 2 Times Blink** **Outdoor Unit : LED A : 12 times blink** **ERROR CODE : E : 17**
Detective Actuators: Outdoor Unit Main PCB Circuit Compressor	**Detective details:** ① When more than normal operating current to IPM in Main PCB flows, the compressor stops. ② After the compressor restarts, if the same operation is repeated within 40sec, the compressor stops again. ③ If ① and ② repeats 5 times, the compressor stops permanently.

Forecast of Cause :

1. Defective connection of electric components
2. Outdoor Fan Operation failure
3. Outdoor Heat Exchanger clogged
4. Compressor failure
5. Main PCB failure

Check Point 1 : Check connections of Outdoor Unit Electrical Components

- Check if the terminal connection is loose.
- Check if connector is removed.
- Check erroneous connection.
- Check if cable is open.

>>Upon correcting the removed connector or mis-wiring, reset the power.

OK

Check Point 2 : Check Outdoor Fan, Heat Exchanger

- Is there anything obstructing the air distribution circuit?
- Is there any clogging of Outdoor Heat Exchanger?
- Is the Fan rotating by hand when operation is off ?
  >> If the Fan Motor is locked, replace it.
- Check Outdoor Fan Motor. (Refer to Trouble shooting 18)
  >> If the Fan Motor is failure, replace it.

OK

Check Point 3 : Check Compressor

- Check Compressor. **(PARTS INFORMATION 2)**

OK

Check Point 4 : Replace Main PCB

▶ **If Check Point 1, 2, 3 do not improve the symptom, change Main PCB.**

Trouble shooting 15 **OUTDOOR UNIT Error Method:** CT error	**Indicate or Display:** Indoor Unit : Operation LED: 5 Times Blink , Timer LED : 3 Times Blink Outdoor Unit : No indication ERROR CODE : E : 18
Detective Actuators: Outdoor Unit Main PCB Circuit Outdoor Unit Filter PCB Circuit (Input current sensor unit)	**Detective details:** When Input Current Sensor has detected lower than 0.5A while Inverter Compressor is operating at higher than 56Hz, after 1minute upon starting the Compressor. (Except during the defrost operation)

Forecast of Cause :

1. Defective connection of electric components 2. External cause 3. Filter PCB failure 4. Main PCB failure

Check Point 1-1 : Reset Power Supply and operate

・Does Error indication show again?

NO → **Check Point 1-2 : Check external cause at Indoor and Outdoor (Voltage drop or Noise)**

・Instant drop : Check if there is a large load electric apparatus in the same circuit.

・Momentary power failure : Check if there is a defective contact or leak current in the power supply circuit.

・Noise : Check if there is any equipment causing harmonic wave near electric line.(Neon bulb or electric equipment that may cause harmonic wave) Check the complete insulation of grounding.

YES ↓

Check Point 2 : Check connections of Outdoor Unit Electrical Components

・Check if the terminal connection is loose.
・Check if connector is removed.
・Check erroneous connection.
・Check if cable is open.

>>Upon correcting the removed connector or mis-wiring, reset the power.

OK ↓

Check Point 3 : Check Filter PCB and Main PCB

・Check DC voltage of CN1 (between 2 (Brown) and 3 (Red)) on Filter PCB.

>> After 40seconds upon starting the Compressor,
If it is higher than 0.2V, Main PCB is failure. (Filter PCB is normal) >> Replace Main PCB
>> If it is lower than 0.2V, Filter PCB is failure. >> Replace Filter PCB

▶ **If it does not improve the symptom, change Main PCB.**

Trouble shooting 16 **OUTDOOR UNIT Error Method:** **Active Filter Module (AFM) error**	**Indicate or Display:** **Indoor Unit : Operation LED : 8 Times Blink , Timer LED : 2 Times Blink** **Outdoor Unit : No indication** **ERROR CODE : E : 19**
Detective Actuators: Outdoor Unit Main PCB Circuit Active Filter Module	**Detective details:** When inverter input DC voltage is higher than 467V or lower than 237V. When a momentary power cut off occurred on low voltage.

Forecast of Cause :

1. External cause 2. Connector connection failure 3. Active Filter Module failure 4 . Main PCB failure

Check Point 1 : Check external cause at Indoor and Outdoor (Voltage drop or Noise)

- Instant drop : Check if there is a large load electric apparatus in the same circuit.
- Momentary power failure : Check if there is a defective contact or leak current in the power supply circuit.
- Noise : Check if there is any equipment causing harmonic wave near electric line. (Neon bulb or electric equipment that may cause harmonic wave) Check the complete insulation of grounding.

OK

Check Point 2 : Check connection of Connector

- Check if connector is removed.
- Check erroneous connection.
- Check if cable is open.

>>Upon correcting the removed connector or mis-wiring, reset the power.

OK

Check Point 3 : Check Active Filter Module

- Check Active Filter Module. **(PARTS INFORMATION 3)**

>>If Active Filter Module is abnormal, replace it.

OK

Check Point 4 : Replace Main PCB

▶ **If Check Point 1, 2 do not improve the symptom, change Main PCB.**

Trouble shooting 17 **OUTDOOR UNIT Error Method:** **Compressor rotor location cannot detect (Permanent Stop)**	**Indicate or Display:** **Indoor Unit : Operation LED : 5 Times Blink , Timer LED : 5 Times Blink** **Outdoor Unit : LED A : 13 times blink** **ERROR CODE : E : 1A**
Detective Actuators: Outdoor Unit Main PCB Circuit	**Detective details:** ① While running the compressor, if the detected rotor location is out of phase with actual rotor location more than 90 degrees, the compressor stops. ② After the compressor restarts, if the same operation is repeated within 40sec, the compressor stops again. ③ If ① and ② repeats 5 times, the compressor stops permanently.

Forecast of Cause :

1. Defective connection of electric components 2. Main PCB failure

Check Point 1 : Check connection of around the Compressor components

For Compressor Terminal, Main PCB

- Check if connector is removed.
- Check erroneous connection.
- Check if cable is open.
  (Refer to PARTS INFORMATION 2)

>>Upon correcting the removed connector or mis-wiring, reset the power.

OK

Check Point 2 : Replace Main PCB

▶ **If Check Point 1 do not improve the symptom, change Main PCB.**

Trouble shooting 18 **OUTDOOR UNIT Error Method:** **Outdoor Unit Fan Motor Error**	**Indicate or Display:** **Indoor Unit : Operation LED : 5 Times Blink , Timer LED : 6 Times Blink** **Outdoor Unit : LED A : 15 times blink** **ERROR CODE : E : 1b**
Detective Actuators: Outdoor Unit Main PCB Circuit Outdoor Fan Motor	**Detective details:** ① When outdoor fan rotation speed is less than 100rpm in 20 seconds after fan motor starts, fan motor stops. ② After fan motor restarts, if the same operation within 60sec is repeated 3 times in a row, compressor and fan motor stops. ③ If ① and ② repeats 5 times in a row, compressor and fan motor stops permanently.

Forecast of Cause:

1. Fan rotation failure 2. Motor protection by surrounding temperature rise 3. Main PCB failure

Check Point 1 : Check rotation of Fan

・Rotate the fan by hand when operation is off.
(Check if fan is caught, dropped off or locked motor)
>>If Fan or Bearing is abnormal, replace it.

OK

Check Point 2 : Check ambient temp. around motor

・Check excessively high temperature around the motor.
(If there is any surrounding equipment that causes heat)
>>Upon the temperature coming down, restart operation.

OK

Check Point 3 : Check Output Voltage of Main PCB

・Check outdoor unit circuit diagram and the voltage.
(Measure at Main PCB side connector)

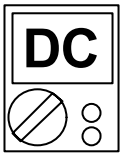

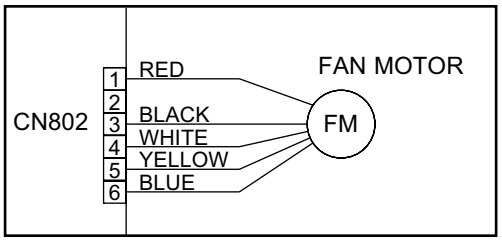

Read wire	DC voltage
Red - Black	150～380V
White - Black	15±1.5V

▶ **If the voltage is not correct, replace Main PCB.**

Trouble shooting 19 **OUTDOOR UNIT Error Method:** **Heat Sink Temperature Thermistor Error**	**Indicate or Display:** **Indoor Unit : Operation LED : 3 Times Blink , Timer LED : 7 Times Blink** **Outdoor Unit : LED A : 8 times blink** **ERROR CODE : E : 0E**
Detective Actuators: Outdoor Unit Main PCB Circuit Heat Sink Temperature Thermistor	**Detective details:** When Heat Sink Temperature Thermistor open or short-circuit is detected at power ON or while running the compressor.

Forecast of Cause :

1. Connector connection failure 2.Thermistor failure 3. Main PCB failure

Check Point 1 : Check connection of Connector

- Check if connector is removed.
- Check erroneous connection.
- Check if thermistor cable is open.

>>Upon correcting the removed connector or mis-wiring, reset the power.

OK

Check Point 2 : Remove connector and check Thermistor resistance value

Thermistor Characteristics (Approx. value)

Temperature	32°F (0°C)	41°F (5°C)	50°F (10°C)	59°F (15°C)	68°F (20°C)	86°F (30°C)	104°F (40°C)	122°F (50°C)
Resistance Value (kΩ)	16.1	12.4	9.73	7.67	6.10	3.95	2.62	1.79

Temperature	140°F (60°C)	158°F (70°C)	176°F (80°C)	194°F (90°C)	212°F (100°C)	230°F (110°C)	248°F (120°C)
Resistance Value (kΩ)	1.25	0.89	0.65	0.48	0.36	0.27	0.21

▶ **If Thermistor is either open or shorted, replace it and reset the power.**

OK

Check Point 3 : Check voltage of Main PCB (DC5.0V)

Make sure circuit diagram of outdoor unit and check terminal voltage at Thermistor (DC5.0V)

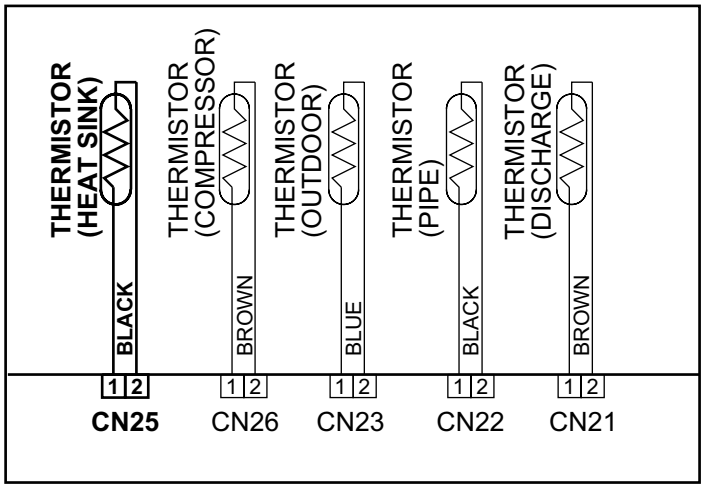

▶ **If the voltage does not appear, replace Main PCB.**

Trouble shooting 20 **OUTDOOR UNIT Error Method:** **Compressor Start-up error (Permanent Stop)**	**Indicate or Display:** **Indoor Unit : No indication** **Outdoor Unit : LED A : 14 times blink** **ERROR CODE : No indication**
Detective Actuators: Outdoor Unit Main PCB Circuit	**Detective details:** ① On start-up the compressor, when detected rotor position is out of phase with actual rotor position more than 90 degrees,the compressor stops. ② After the compressor restarts, if the same operation is repeated within 40sec, the compressor stops again. ③ If ① and ② repeats 5 times, the compressor stops permanently.

Forecast of Cause :

1. Defective connection of electric components 2. Main PCB failure

Check Point 1 : Check connection of around the Compressor components

For Compressor Terminal, Main PCB

- Check if connector is removed.
- Check erroneous connection.
- Check if cable is open.
  (Refer to PARTS INFORMATION 2)

>>Upon correcting the removed connector or mis-wiring, reset the power.

OK

Check Point 2 : Replace Main PCB

▶ **If Check Point 1 do not improve the symptom, replace Main PCB.**

Trouble shooting 21 **OUTDOOR UNIT Error Method:** **2-way valve Temperature Thermistor Error**	**Indicate or Display:** **Indoor Unit : Operation LED : 3 Times Blink , Timer LED : OFF** **Air Clean (Quiet) LED : 2 Times Blink** **Outdoor Unit : LED A : 5 Times Blink (2-way valve A)** **LED B : 5 Times Blink (2-way valve B)** **LED C : 5 Times Blink (2-way valve C)** **LED D : 5 Times Blink (2-way valve D)** **ERROR CODE : E : 1d**

Detective Actuators:	**Detective details:**
Outdoor Unit Main PCB Circuit 2-way valve Temperature Thermistor	When 2-way valve Temperature Thermistor open or short-circuit is detected at power ON or while running the compressor.

Forecast of Cause :

1. Connector connection failure 2.Thermistor failure 3. Main PCB failure

Check Point 1 : Check connection of Connector

- Check if connector is removed.
- Check erroneous connection.
- Check if thermistor cable is open.

>>Upon correcting the removed connector or mis-wiring, reset the power.

OK

Check Point 2 : Remove connector and check Thermistor resistance value

Thermistor Characteristics (Approx. value)

Temperature	14°F (-10°C)	23°F (-5°C)	32°F (0°C)	41°F (5°C)	50°F (10°C)	59°F (15°C)	68°F (20°C)	86°F (30°C)
Resistance Value (kΩ)	312	233	176	134	103	80.3	62.9	39.6

Temperature	104°F (40°C)	122°F (50°C)	140°F (60°C)	158°F (70°C)	176°F (80°C)	194°F (90°C)	212°F (100°C)
Resistance Value (kΩ)	25.6	17.1	11.6	8.12	5.78	4.19	3.09

▶ **If Thermistor is either open or shorted, replace it and reset the power.**

OK

Check Point 3 : Check voltage of Main PCB (DC5.0V)

Make sure circuit diagram of outdoor unit and check terminal voltage at Thermistor (DC5.0V)

AOU24RML

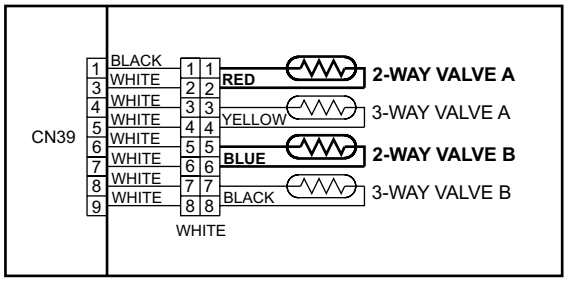

AOU36RML

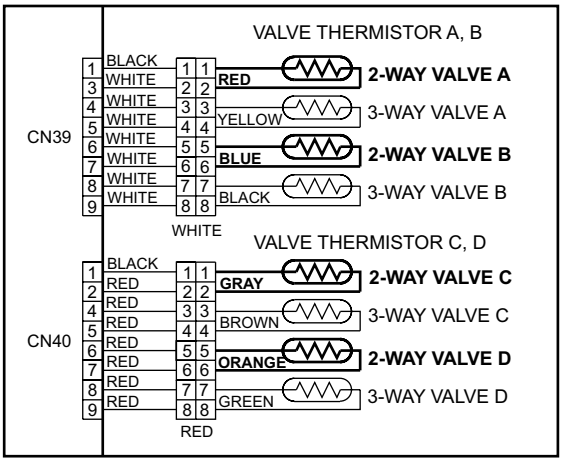

▶ **If the voltage does not appear, replace Main PCB.**

Trouble shooting 22 **OUTDOOR UNIT Error Method:** **3-way valve Temperature Thermistor Error**	**Indicate or Display:** **Indoor Unit : Operation LED : 3 Times Blink , Timer LED : OFF** **Air Clean (Quiet) LED : 3 Times Blink** **Outdoor Unit : LED A : 6 Times Blink (3-way valve A)** **LED B : 6 Times Blink (3-way valve B)** **LED C : 6 Times Blink (3-way valve C)** **LED D : 6 Times Blink (3-way valve D)** **ERROR CODE : E : 1E**

Detective Actuators:	**Detective details:**
Outdoor Unit Main PCB Circuit 3-way valve Temperature Thermistor	When 3-way valve Temperature Thermistor open or short-circuit is detected at power ON or while running the compressor.

Forecast of Cause :

1. Connector connection failure 2.Thermistor failure 3. Main PCB failure

Check Point 1 : Check connection of Connector

- Check if connector is removed.
- Check erroneous connection.
- Check if thermistor cable is open.

>>Upon correcting the removed connector or mis-wiring, reset the power.

OK

Check Point 2 : Remove connector and check Thermistor resistance value

Thermistor Characteristics (Approx. value)

Temperature	14°F (-10°C)	23°F (-5°C)	32°F (0°C)	41°F (5°C)	50°F (10°C)	59°F (15°C)	68°F (20°C)	86°F (30°C)
Resistance Value (kΩ)	312	233	176	134	103	80.3	62.9	39.6

Temperature	104°F (40°C)	122°F (50°C)	140°F (60°C)	158°F (70°C)	176°F (80°C)	194°F (90°C)	212°F (100°C)
Resistance Value (kΩ)	25.6	17.1	11.6	8.12	5.78	4.19	3.09

▶ **If Thermistor is either open or shorted, replace it and reset the power.**

OK

Check Point 3 : Check voltage of Main PCB (DC5.0V)

Make sure circuit diagram of outdoor unit and check terminal voltage at Thermistor (DC5.0V)

AOU24RML

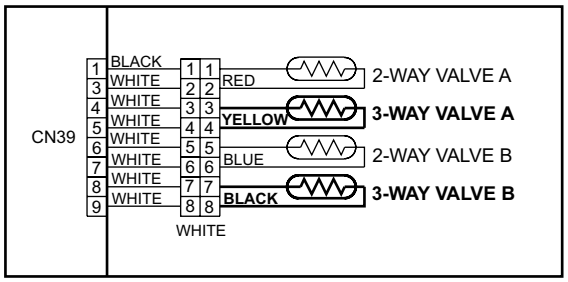

AOU36RML

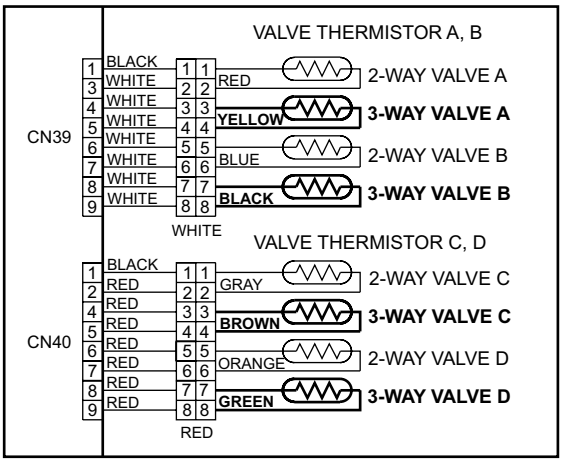

▶ **If the voltage does not appear, replace Main PCB.**

Trouble shooting 23 **OUTDOOR UNIT Error Method:** **Connected Indoor unit error**	**Indicate or Display:** **Indoor Unit : Operation LED : 5 Times Blink , Timer LED : 7 Times Blink** **Outdoor Unit : LED A : 11 times blink** **ERROR CODE : E : 1F**
Detective Actuators: Outdoor Unit Main PCB Circuit	**Detective details:** When the total capacity of the connected indoor units exceed the connectable range of the total capacity.

Forecast of Cause :

1. The selection of connected indoor unit is incorrect 2.Main PCB failure

Check Point 1 : Check the total capacity of indoor unit

· Check the total capacity of the connected indoor units.

>>If abnormal condition is found, correct it by referring to Installation Manual or Data & Technical Manual.

OK

Check Point 2 : Replace Main PCB

▶ **If Check Point 1 do not improve the symptom, change Main PCB.**

Trouble shooting 24 **OUTDOOR UNIT Error Method:** **Main CPU - Sub CPU communication error**	**Indicate or Display:** **Indoor Unit : Operation LED : 5 Times Blink , Timer LED : 8 Times Blink** **Outdoor Unit : LED A : 17 times blink** **ERROR CODE : E : 1C**
Detective Actuators: Outdoor Unit Main PCB Circuit	**Detective details:** When it cannot receive an effective signal for 10sec between the Main CPU and Sub CPU in outdoor unit.

Forecast of Cause :

1. Main PCB failure

Check Point 1 : Replace Main PCB

▶ **Change Main PCB.**

Trouble shooting 25 **INDOOR UNIT Error Method:** **Forced auto switch error**	**Indicate or Display:** **Indoor Unit : Operation LED : 4 Times Blink , Timer LED : 2 Times Blink** **Outdoor Unit : No indication** **ERROR CODE : No indication**
Detective Actuators: Indoor Unit Controller PCB Circuit Forced auto switch	**Detective details:** When the Forced auto switch becomes ON for 10 consecutive seconds.

Forecast of Cause :

1. Forced auto switch failure 2.Controller PCB failure

Check Point 1 : Check the Forced auto switch

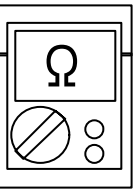

・Check if Forced auto switch is kept pressed.
・Check ON/OFF switching operation by using a meter.
>>If Forced auto switch is detective, replace it.

OK

Check Point 2 : Replace Controller PCB

▶ **If Check Point 1 do not improve the symptom, change Controller PCB.**

Trouble shooting 26 **INDOOR UNIT Error Method:** **Power supply frequency detection error**	**Indicate or Display:** **Indoor Unit : Operation LED : 4 Times Blink , Timer LED : 4 Times Blink** **Outdoor Unit : No indication** **ERROR CODE : E : 08**
Detective Actuators: Indoor Unit Controller PCB Circuit	**Detective details:** The power supply frequency cannot be recognized after 4sec of power ON.

Forecast of Cause :

1. Connection failure 2. External cause 3. Controller PCB failure

Check Point 1-1 : Reset the power and operate

・Does Error indication show again?

NO → **Check Point 1-2: Check external cause such as noise**

・Check the complete insulation of the grounding.

・Check if there is any equipment that causes harmonic wave near the power cable (Neon light bulb or any electronic equipment which causes harmonic wave).

YES ↓

Check Point 2 : Check Connection

・Check any loose or removed connection line of Indoor unit and Outdoor unit.

>> If there is an abnormal condition, correct it by referring to Installation Manual or Data & Technical Manual.

・Check connection between Outdoor Unit Main PCB and Filter PCB.
(If there is loose connector or open cable)

OK ↓

Check Point 3 : Check the voltage of power supply

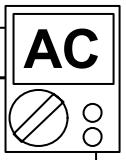

・Check the voltage of power supply

>> Check if AC208 - 230V appears at Outdoor Unit Terminal L - N.

OK ↓

Check Point 3 : Replace Controller PCB

▶ **If Check Point 1～3 do not improve the symptom, change Controller PCB.**

Trouble shooting 27 **INDOOR UNIT Error Method:** **VDD permanence stop protection (Electric air clean)**	**Indicate or Display:** **Indoor Unit : Operation LED : 4 Times Blink , Timer LED : 7 Times Blink** **Outdoor Unit : No indication** **ERROR CODE : No indication**
Detective Actuators: Electric air clean unit Indoor Unit Controller PCB Circuit	**Detective details:** When the air cleanness monitor trial protection operates 4 times.

Forecast of Cause :

1. Electric air clean unit failure 2. Controller PCB failure

Check Point 1 : Check the Electric air clean unit

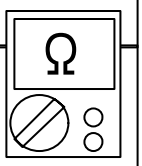

・Check the front panel is closed.
・Check the Micro switch in Electric air clean unit.
(Check ON/OFF switching operation by using a meter.)
>>If Micro switch is detective, replace Electric air clean unit.

OK

Check Point 2 : Replace Controller PCB

▶ **If Check Point 1 do not improve the symptom, change Controller PCB.**

Trouble shooting 28 **INDOOR UNIT Error Method:** **Reverse-VDD permanence stop protection (Electric air clean power supply circuit abnormal)**	**Indicate or Display:** **Indoor Unit : Operation LED : 4 Times Blink , Timer LED : 8 Times Blink** **Outdoor Unit : No indication** **ERROR CODE : No indication**
Detective Actuators: Electric air clean unit Indoor Unit Controller PCB Circuit	**Detective details:** The air clean operation signal was detected for 1 minute at the time of air clean mode OFF.

Forecast of Cause :

1. Electric air clean unit failure 2. Controller PCB failure

Check Point 1 : Replace Electric air clean unit

▶ **Change Electric air clean unit.**

OK

Check Point 2 : Replace Controller PCB

▶ **If Check Point 1 do not improve the symptom, change Controller PCB.**

2-3 TROUBLE SHOOTING WITH NO ERROR CODE

Trouble shooting 29

Indoor Unit - No Power

Forecast of Cause:

1. Power Supply failure 2. External cause
3. Electrical Components defective

Check Point 1 : Check Installation Condition

- Isn't the breaker down?
- Check loose or removed connection cable.

>>If abnormal condition is found, correct it by referring to Installation Manual or Data & Technical Manual.

OK

Check Point 2 : Check external cause at Indoor and Outdoor (Voltage drop or Noise)

- Instant drop ----- Check if there is a large load electric apparatus in the same circuit.
- Momentary power failure ----- Check if there is a defective contact or leak current in the power supply circuit.
- Noise ----- Check if there is any equipment causing harmonic wave near electric line. (Neon bulb or electric equipment that may cause harmonic wave) Check the complete insulation of grounding.

OK

Check Point 3 : Check Electrical Components

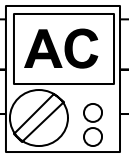

- Check Voltage of power supply.

>> Check AC208 - 230V appears at Indoor Unit Terminal L - N (Power Supply).

NO

YES

- Check Fuse (F101) in Filter PCB.

>> If Fuse is open, check if the wiring between Terminal and Filter PCB is loose, and replace Fuse.

- Check Varistor (VA101, VA102) in Filter PCB.

>> If Varistor is defective, there is a possibility of an abnormal power supply. Check the correct power supply and replace Varistor.

OK

▶ **If the symptom does not change by above Check3, replace Filter PCB.**

Trouble shooting 30

Outdoor Unit - No Power

Forecast of Cause:

1. Power Supply failure 2. External cause
3. Electrical Components defective

Check Point 1 : Check Installation Condition

- Isn't the breaker down?
- Check loose or removed connection cable.

>>If abnormal condition is found, correct it by referring to Installation Manual or Data & Technical Manual.

OK

Check Point 2 : Check external cause at Indoor and Outdoor (Voltage drop or Noise)

- Instant drop ----- Check if there is a large load electric apparatus in the same circuit.
- Momentary power failure ----- Check if there is a defective contact or leak current in the power supply circuit.
- Noise ----- Check if there is any equipment causing harmonic wave near electric line.
  (Neon bulb or electric equipment that may cause harmonic wave)
  Check the complete insulation of grounding.

OK

Check Point 3 : Check Electrical Components

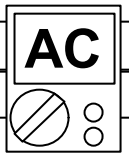

- Check the voltage of power supply.

>> Check if AC208 - 230V appears at Outdoor Unit Terminal L - N.

NO

YES

- Check Fuse (F2, F4) in Main PCB.

>> If Fuse is open, check loose terminal or removed connector (CN1) , and replace Fuse.

- Check Varistor in Main PCB (VA103).

>> If Varistor is defective, there is a possibility of an abnormal power supply.
Check the correct power supply and replace Varistor.
Upon checking the normal power supply, replace Varistor.

YES

- Check Active Filter Module. **(PARTS INFORMATION 3)**

>>If Active Filter Module is abnormal, replace it.

OK

▶ **If the symptom does not change by above Check 3, replace Main PCB.**

Trouble shooting 31

No Operation (Power is ON)

Forecast of Cause:

1. Setting/ Connection failure 2. External cause
3. Electrical Component defective

Check Point 1 : Check indoor and outdoor installation condition

・Indoor Unit - Check incorrect wiring between Indoor Unit - Remote Control, or terminals between Indoor Units. Or, check if there is an open cable connection.
・Are these Indoor Unit, Outdoor Unit, and Remote Control suitable model numbers to connect?
>> If there is some abnormal condition, correct it by referring to Installation manual and Data & Technical Manual.

OK

Turn off Power and check/ correct followings.

・Is there loose or removed communication line of Indoor Unit and Outdoor Unit?

OK

Check Point 2 : Check external cause at Indoor and Outdoor (Voltage drop or Noise)

・Instant drop ----- Check if there is a large load electric apparatus in the same circuit.
・Momentary power failure ----- Check if there is a defective contact or leak current in the power supply circuit.
・Noise ----- Check if there is any equipment causing harmonic wave near electric line.
(Neon bulb or electric equipment that may cause harmonic wave)
Check the complete insulation of grounding.

OK

Check Point 3 : Check Electrical Components at Indoor and Outdoor

・Check Voltage at CN10 of Controller PCB. (Power supply to Remote Control)
>> If it is DC12V, Remote Control is failure. (Controller PCB is normal) >> Replace Remote Control
>> If it is DC 0V, Controller PCB is failure. (Check Remote Control once again) >> Replace Controller PCB

>> If the symptom does not change by above Check 1, 2, 3, replace Main PCB of Outdoor unit.

Trouble shooting 32

No Cooling / No Heating

Forecast of Cause:

1. Indoor Unit error 2. Outdoor Unit error
3. Effect by Surrounding environment
4. Connection Pipe / Connection Wire failure 5. Refrigeration cycle failure

Check Point 1 : Check Indoor Unit

- Does Indoor Unit FAN run on HIGH FAN?
- Is Air Filter dirty?
- Is Heat Exchanger clogged?
- Check if Energy save function is operated.

OK

Check Point 2 : Check Outdoor Unit Operation

- Check if Outdoor Unit is operating
  (If not, refer to Trouble shooting 30)
- Check any objects that obstruct the air flow route.
- Check clogged Heat Exchanger.
- Is the Valve open?

OK

Check Point 3 : Check Site Condition

- Is capacity of Indoor Unit fitted to Room size?
- Any windows open? Or direct sunlight ?

OK

Check Point 4 : Check Indoor/ Outdoor Installation Condition

- Check connection pipe
  (specified pipe length & Pipe diameter?)
- Check any loose or removed communication line.

>> If there is an abnormal condition, correct it by referring to Installation Manual or Data & Technical Manual.

OK

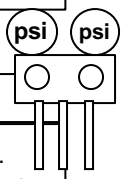

Check Point 5 : Check Refrigeration Cycle

- Check if Strainer is clogged (Refer to the figure at right).
- Measure Gas Pressure and if there is a leakage, correct it.

>> When recharging the refrigerant, make sure to perform vacuuming, and recharge the specified amount.

- Check EEV (PARTS INFORMATION 4)
- Check Compressor (PARTS INFORMATION 1,2)

Attention

Strainer normally does not have temperature difference between inlet and outlet as shown in ①, but if there is a difference like shown in ②, there is a possibility of inside clogged. In this case, replace Strainer.

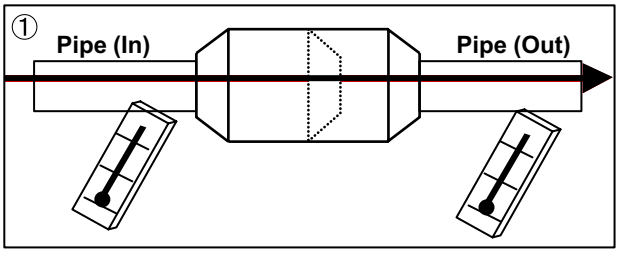

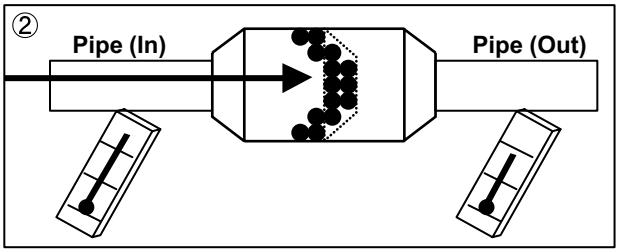

Trouble shooting 33

Abnormal Noise

Forecast of Cause :

1. Abnormal installation (Indoor/ Outdoor) 2. Fan failure(Indoor/ Outdoor)
3. Compressor failure (Outdoor)

Diagnosis method when Abnormal Noise is occurred

- Abnormal noise is coming from Indoor Unit. (Check and correct followings)

- Is Main Unit installed in stable condition?
- Is the installation of Air suction grille and front panel normal?

OK

- Is Fan broken or deformed?
- Is the screw of Fan loose?
- Is there any object which obstruct the Fan rotation?

- Abnormal noise is coming from Outdoor Unit. (Check and correct followings)

- Is Main Unit installed in stable condition?
- Is Fan Guard installed normally?

OK

- Is Fan broken or deformed?
- Is the screw of Fan loose?
- Is there any object which obstruct the Fan rotation?

OK

- Check if vibration noise by loose bolt or contact noise of piping is happening.

OK

- Is Compressor locked?
  >> Check Compressor (PARTS INFORMATION 1,2)

Trouble shooting 34

Water Leaking

Forecast of Cause:

1. Erroneous installation 2. Drain hose failure

Diagnosis method when water leak occurs

- Is Main Unit installed in stable condition?
- Is Main Unit broken or deformed at the time of transportation or maintenance?

OK

- Is Drain Hose connection loose?
- Is there a trap in Drain Hose?
- Is Drain Hose clogged?

OK

- Is Fan rotating?
  >> Check Fan Motor (PARTS INFORMATION 5)

Diagnosis method when water is spitting out.

- Is the filter clogged?

OK

- Check Gas Pressure and correct it if there was a gas leak.

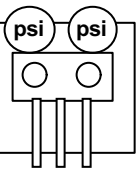

2-4 SERVICE PARTS INFORMATION

SERVICE PARTS INFORMATION 1

Compressor

Diagnosis method of Compressor (If Outdoor Unit LED displays Error, refer to Trouble shooting)

Does not start up

- Is there open or loose connection cable?
- Check Filter PCB, Main PCB, connection of Compressor,and winding resistance. (Refer to the next page).

>> If there is no failure, the defect of Compressor is considered (Locked compressor due to clogged dirt or less oil)

Replace Compressor

Stops soon after starting up

- Is there open or loose connection cable?
- Is Gas Pipe Valve open? (Low Pressure is too low)
- Check if Refrigerant is leaking. (Recharge Refrigerant)

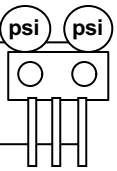

- Check if Strainer is clogged. (PARTS INFORMATION 4)
- Check Filter PCB, Main PCB, connection of Compressor,and winding resistance. (Refer to the next page).

>> If there is no failure, the defect of Compressor can be considered. (Compression part broken or valve defective.)

Replace Compressor

Abnormal noise

- Check if vibration noise by loose bolt or contact noise of piping is happening.

▶Defective Compressor can be considered. (due to inside dirt clogging or broken component)

Replace Compressor

SERVICE PARTS INFORMATION 2

Inverter Compressor

Check Point 1 : Check Connection

· Check terminal connection of Compressor (loose or incorrect wiring)

· Check connection of Main PCB (Loose or incorrect wiring)

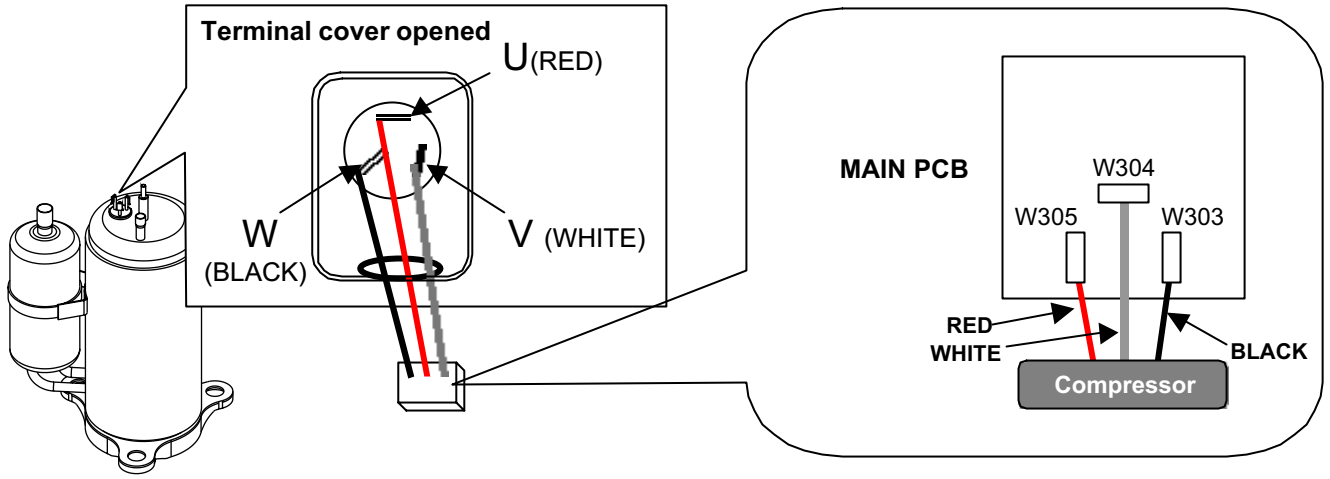

Check Point 2 : Check Winding Resistance

· Check winding resistance of each terminal

▶ **If the resistance value is 0Ω or infinite, replace Compressor.**

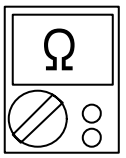

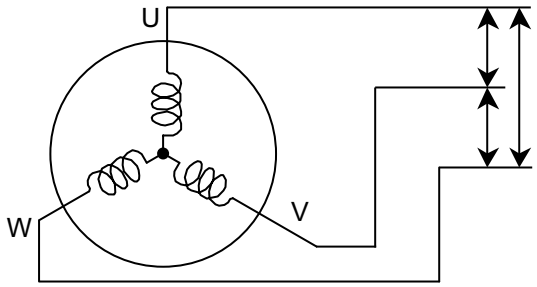

Resistance Value : 0.88 Ω
at 68°F(20°C)

Check Point 3 : Replace Main PCB

▶ **If the symptom does not change with above Check 1, 2, replace Main PCB.**

SERVICE PARTS INFORMATION 3

Active Filter Module

Check Point 1 : Check Open or Short-circuit and Diode (D1)

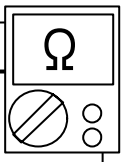

・Remove connector, check the open or short-circuit and the diode in the module

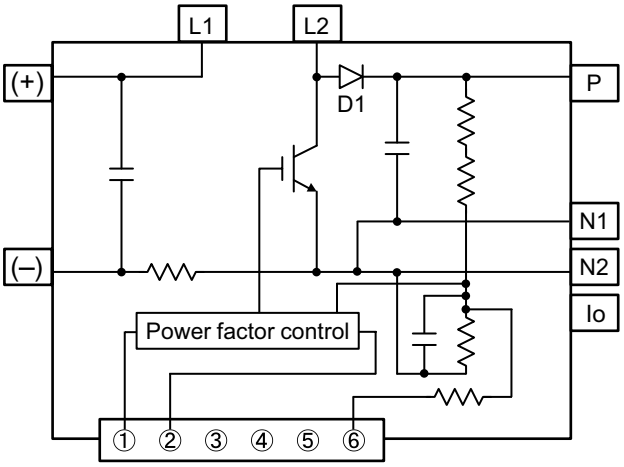

Check the open or short-circuit

Terminal		Resistance value
Tester(+)	Tester(-)	
(+)	(–)	**360kΩ**
(–)	N1	**0Ω**
P	(+)	**720kΩ**
L1	L2	**5.4MΩ** (approx.)
P	N1	**360kΩ**
L1,L2	Control Box	**∞ Ω**
L2	N2	**5.8MΩ**(approx.)

Check the diode

Terminal		Resistance value
Tester(+)	Tester(-)	
L2	P	**5.3MΩ** (approx.)
P	L2	**5.4MΩ** (approx.)

▶ **If it is abnormal,replace ACTIVE FILTER MODULE**

Check Point 2 : Check the Output DC voltage (between P and N1)

・Check the Output DC voltage (between P and N1) of compressor stopping and operating.

>> If the output voltage of compressor operating is less than the output voltage of compressor stopping, Active Filter Module is detective. >> **Replace Active Filter Module**

SERVICE PARTS INFORMATION 4

Outdoor unit Electronic Expansion Valve
(EEV)

Check Point 1 : Check Connections

・Check connection of connector
(Loose connector or open cable)

AOU24RML

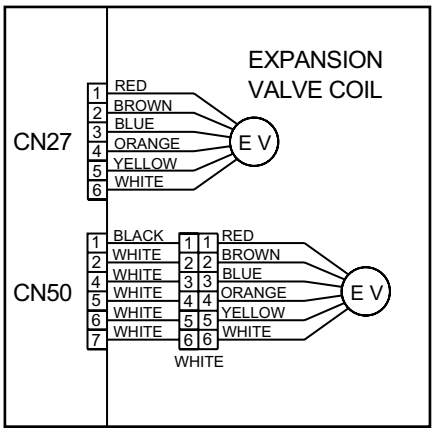

AOU36RML

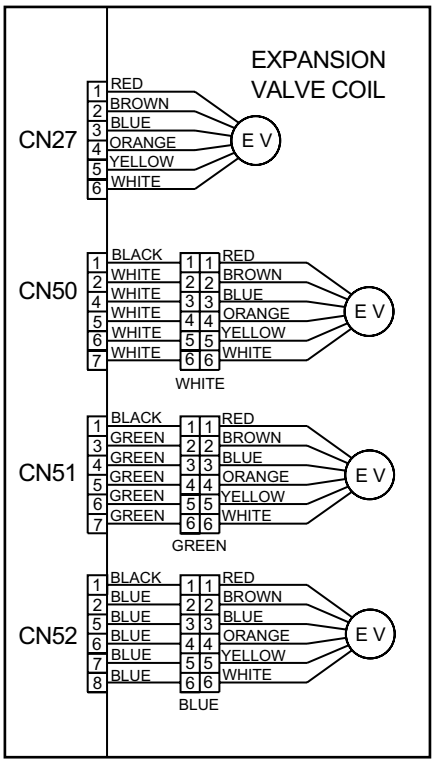

Check Point 2 : Check Coil of EEV

・Remove connector, check each winding resistance of Coil.

Read wire	Resistance value
White - Red	**46**Ω ± **4**Ω at 68°F(20°C)
Yellow - Brown	
Orange - Red	
Blue - Brown	

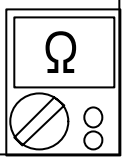

▶ **If Resistance value is abnormal, replace EEV.**

Check Point 3 : Check Voltage from Main PCB.

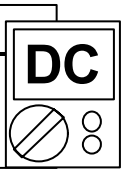

・Remove Connector and check Voltage (DC12V)

▶ **If it does not appear, replace Main PCB.**

Check Point 4 : Check Noise at start up

・Turn on Power and check operation noise.

▶ **If an abnormal noise does not show, replace Main PCB.**

Check Point 5 : Check Opening and Closing Operation of Valve

When Valve is closed,
it has a temp. difference between Inlet and Outlet.

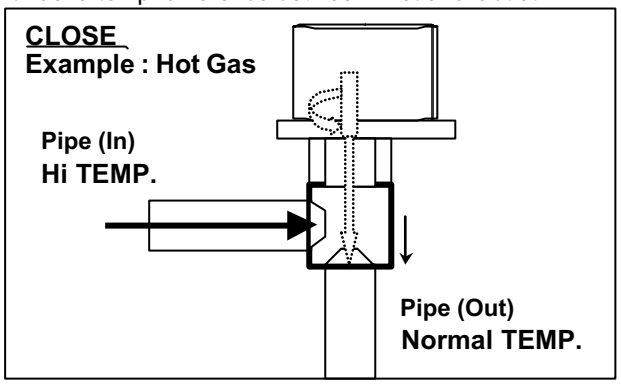

If it is open,
it has no temp. difference between Inlet and Outlet.

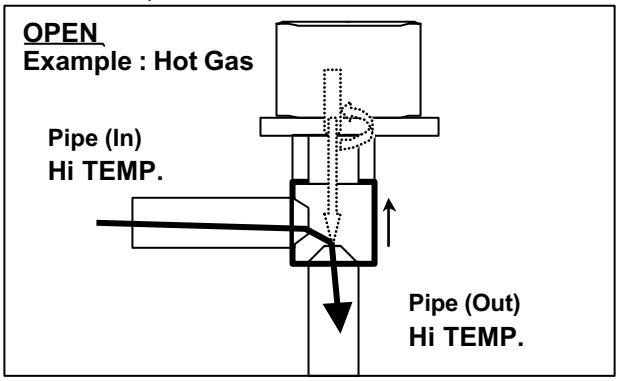

Check Point 6 : Check Strainer

Strainer normally does not have temperature difference between inlet and outlet as shown in ① ,
but if there is a difference as shown in ② , there is a possibility of inside clogged. In this case, replace Strainer.

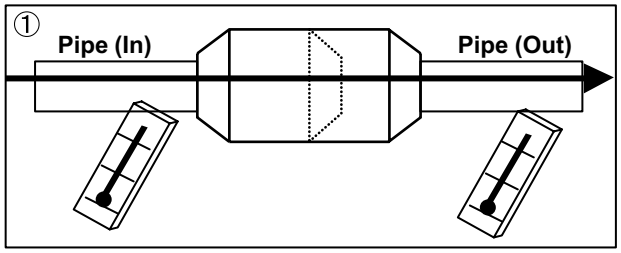

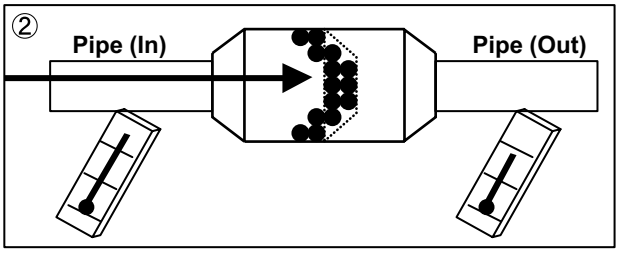

Refrigerant
R410A

WALL MOUNTED type
INVERTER (MULTI)

3 . REPLACEMENT PARTS

REPLACEMENT PARTS

Models :
ASU9RMLQ
ASU12RMLQ

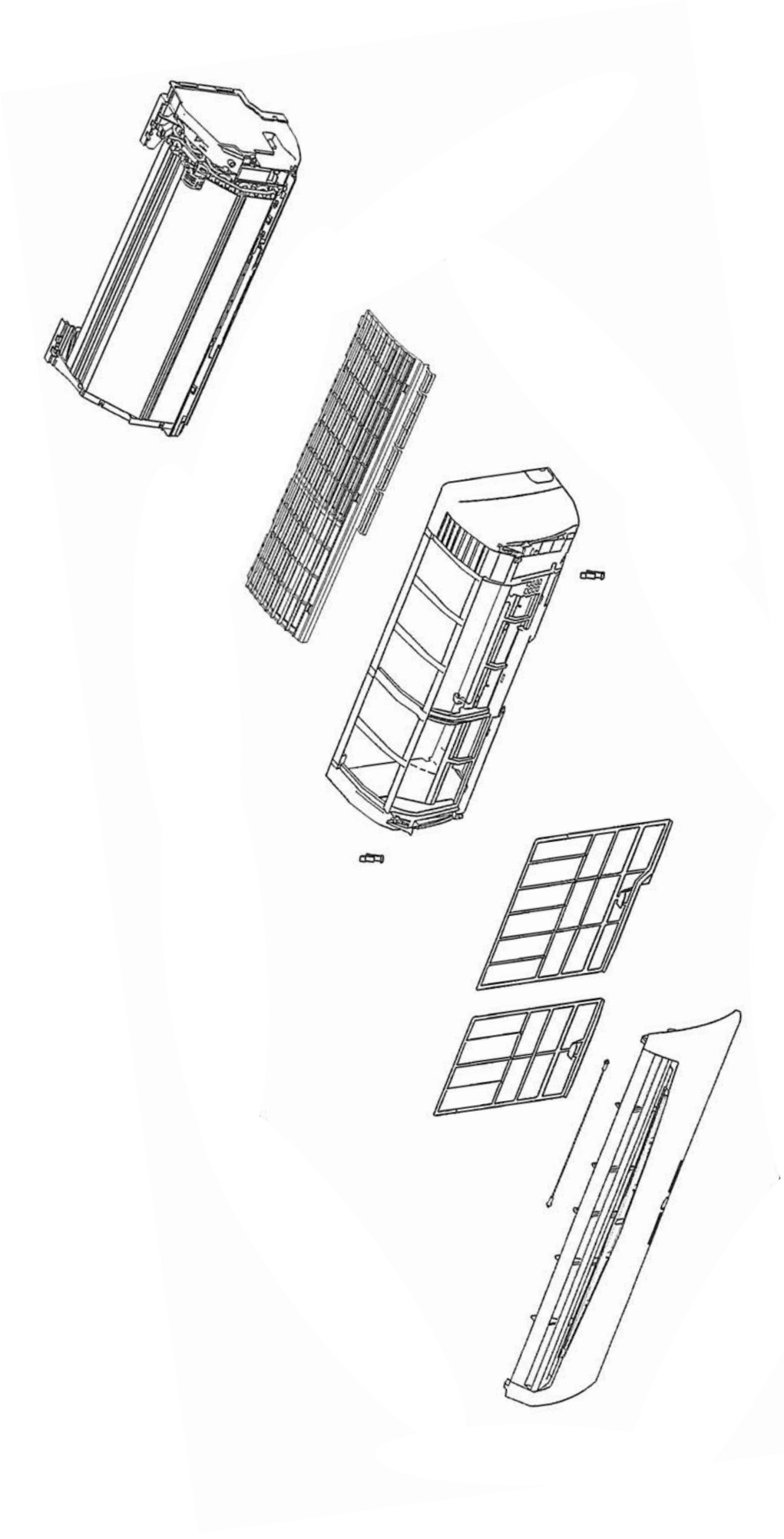

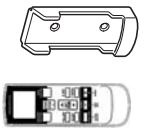

REPLACEMENT PARTS

Models：
ASU9RMLQ
ASU12RMLQ

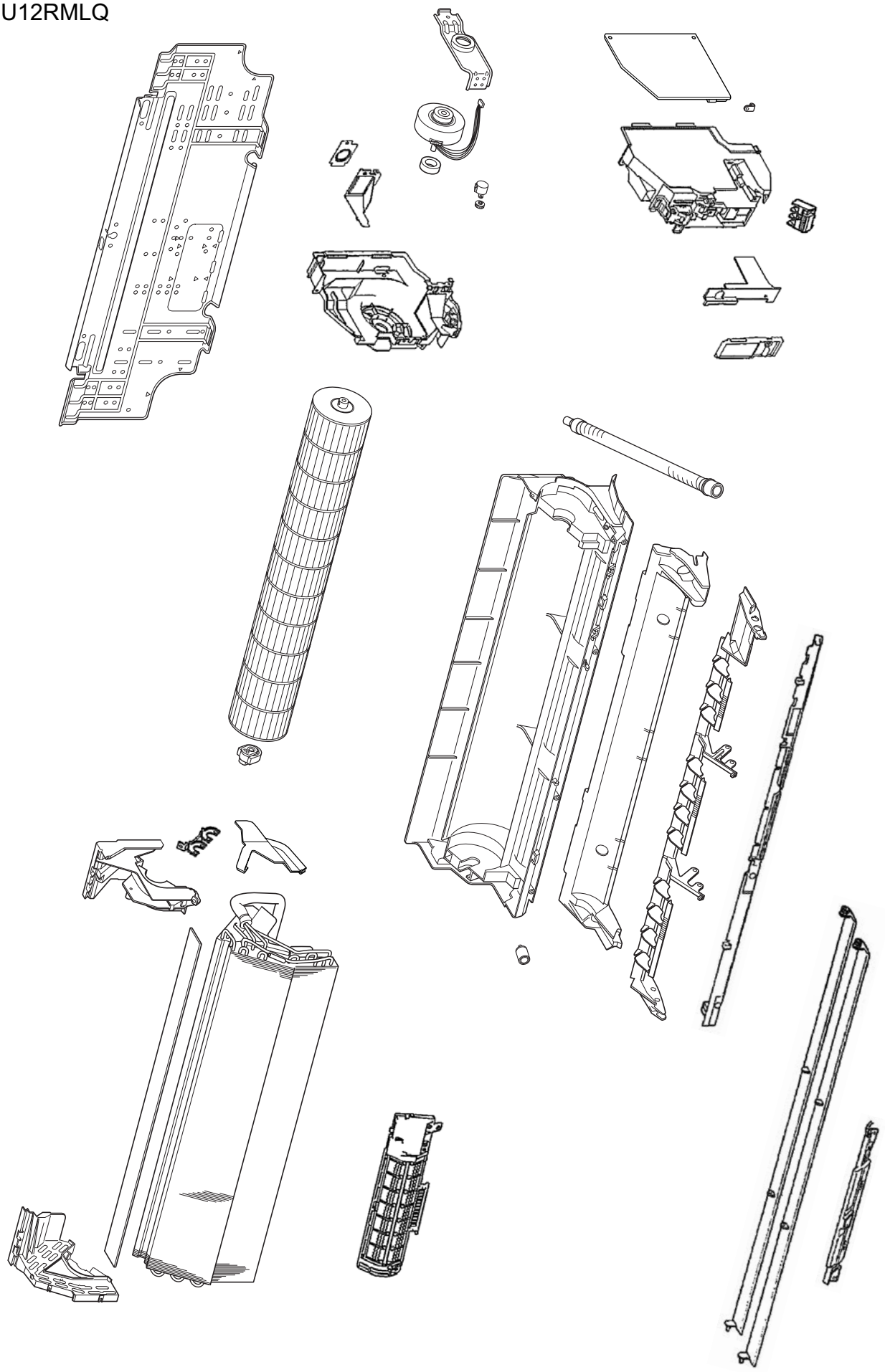

REPLACEMENT PARTS

Model : AOU24RML

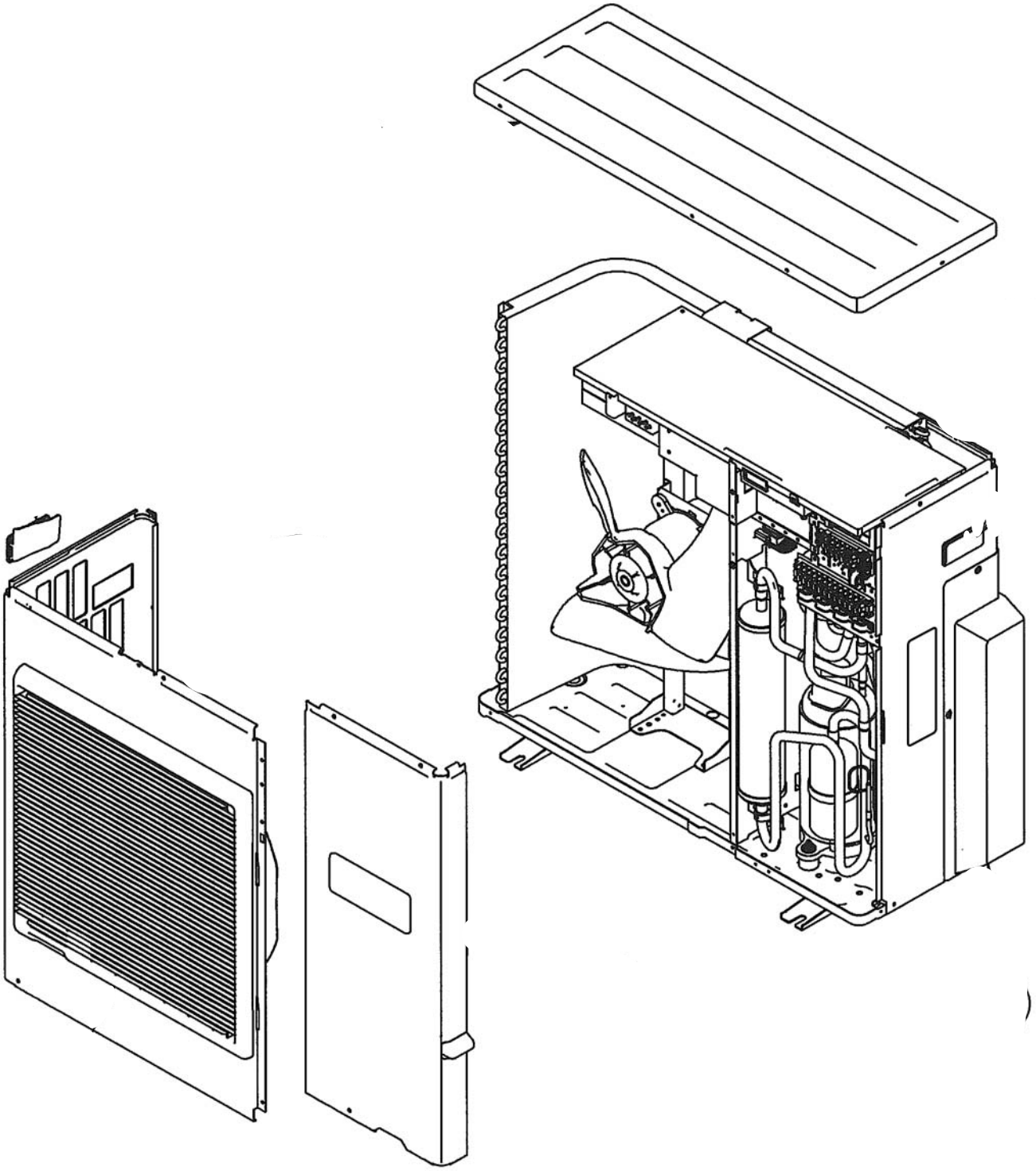

REPLACEMENT PARTS

Model : AOU24RML

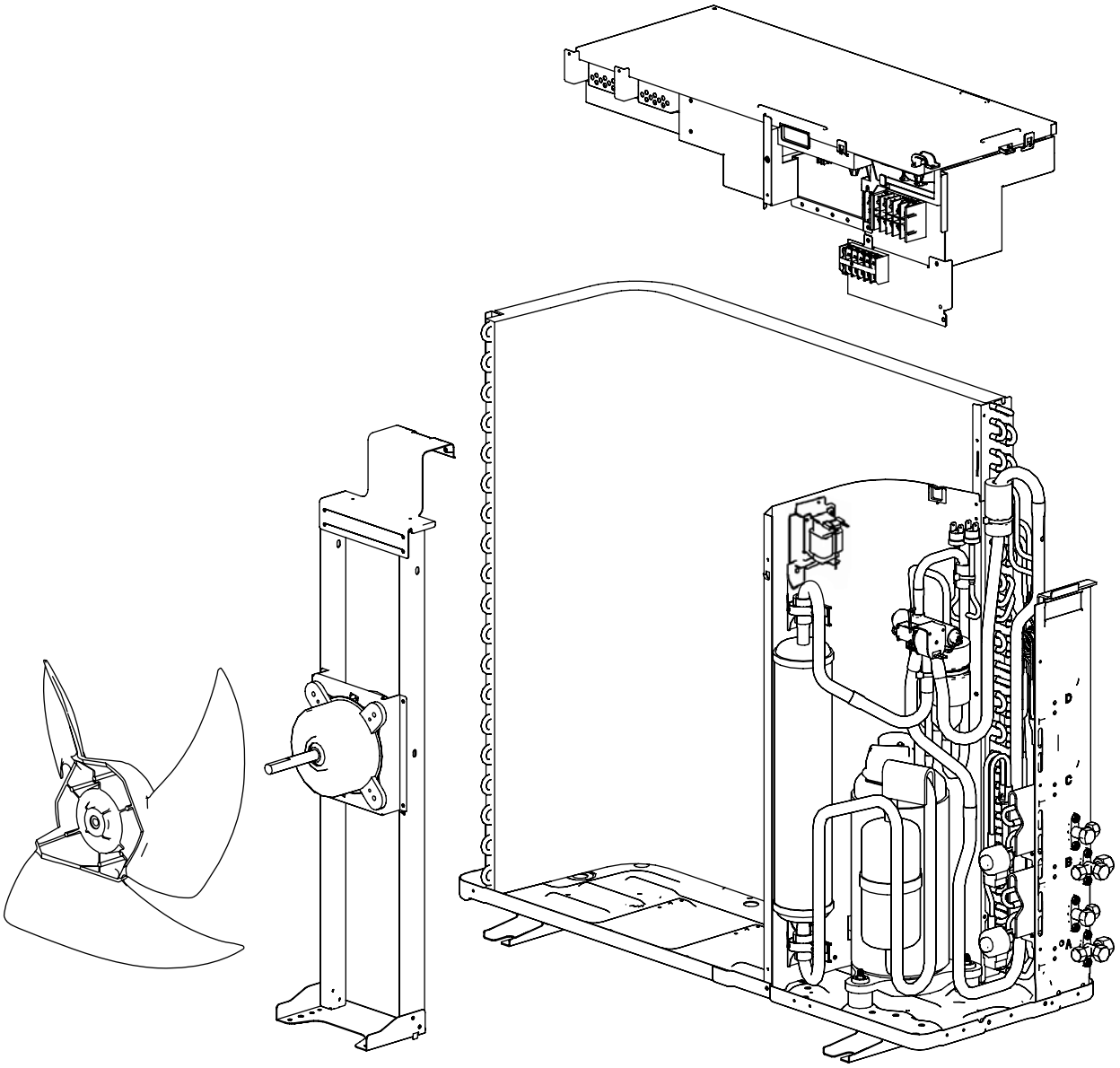

REPLACEMENT PARTS

Model : AOU24RML

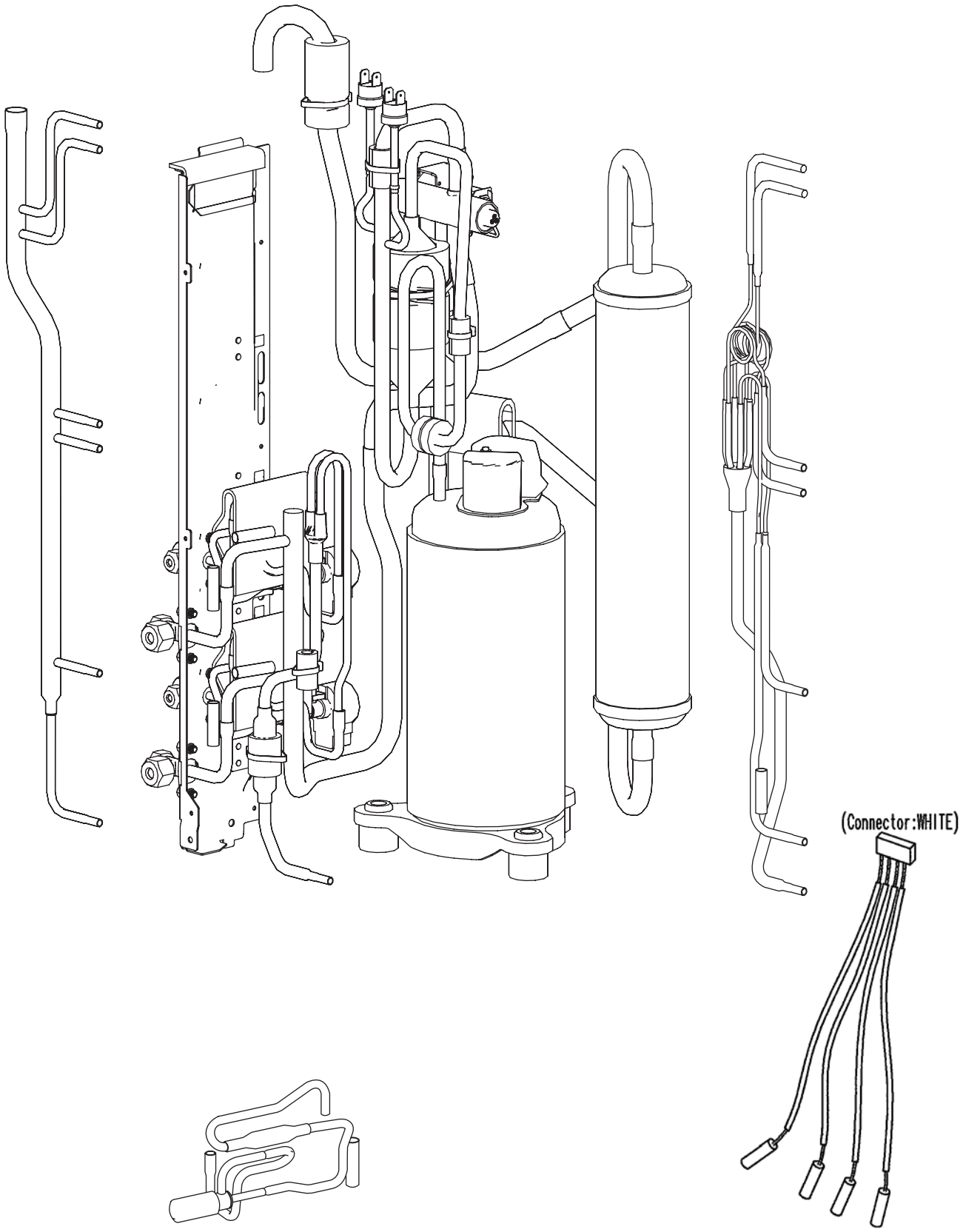

REPLACEMENT PARTS

Model : AOU24RML

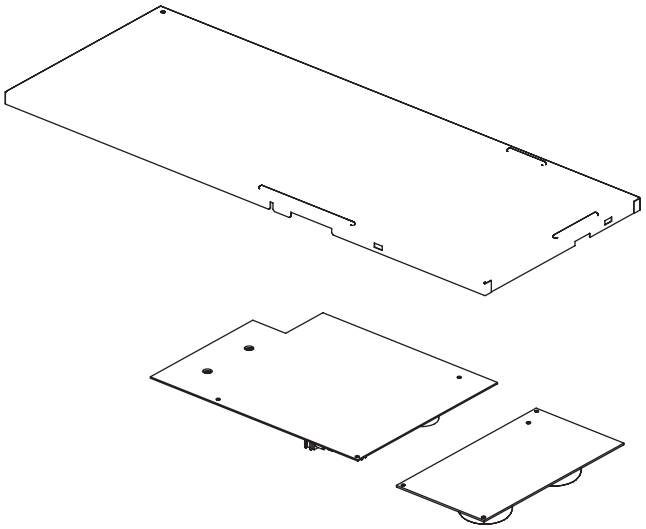

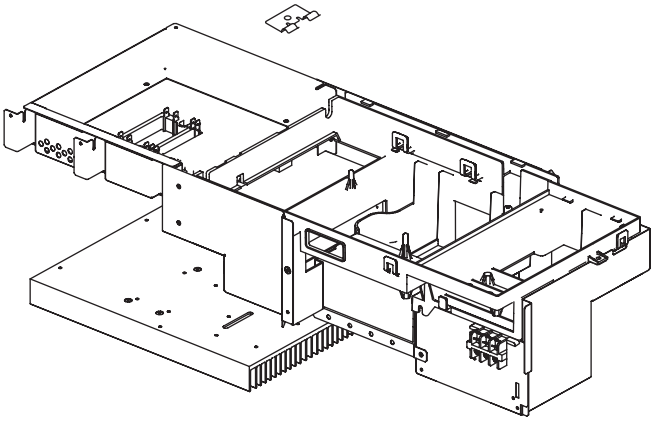

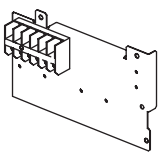

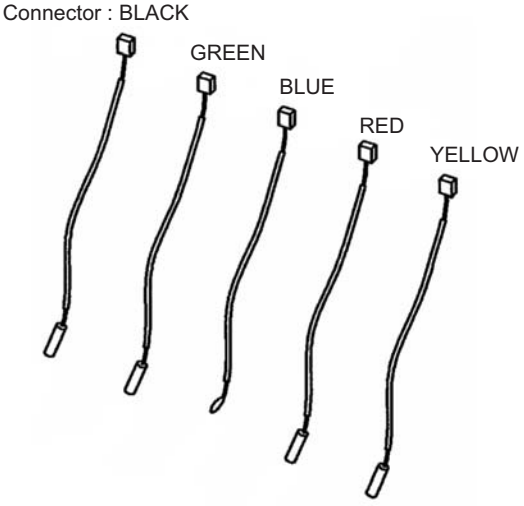

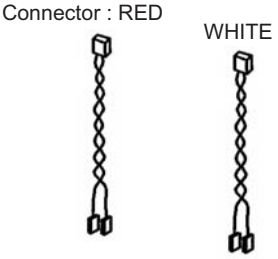

Model : AOU36RML

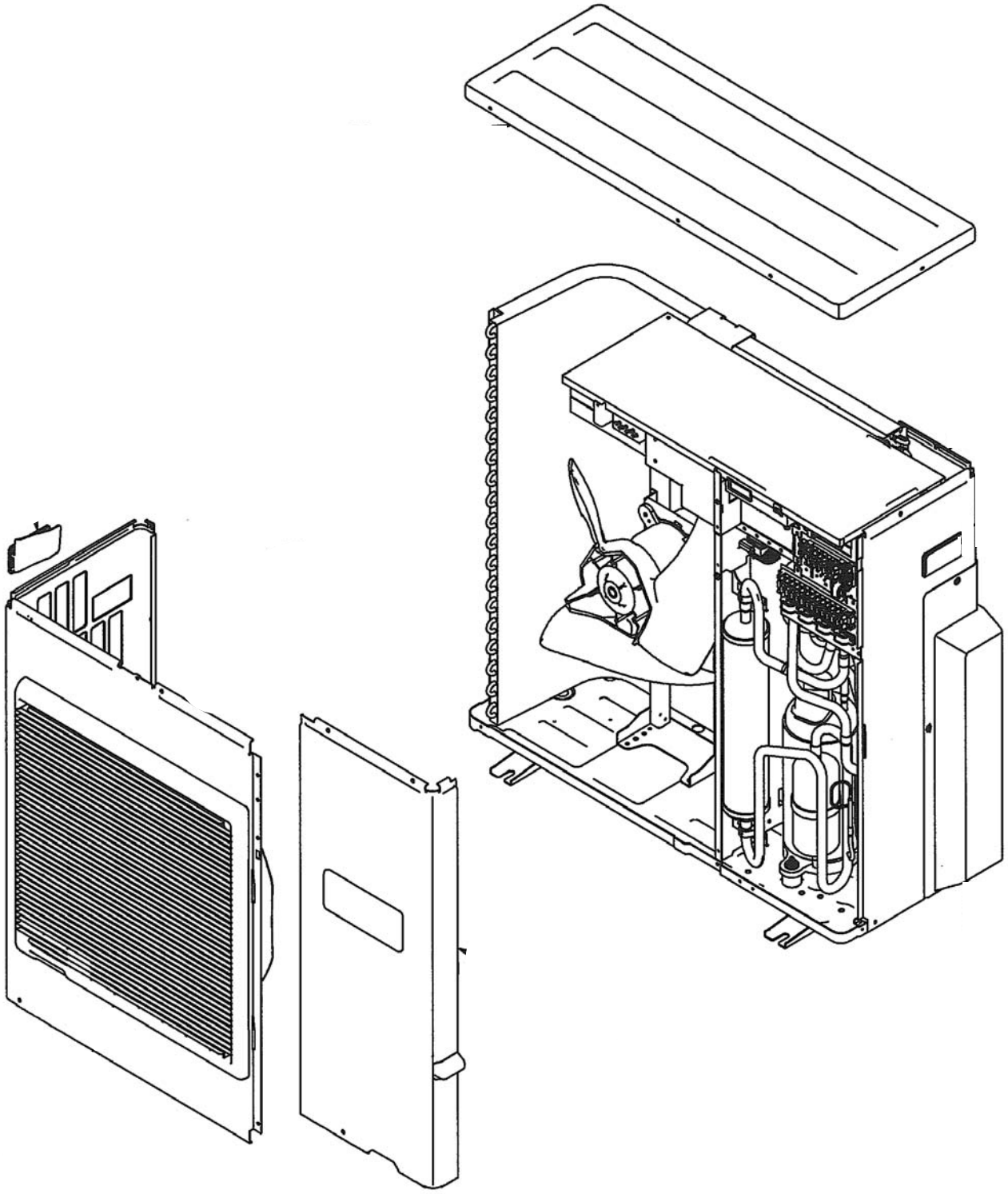

REPLACEMENT PARTS

Model : AOU36RML

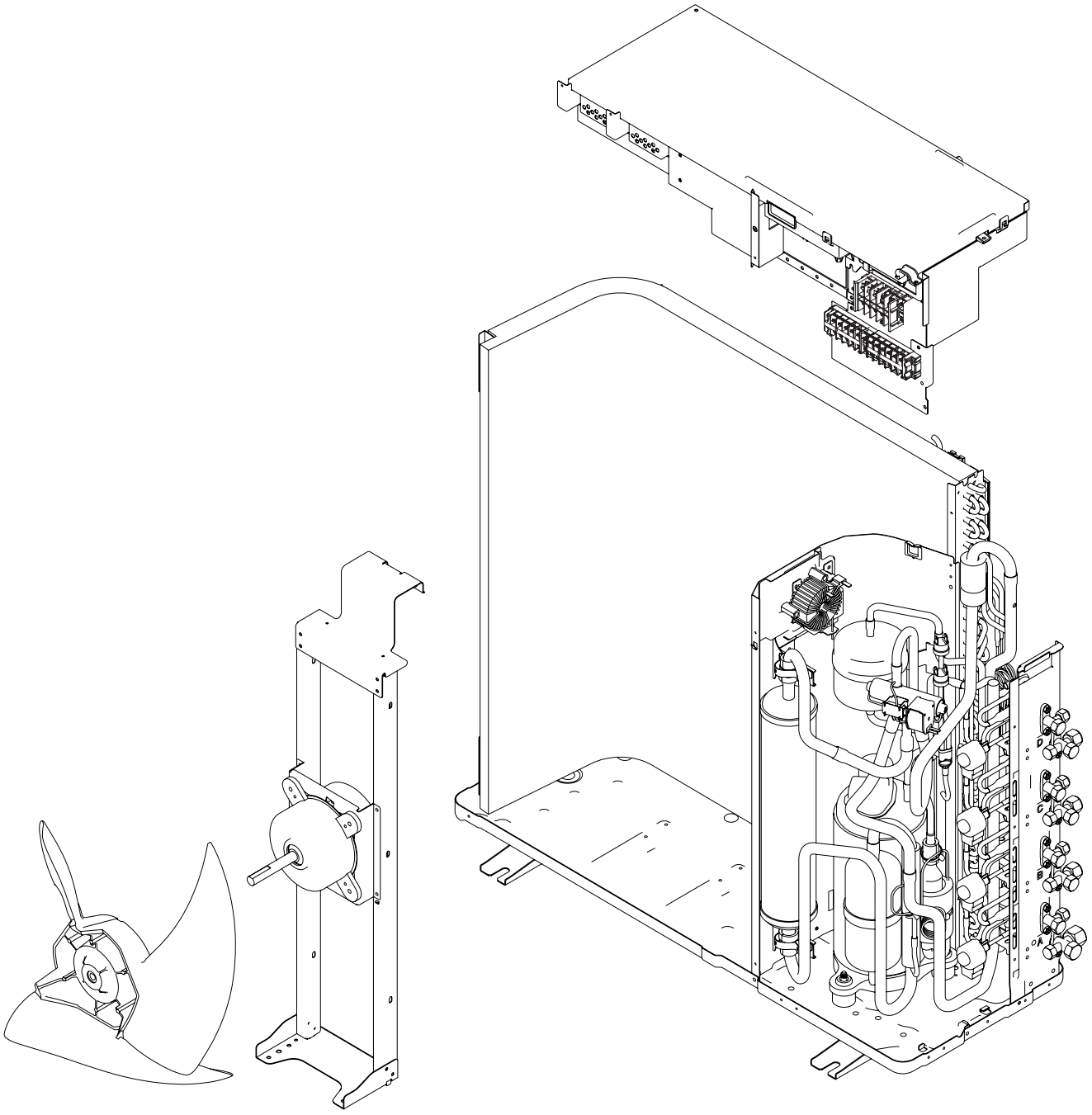

REPLACEMENT PARTS

Model : AOU36RML

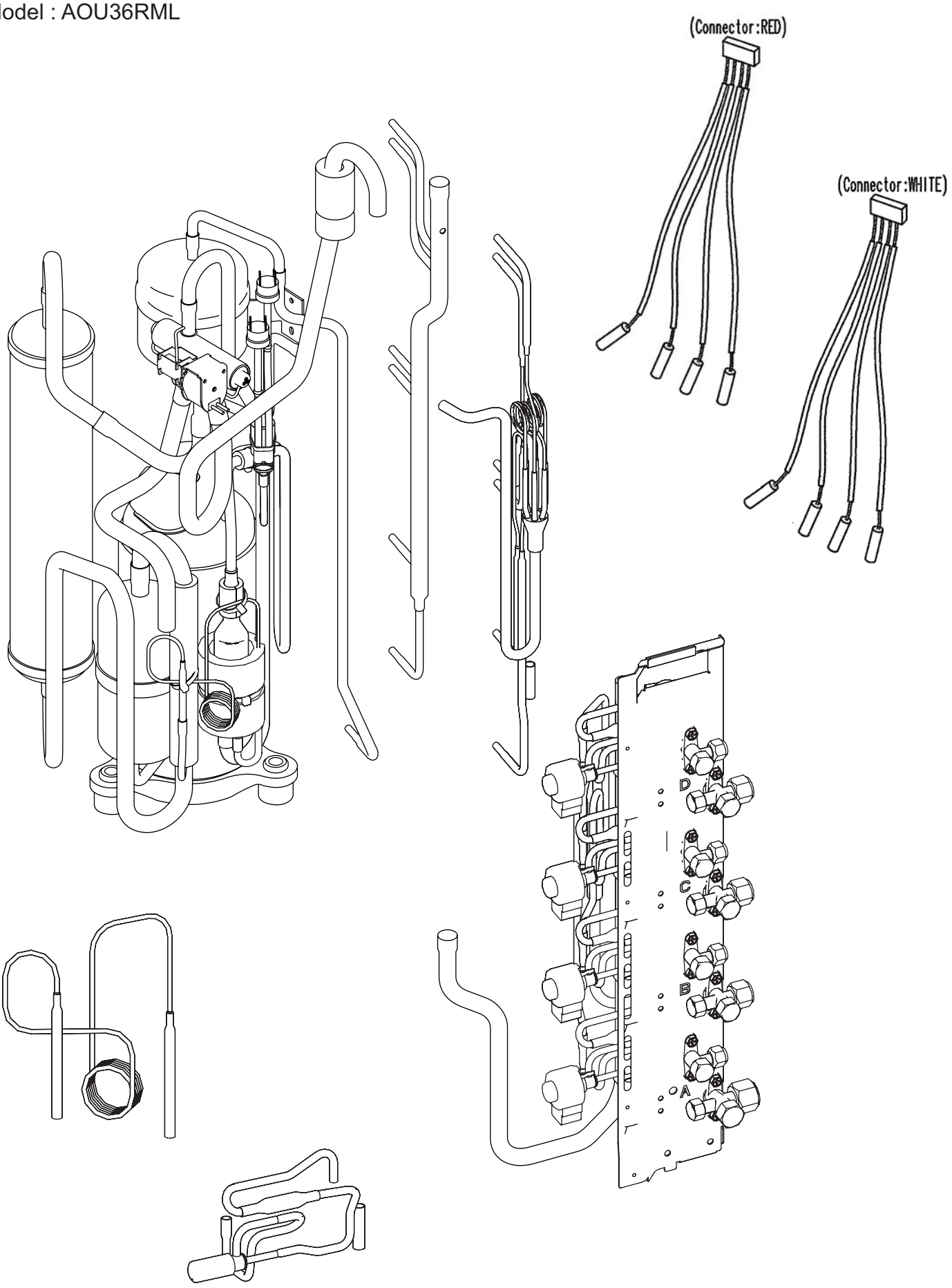

REPLACEMENT PARTS

Model : AOU36RML

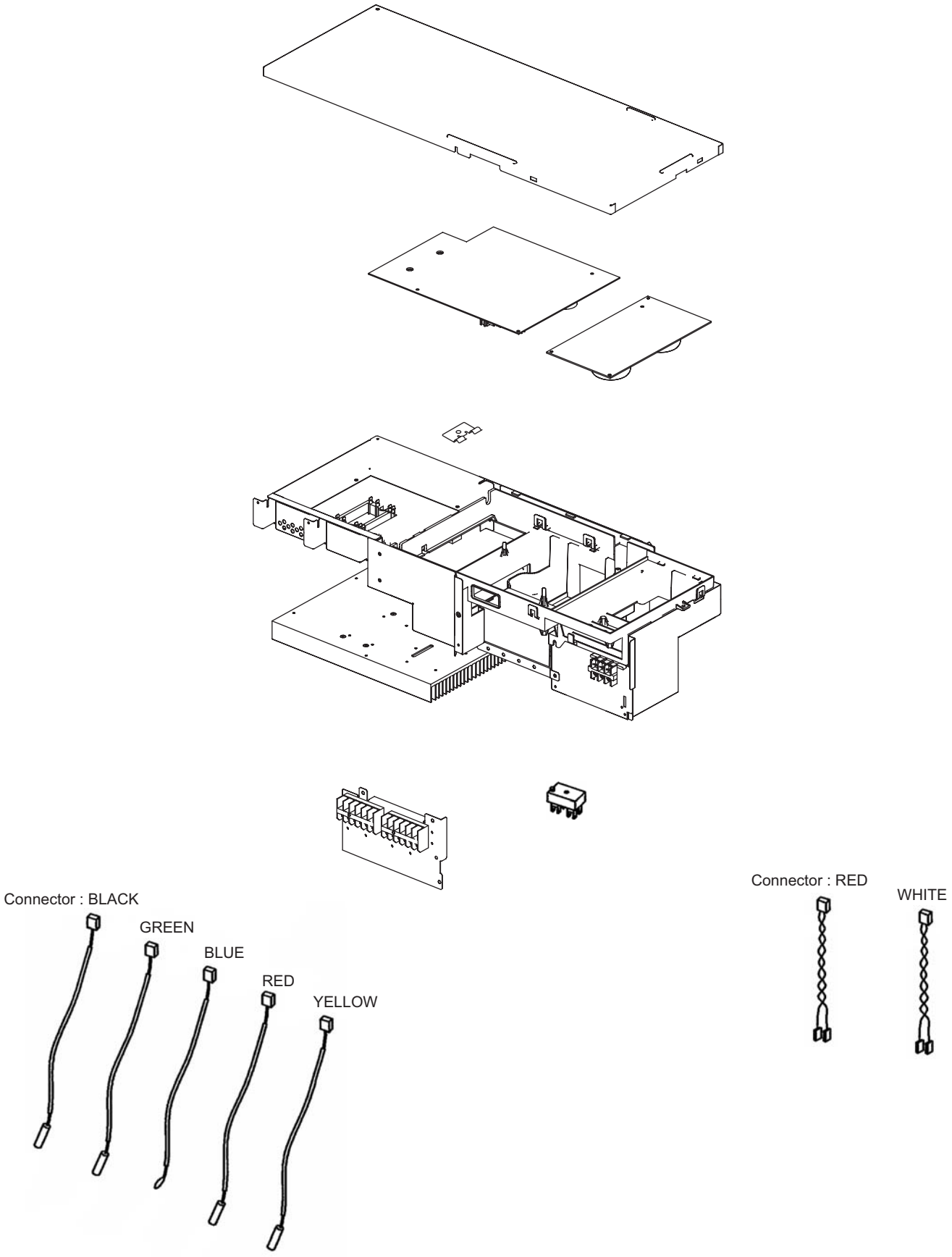

REPLACEMENT PARTS

MODEL : AOU24RML

PROCESS Assemble PWB ASSY
(FILTER PCB)

USED PARTS
① INVERTER BOX A
② FILTER PCB
③ SCREW,TAPPING

REGULATION

As shown in Fig.1, assemble PWB ASSY to INVERTER BOX A.
As shown in Fig.2, pull out the wires of PWB ASSY.
Don't sandwich ARRESTER (SA100) between PWB and INVERTER BOX A.

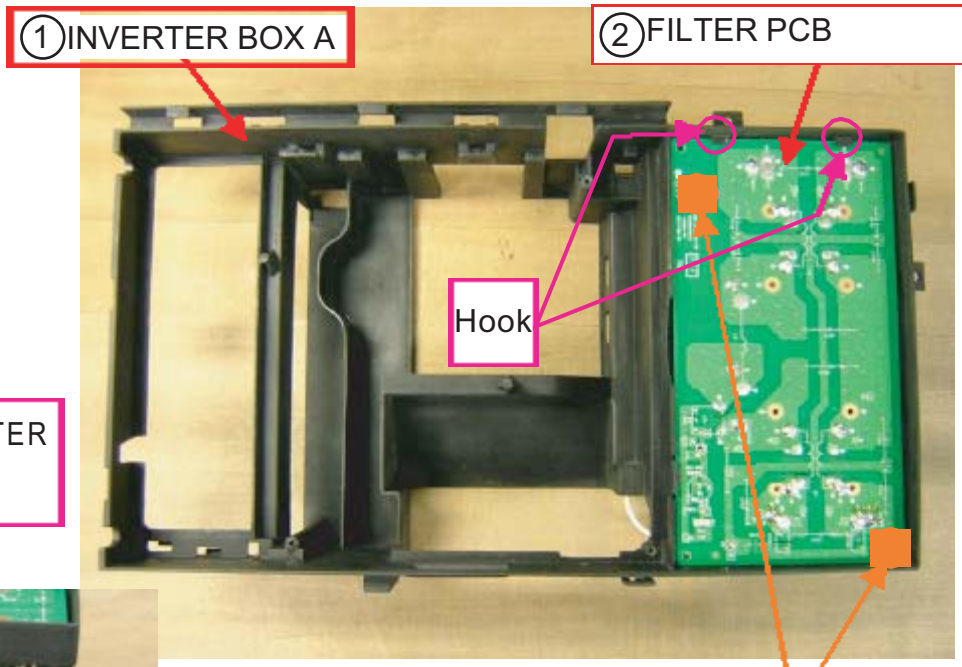

Fig.1

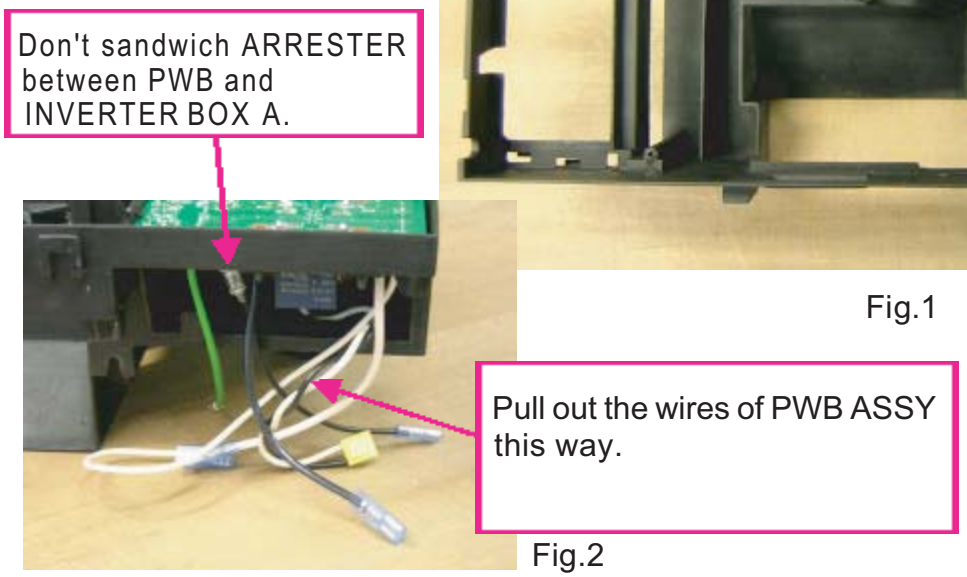

Fig.2

REPLACEMENT PARTS

MODEL : AOU24RML

PROCESS Assemble PCB ASSY (MAIN PWB)

USED PARTS
① INVERTER BOX A
② MAIN PCB
③ SCREW, TAPPING

REGULATIONS

Certainly set PWB ASSY under the 3 hooks of INVERTER BOX A.
Before it is temporary fix of PCB ASSY, As shown in the Fig.2-5, pull out the wires of PCB ASSY.
After it is temporary fix of PCB ASSY, As shown in the Fig.6-10, pull out the wires of PCB ASSY.
Don't forget to take a cushion D101(DIODE BRIDGE).
Don't bend foot D101(DIODE BRIDGE).

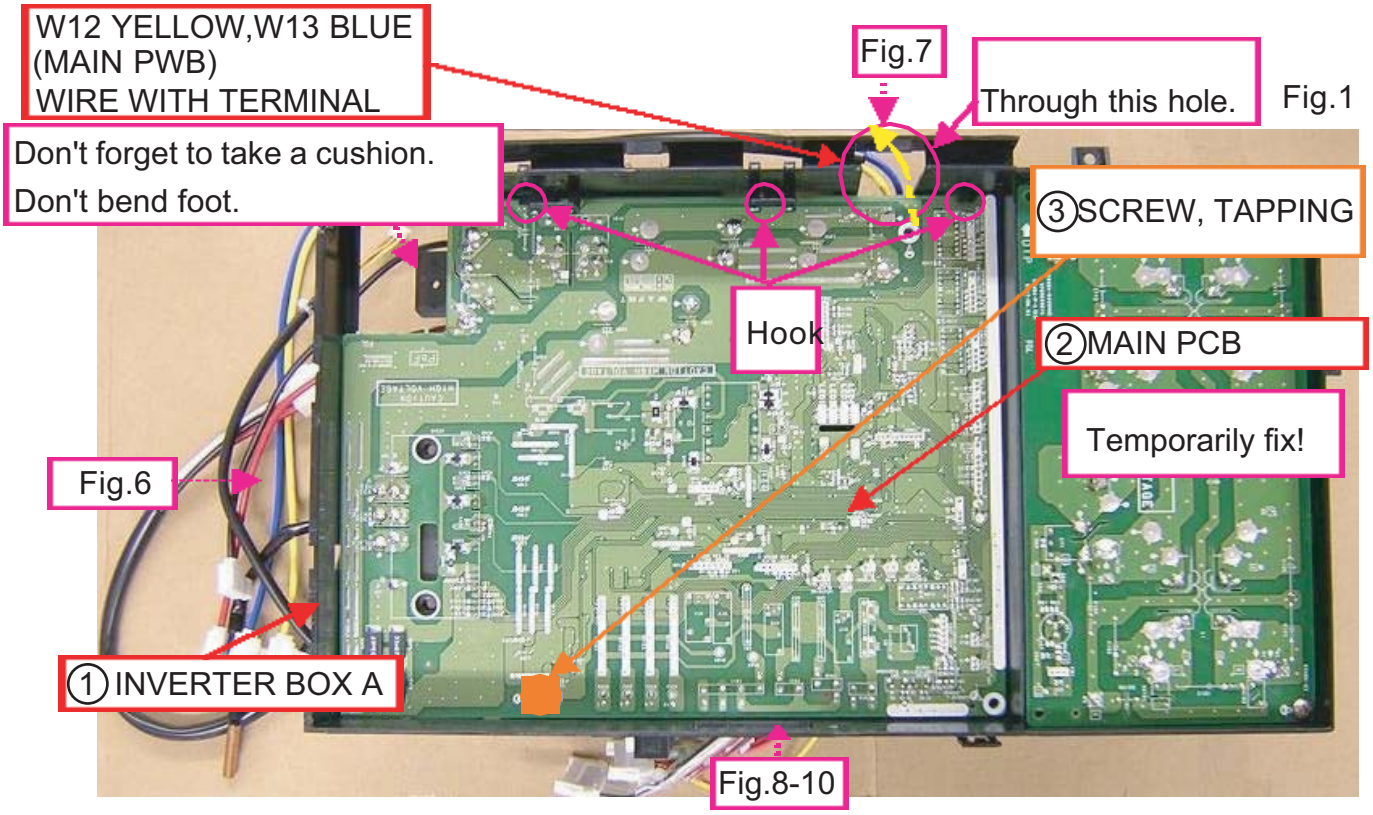

MODEL : AOU24RML

REGULATIONS

As shown in Fig.2, pull out the wires.

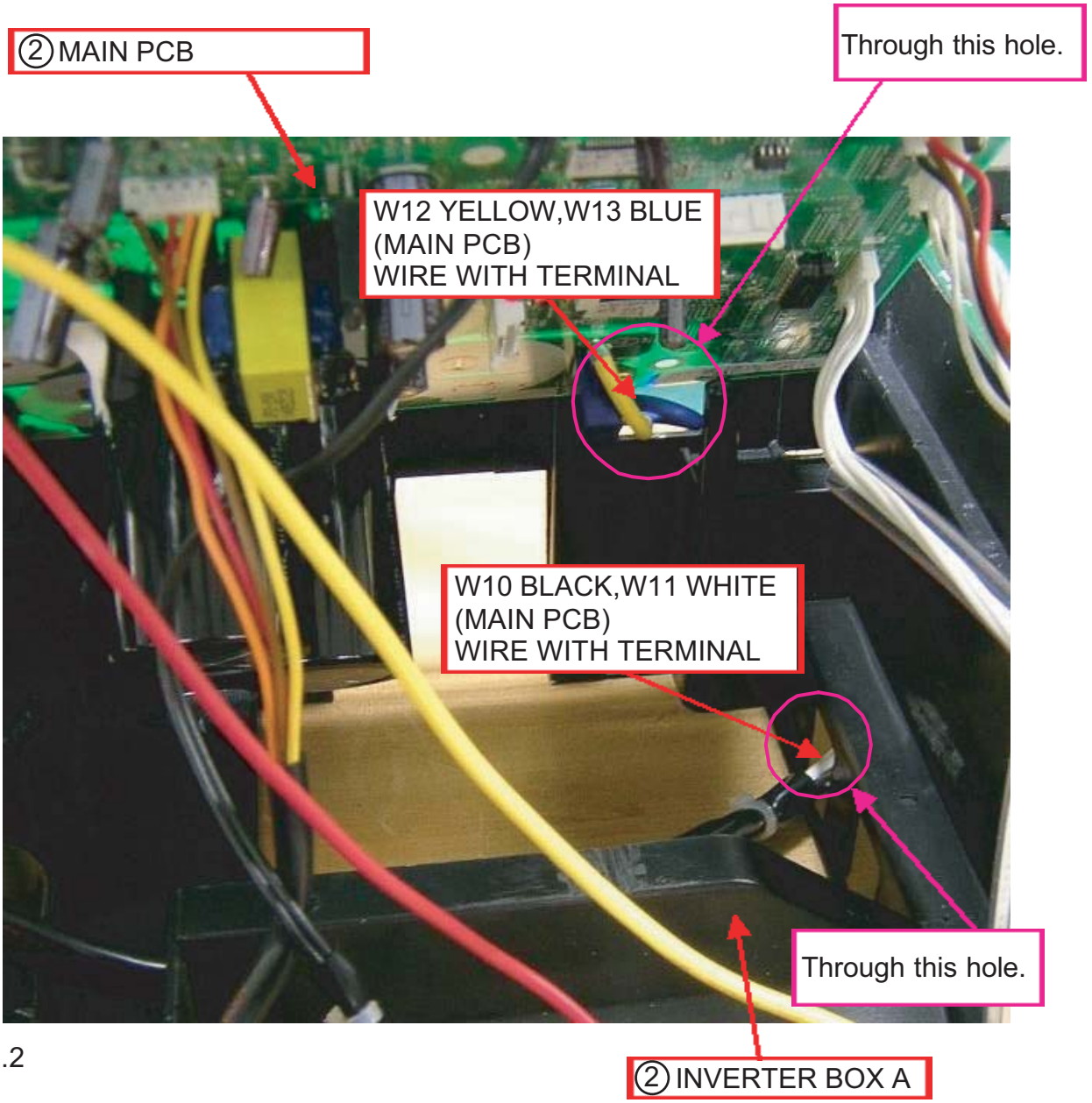

Fig.2

MODEL : AOU24RML

REGULATIONS

As shown in Fig.3, pull out the wires.

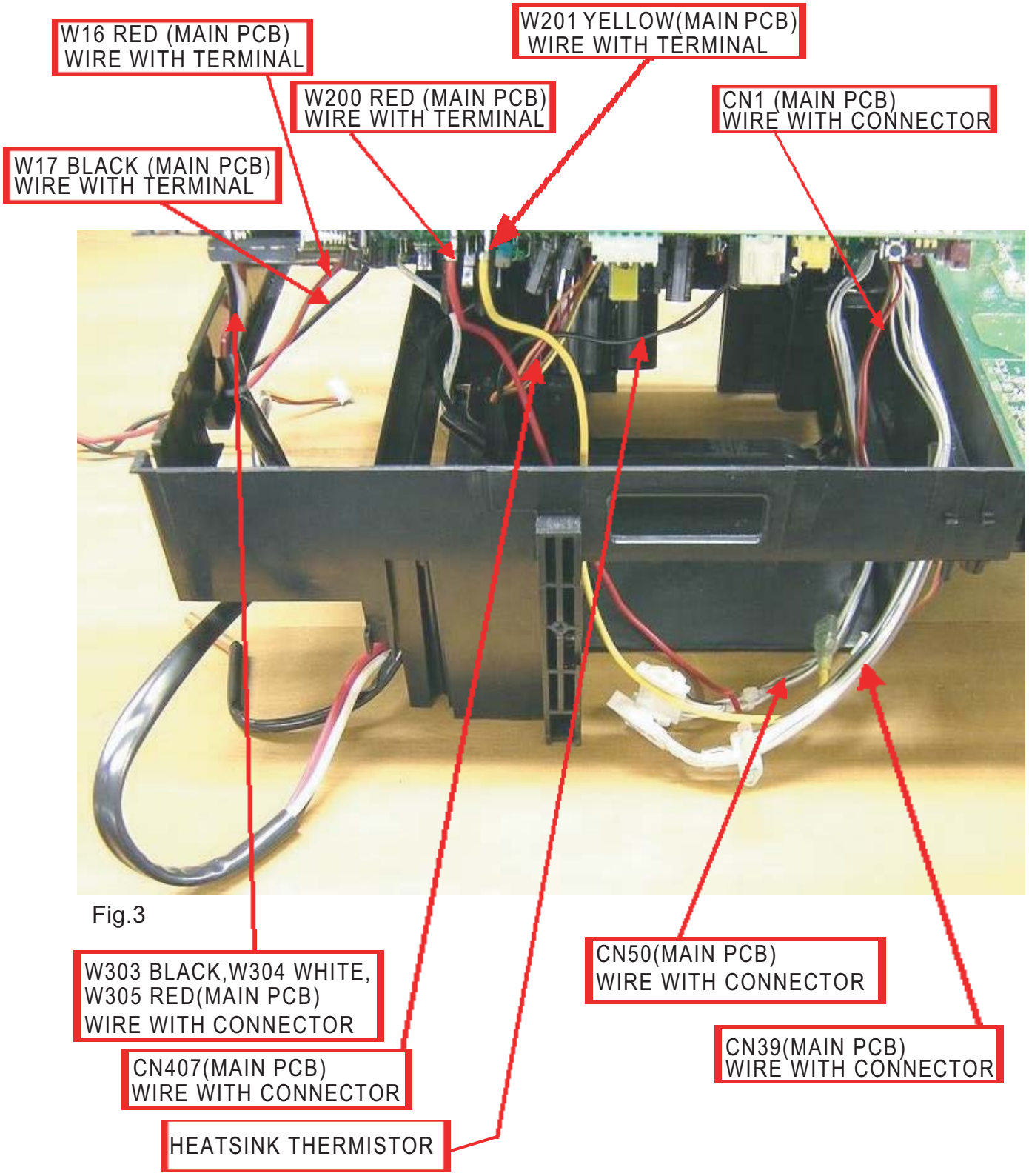

Fig.3

MODEL : AOU24RML

REGULATIONS

As shown in Fig.4-5, pull out the wires.

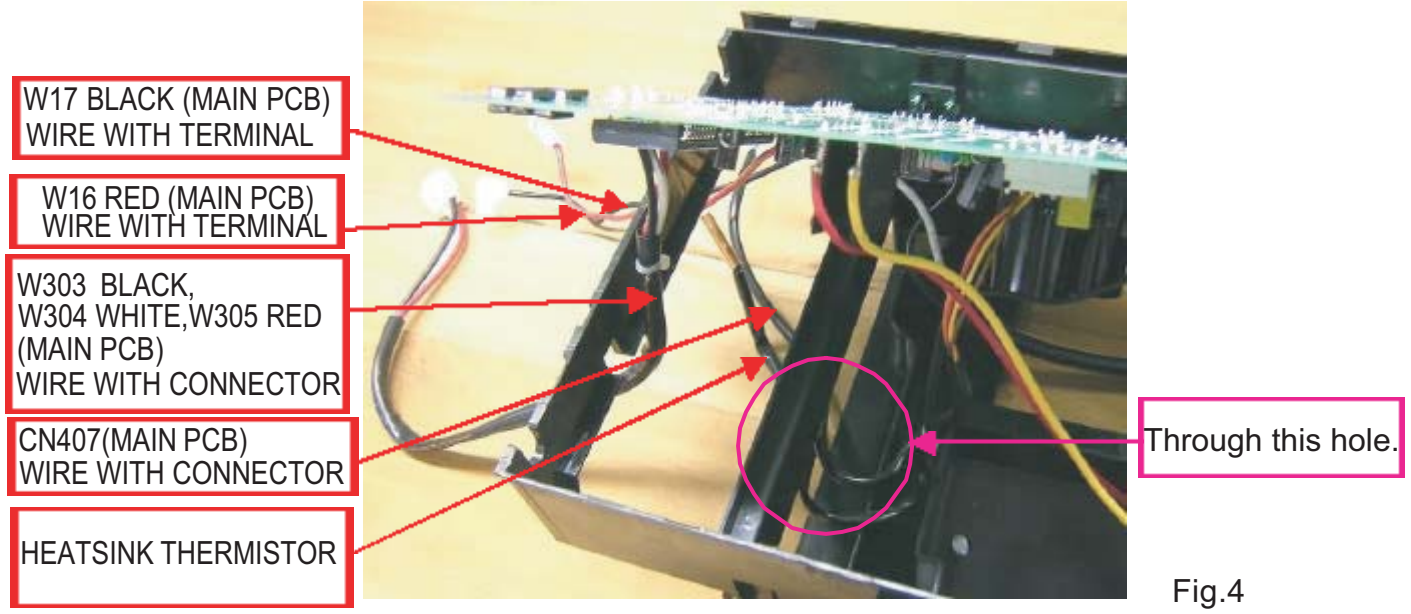

Fig.4

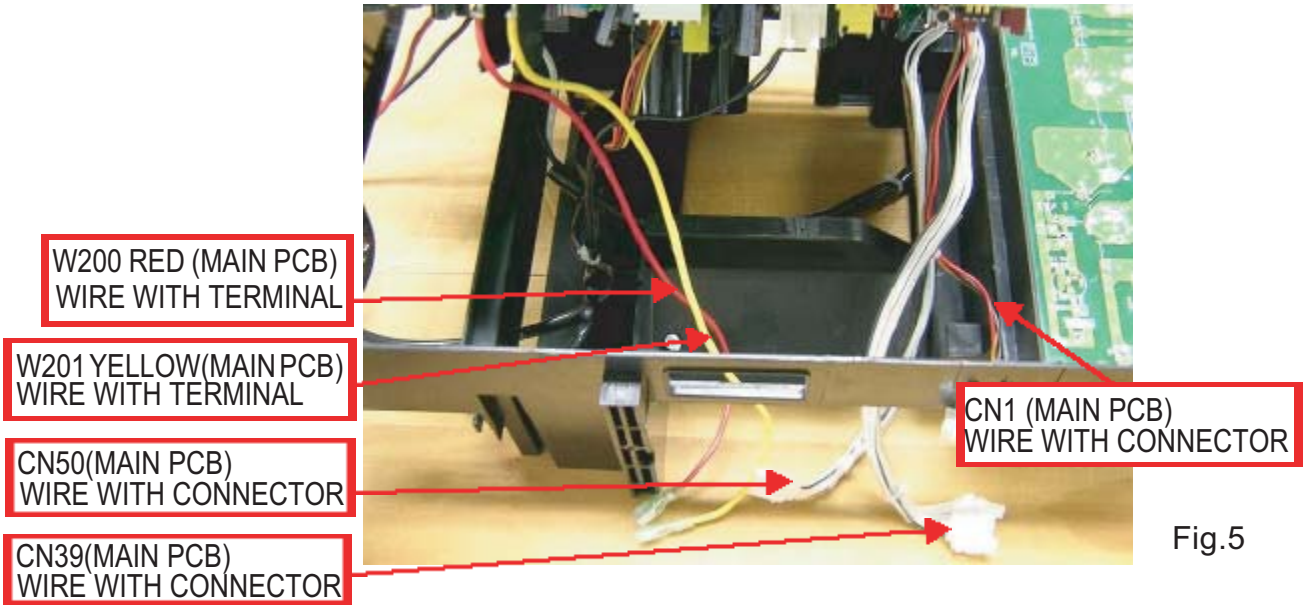

Fig.5

MODEL : AOU24RML

REGULATIONS

As shown in Fig.6, pull out the wires.
As shown in the Fig.7, pull out the wires and fix them.

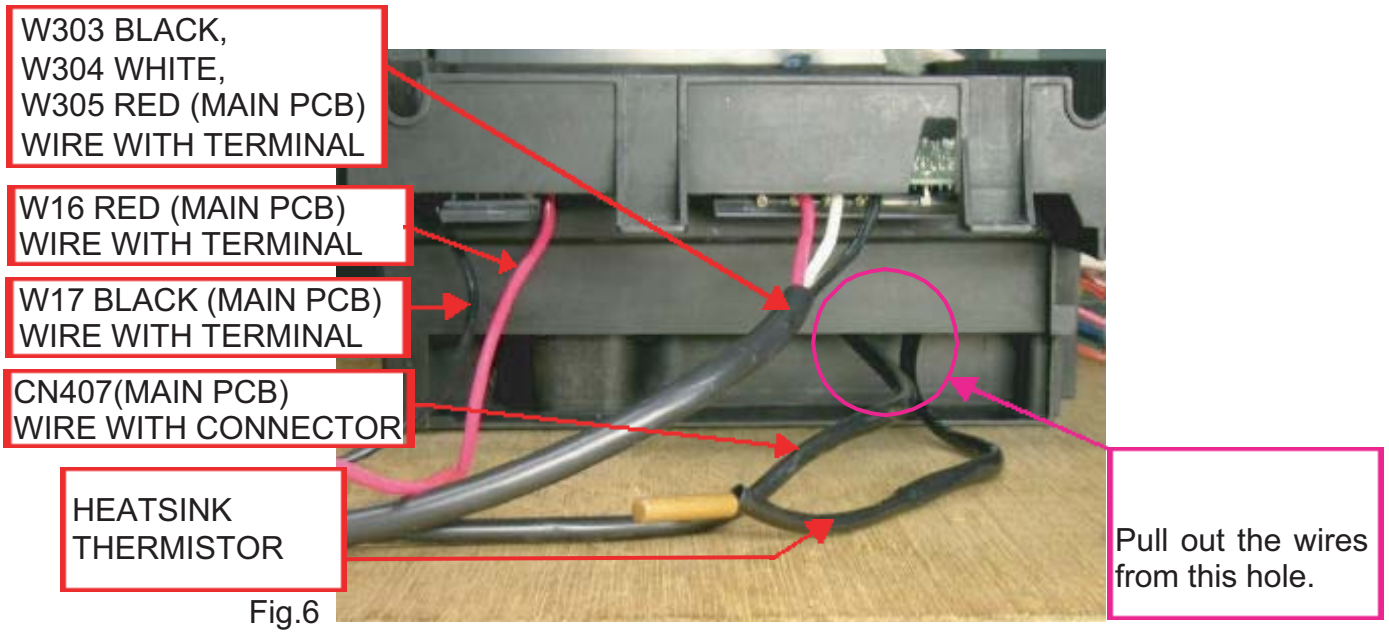

Fig.6

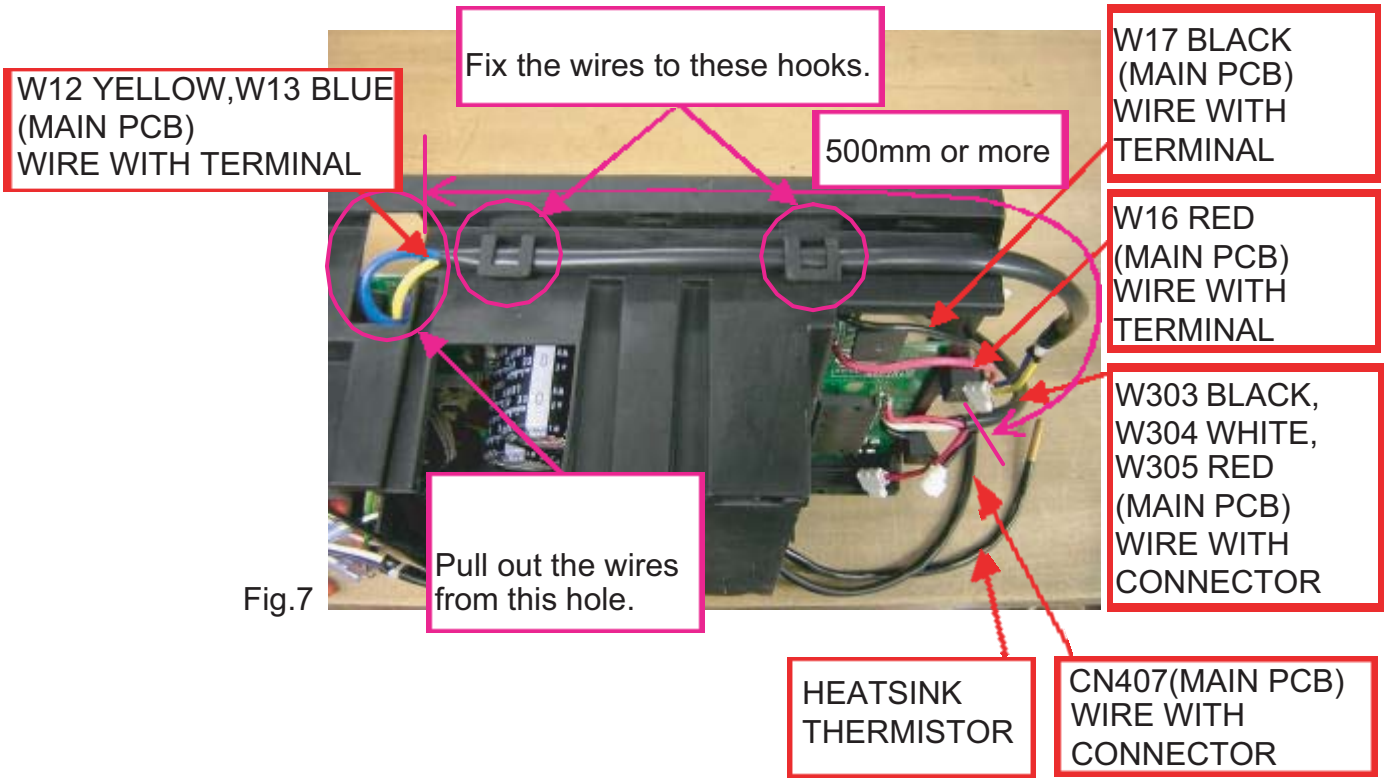

Fig.7

MODEL : AOU24RML
REGULATIONS

As shown in Fig.8, pull out the wires.

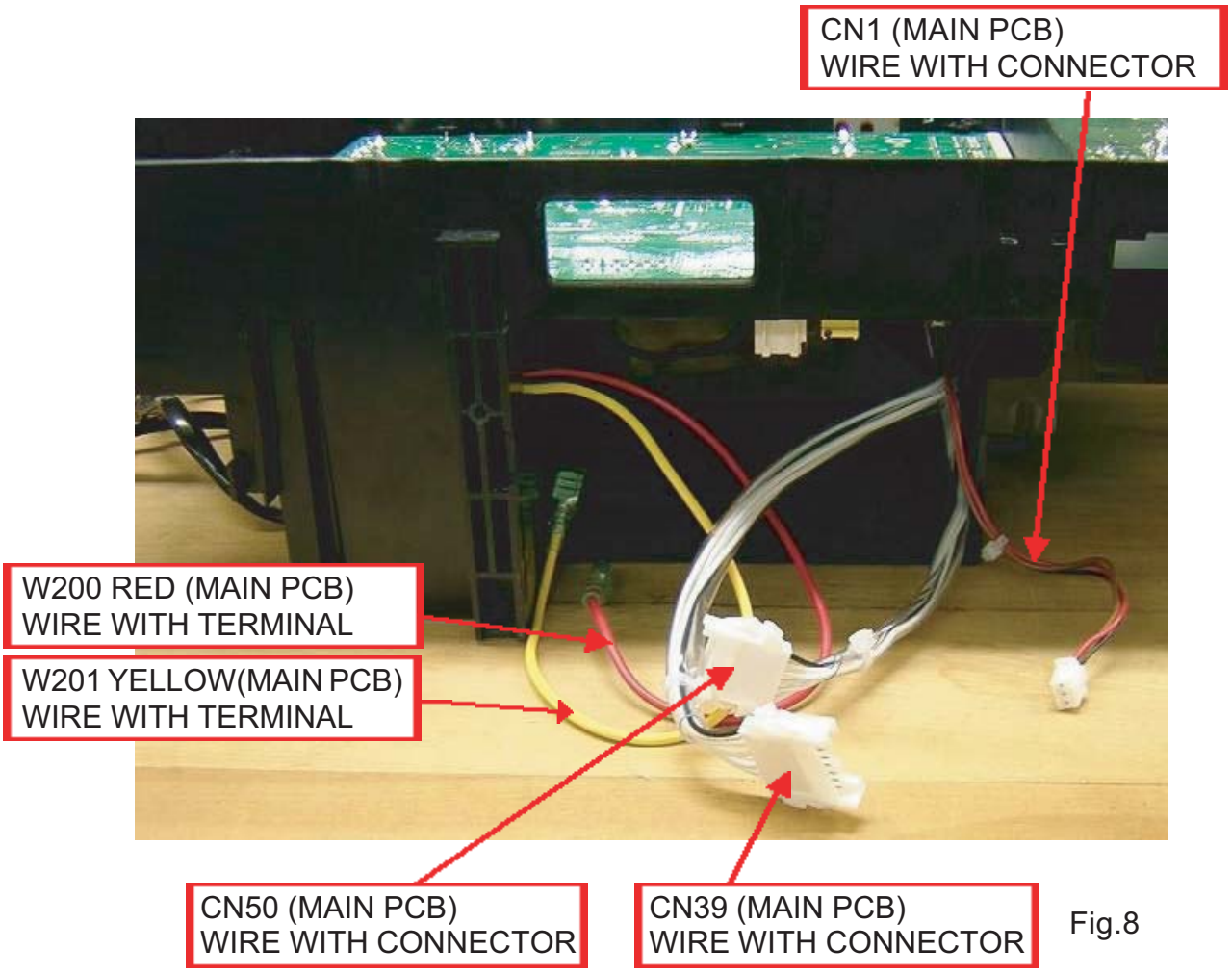

Fig.8

MODEL : AOU24RML

REGULATIONS
As shown in Fig.9-10, pull out the wires.

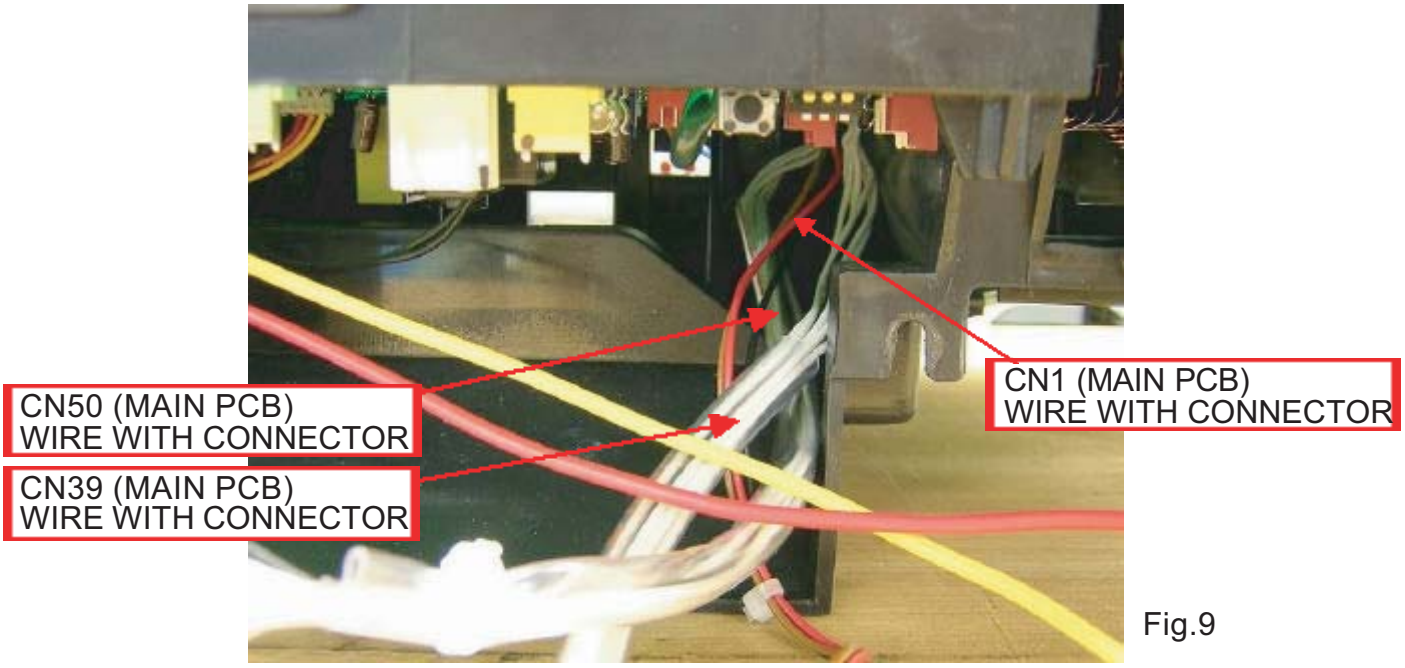

Fig.9

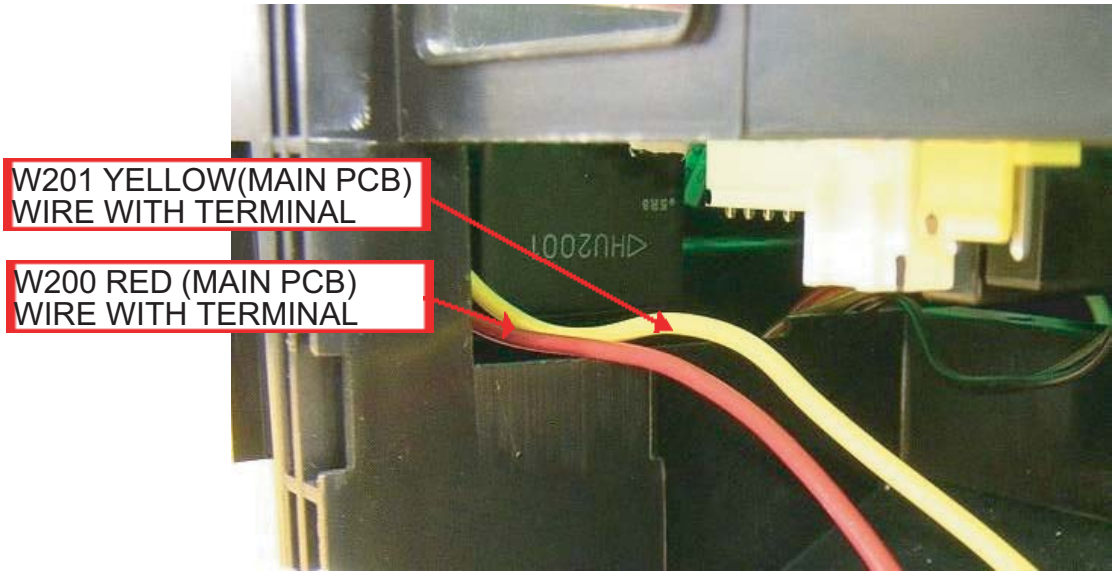

Fig.10

MODEL : AOU24RML

PROCESS Assemble WIRE WITH TERMINAL (ACTL, etc)

USED PARTS ①WIRE WITH TERMINAL

REGULATIONS

As shown in Fig.1 assemble WIRE WITH TERMINAL to INVERTER BOX A.

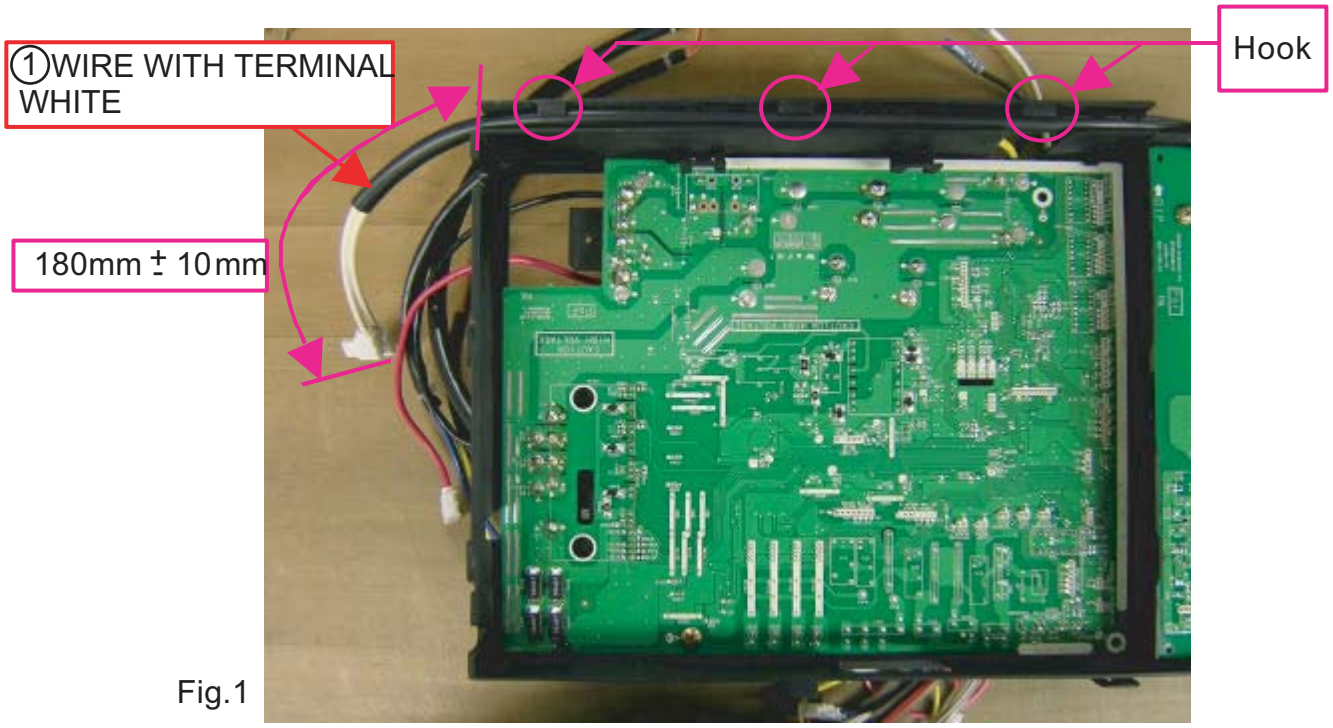

Fig.1

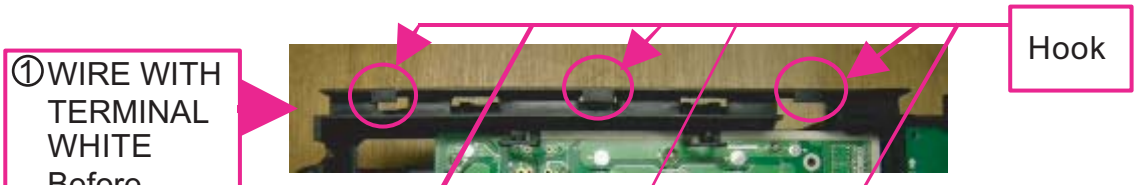

Fig.2

Fig.3

MODEL : AOU24RML

PROCESS Connect wires. (INVERTER BOX A)

USED PARTS
① EMI FILTER
② BINDER C

REGULATIONS

As shown in Fig1-2, assemble EMI FILTER. Turn of the wire is according as Fig.1.
As shown in Fig.2, certainly fix EMI FILTER to wires by BINDER.

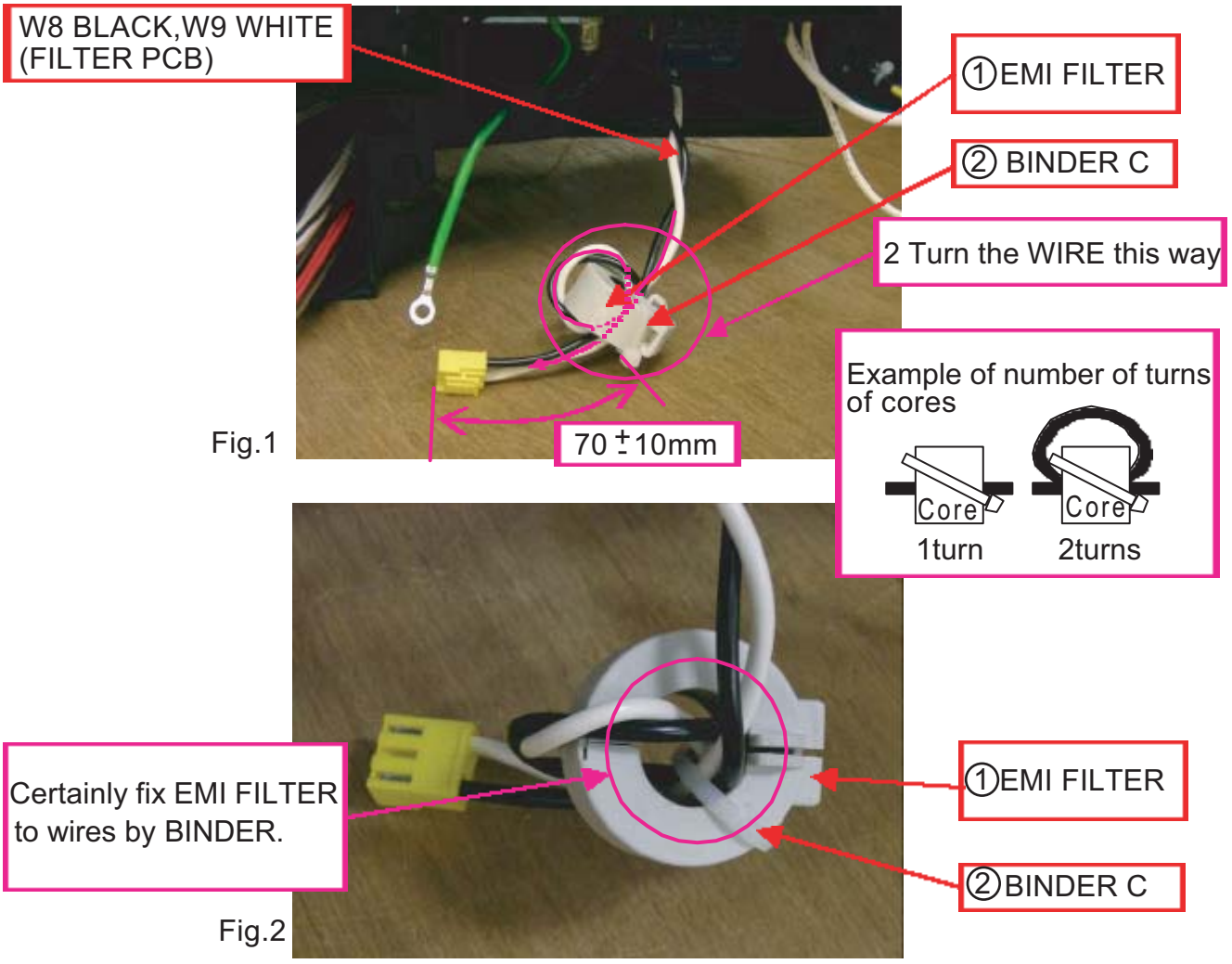

Fig.1

Fig.2

MODEL : AOU24RML

REGULATIONS
As shown in Fig.3, connect wires.

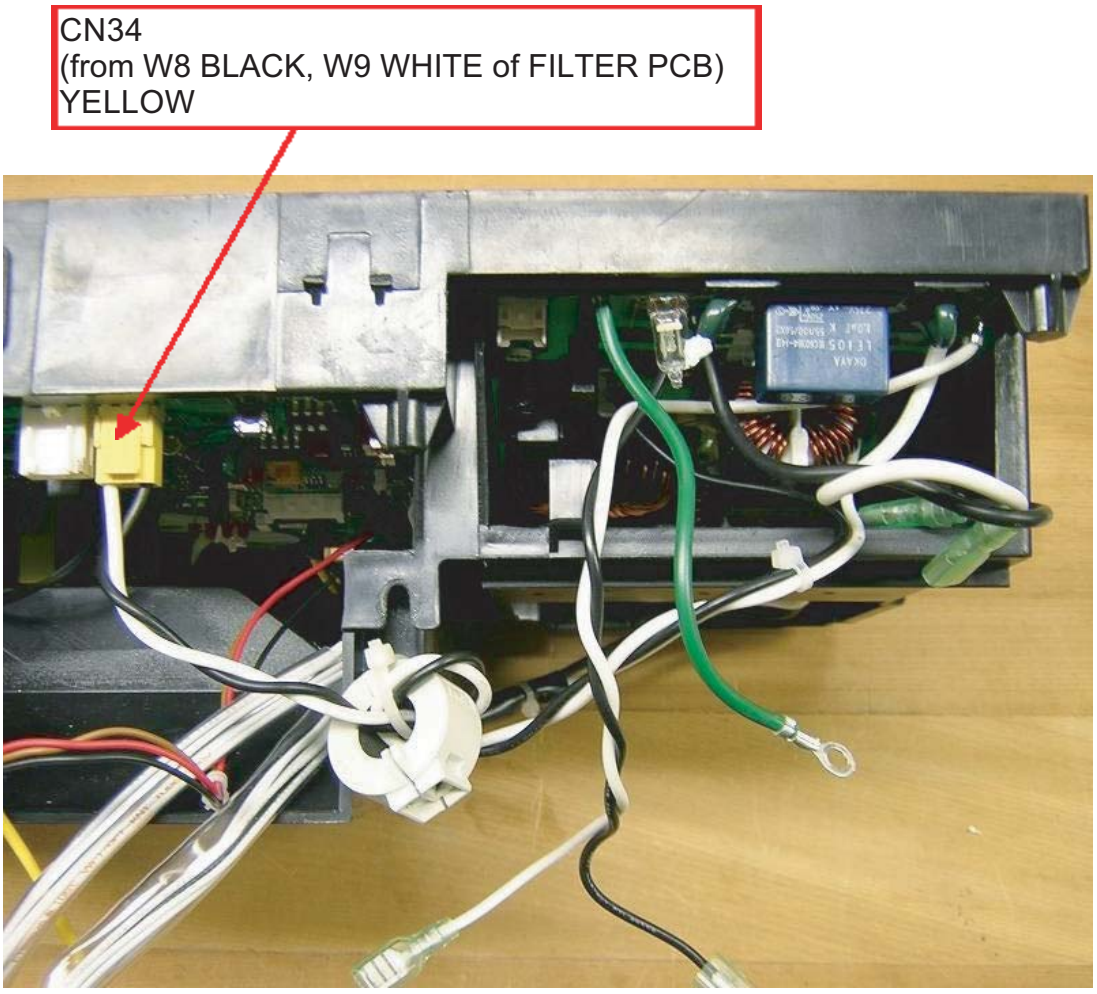

Fig.3

MODEL : AOU24RML

REGULATIONS
As shown in Fig.4-5, connect wires. PWB must not warp when you connect CN1.

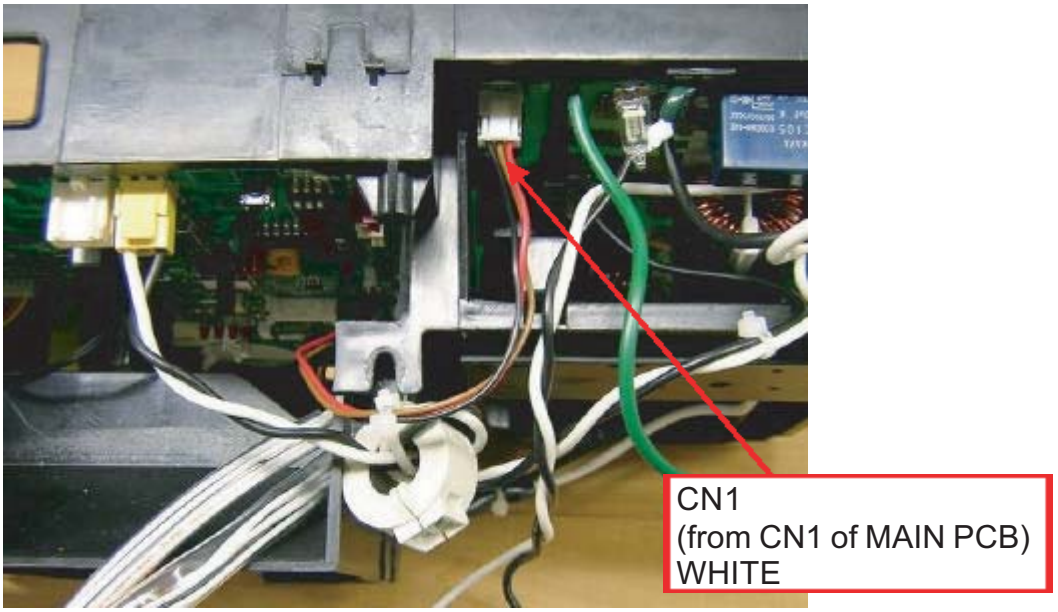

Fig.4

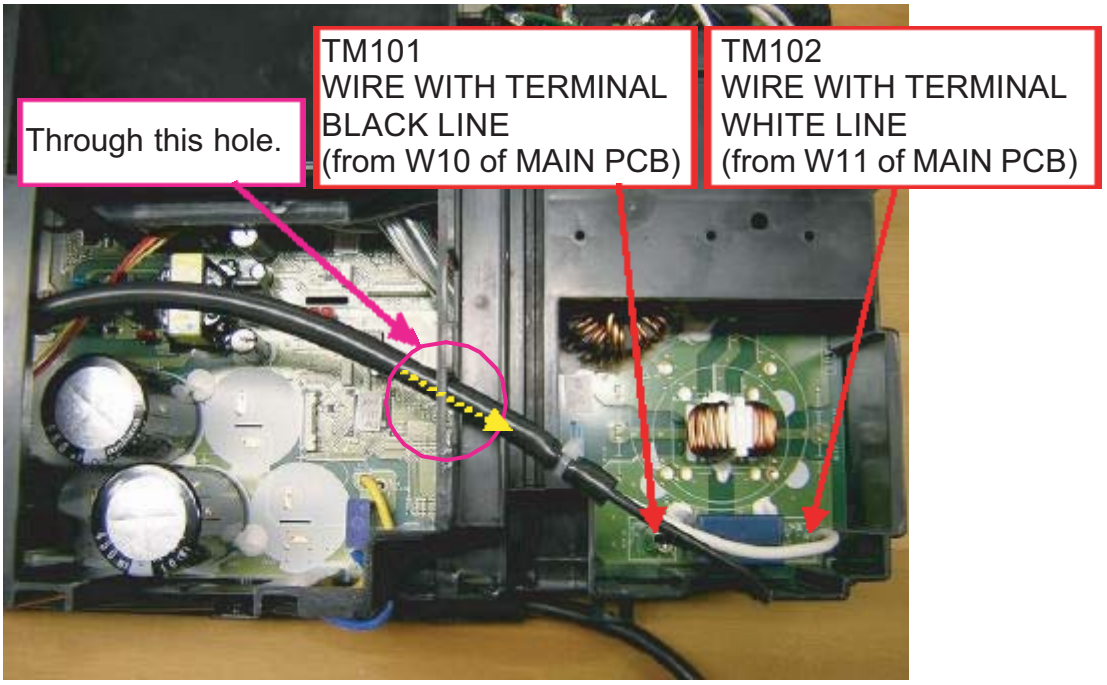

Fig.5

MODEL : AOU24RML

PROCESS Fix the wires to INVERTER BOX A
(HEATSINK THERMISTOR, etc)

REGULATIONS

As shown in Fig.1,fix the wires to INVERTER BOX A.

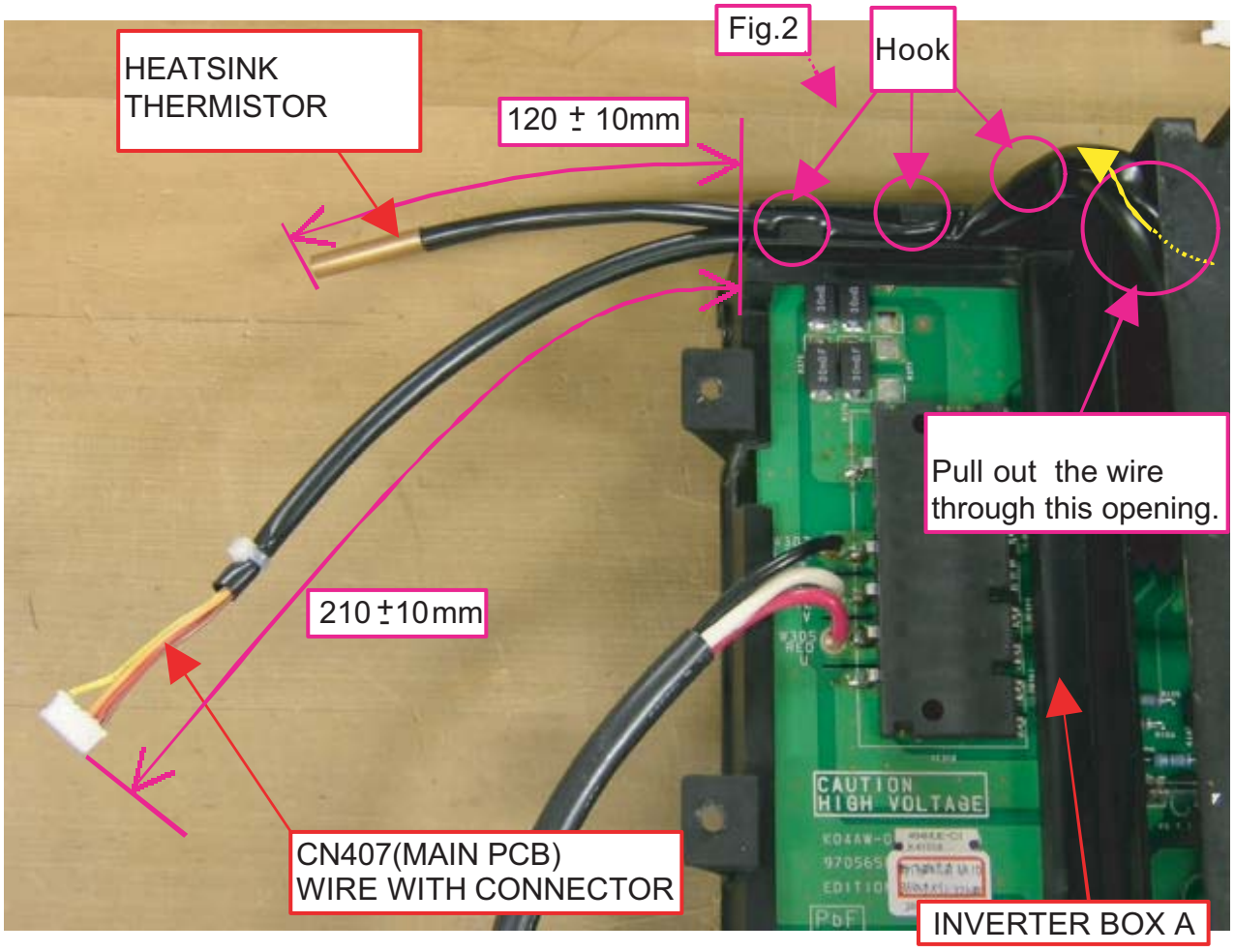

Fig.1

MODEL : AOU24RML
REGULATIONS
As shown in Fig.2, fix the wires to INVERTER BOX A.

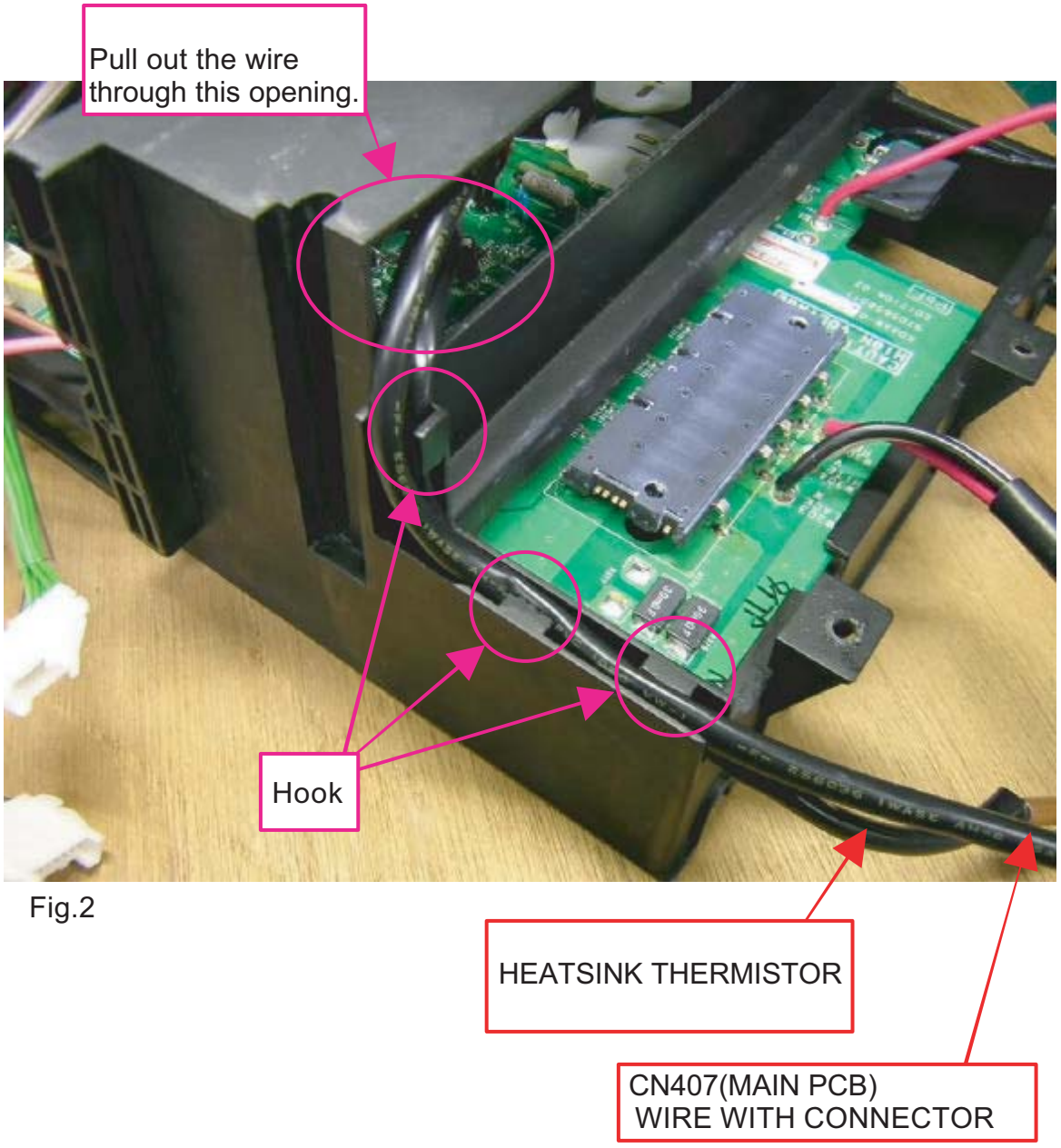

Fig.2

MODEL : AOU24RML

REGULATIONS

Tighten screw as shown in figure.

Check no miss tightening !
Check no float of parts !

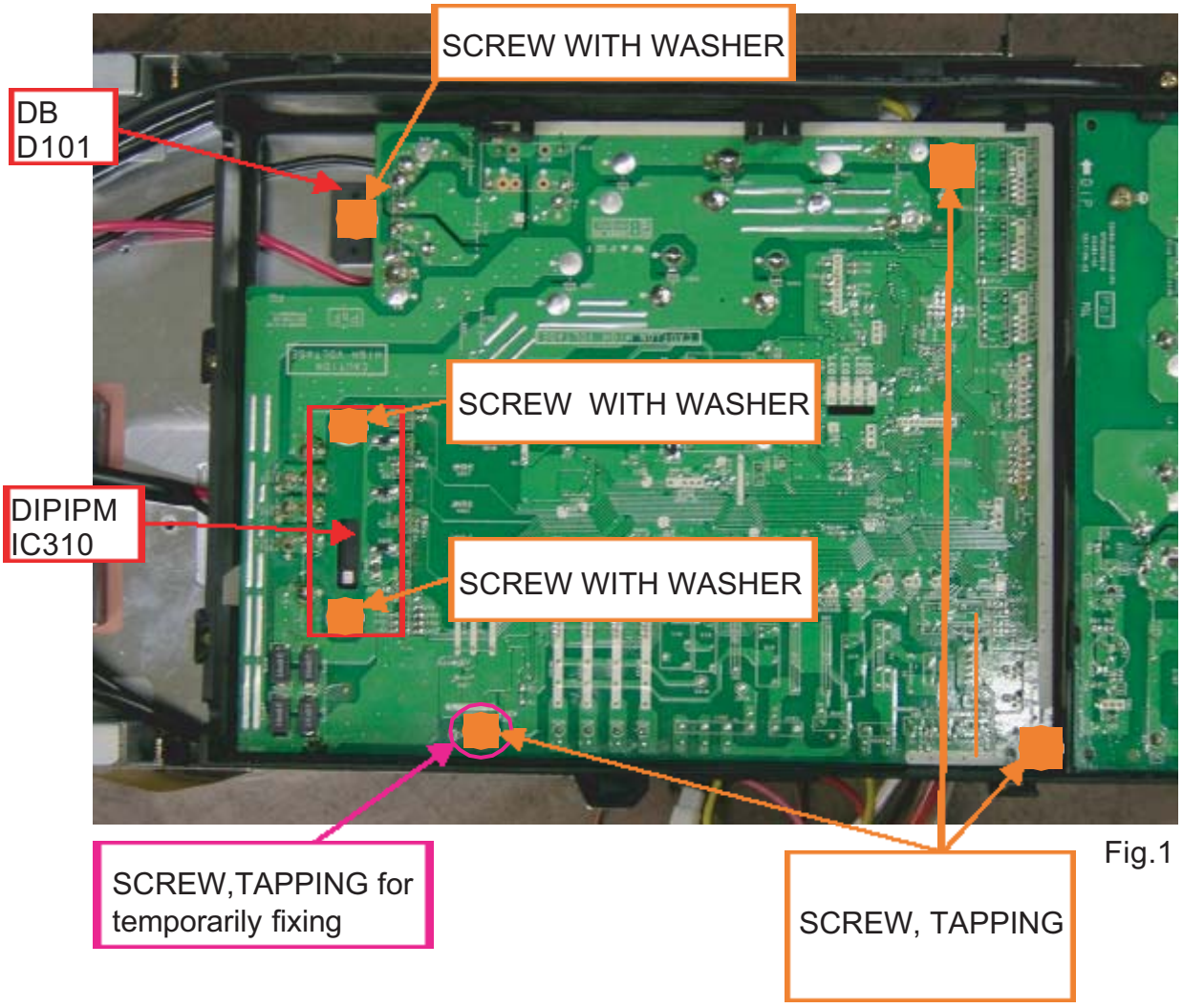

Fig.1

MODEL : AOU24RML

PROCESS Bind WIRE WITH CONNECTOR (COMP WIRE)

USED PARTS ①BINDER C

REGULATIONS

As shown in the figures, set WIRE WITH CONNECTOR and bind it to INVERTER BOX A. The wire must not come in contact with the HOLDER(THERMO) SUS304 CSP-H T0.5

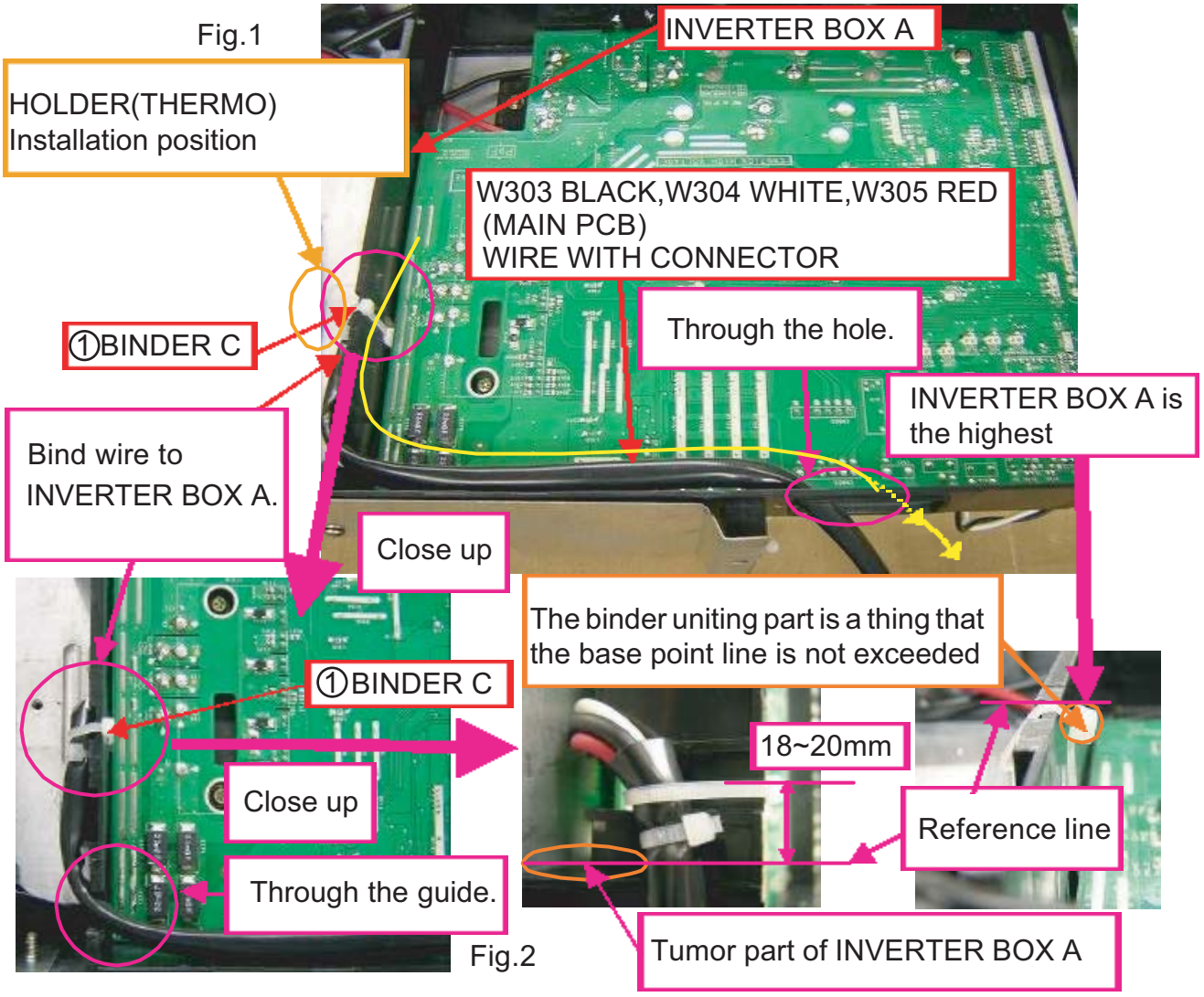

MODEL : AOU24RML

PROCESS Connect wires.
(D,PWR(BRIDGE), ACTPM)

USED PARTS ①EMI FILTER
②BINDER C

REGULATIONS

As shown in figures, assemble EMI FILTER. Turn of the wire is according as Fig.3.

As shown in Fig.2, certainly fix EMI FILTER to wires by BINDER.

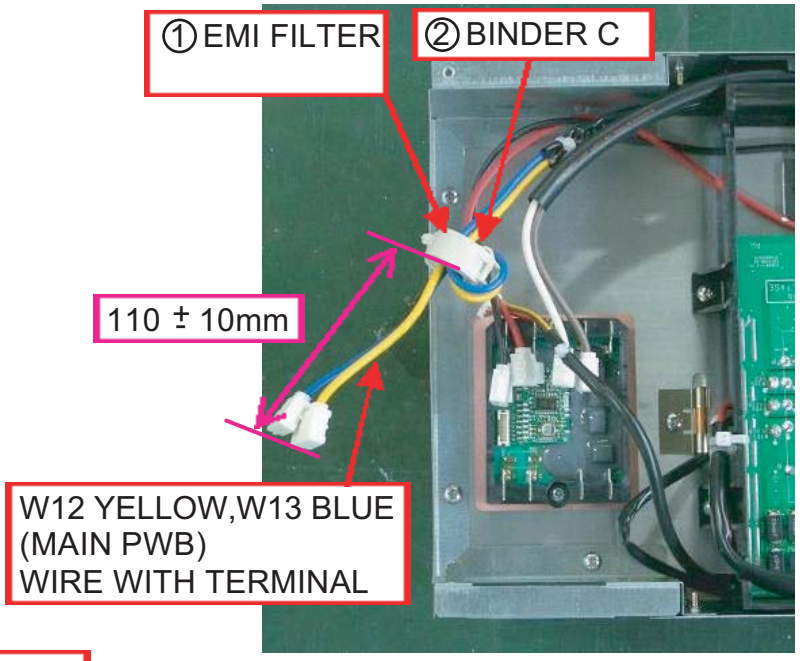

Fig.1

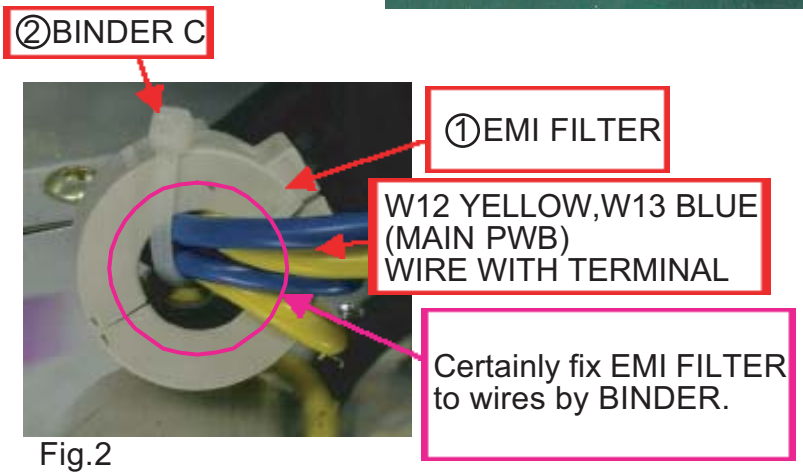

Fig.2

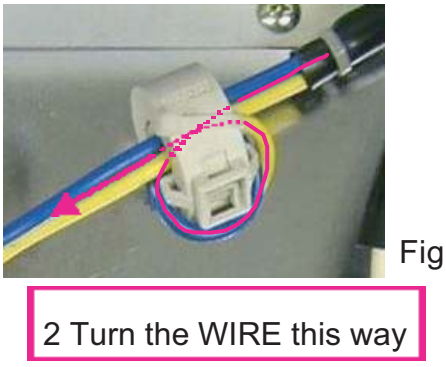

Fig.3

MODEL : AOU24RML

REGULATIONS

As shown in Fig.4, connect wires.

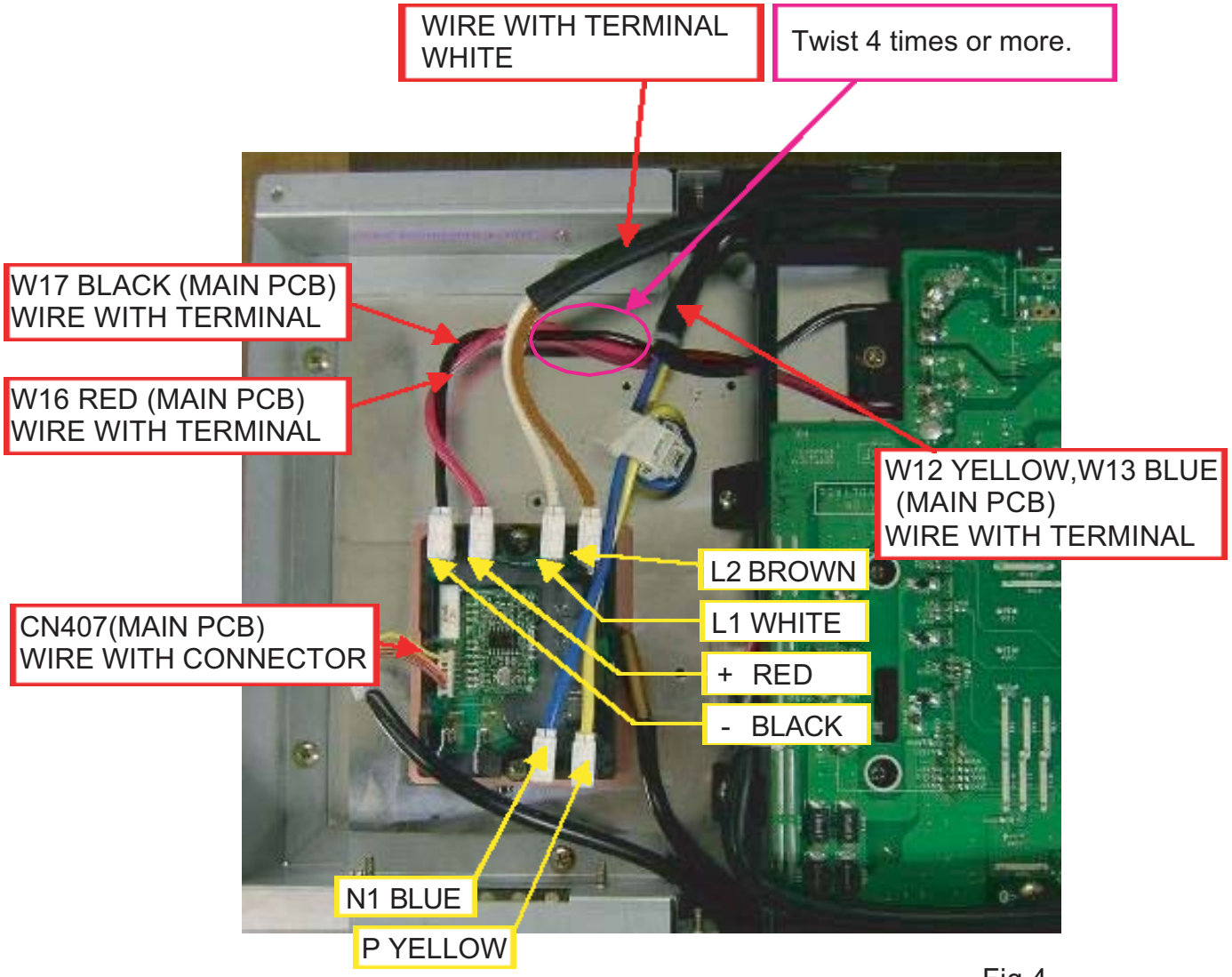

Fig.4

MODEL : AOU24RML

REGULATIONS

As shown in Fig.5, bind 3 types of wires.

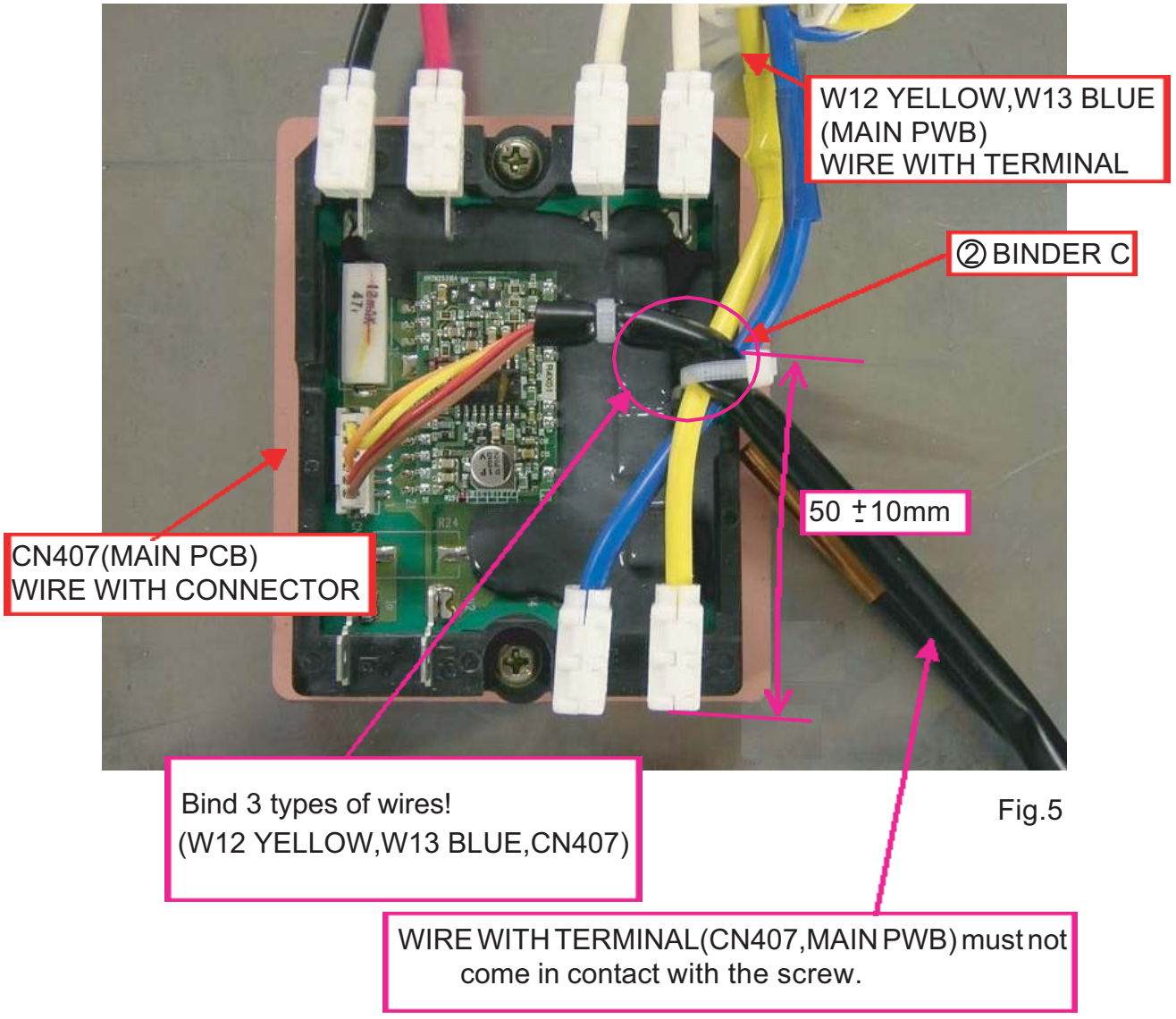

Fig.5

MODEL : AOU24RML
PROCESS Connect wires. (TERMINAL)

REGULATIONS

As shown in figures, connect wires.
A right picture shows the example of two times of the twist.

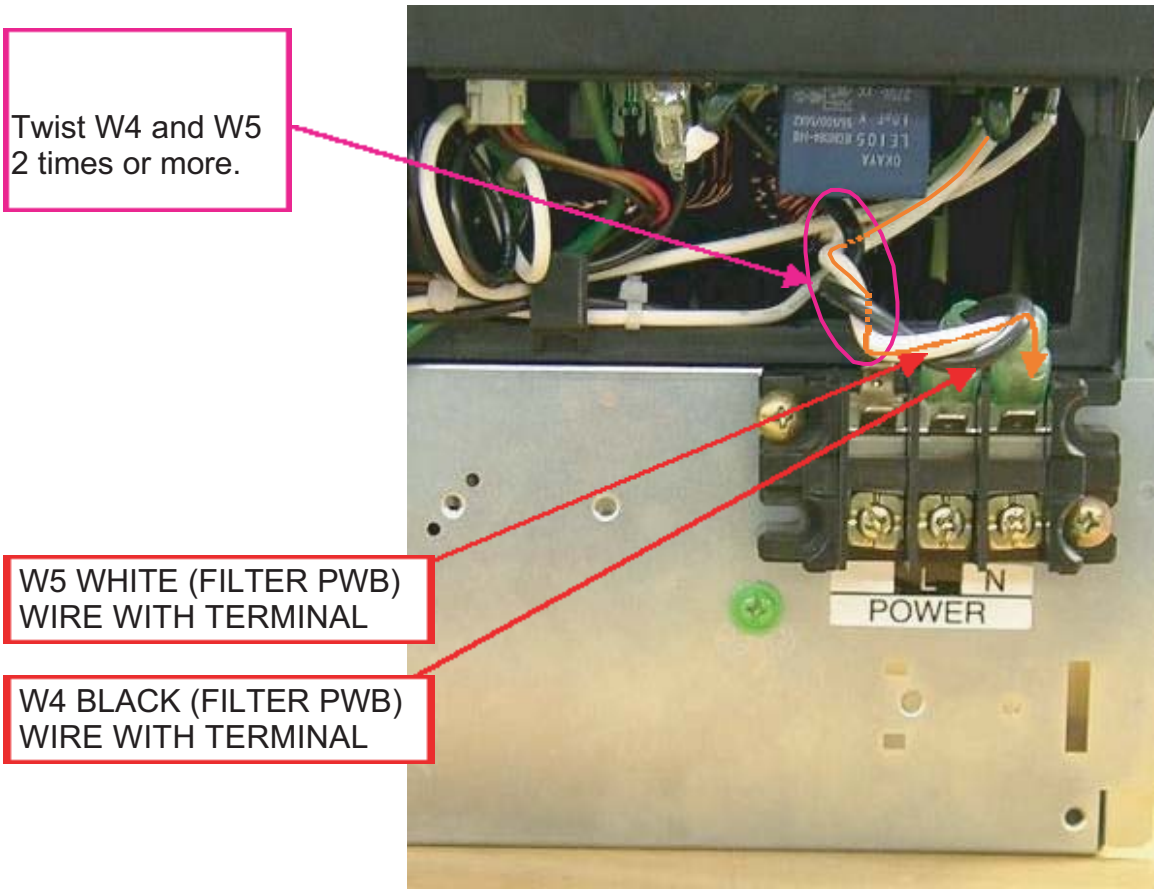

Fig.1

MODEL : AOU24RML

PROCESS Connect wires.
(PCB ASSY(MAIN),INVERTER BOX D)

REGULATIONS

As shown in figures, connect wires.

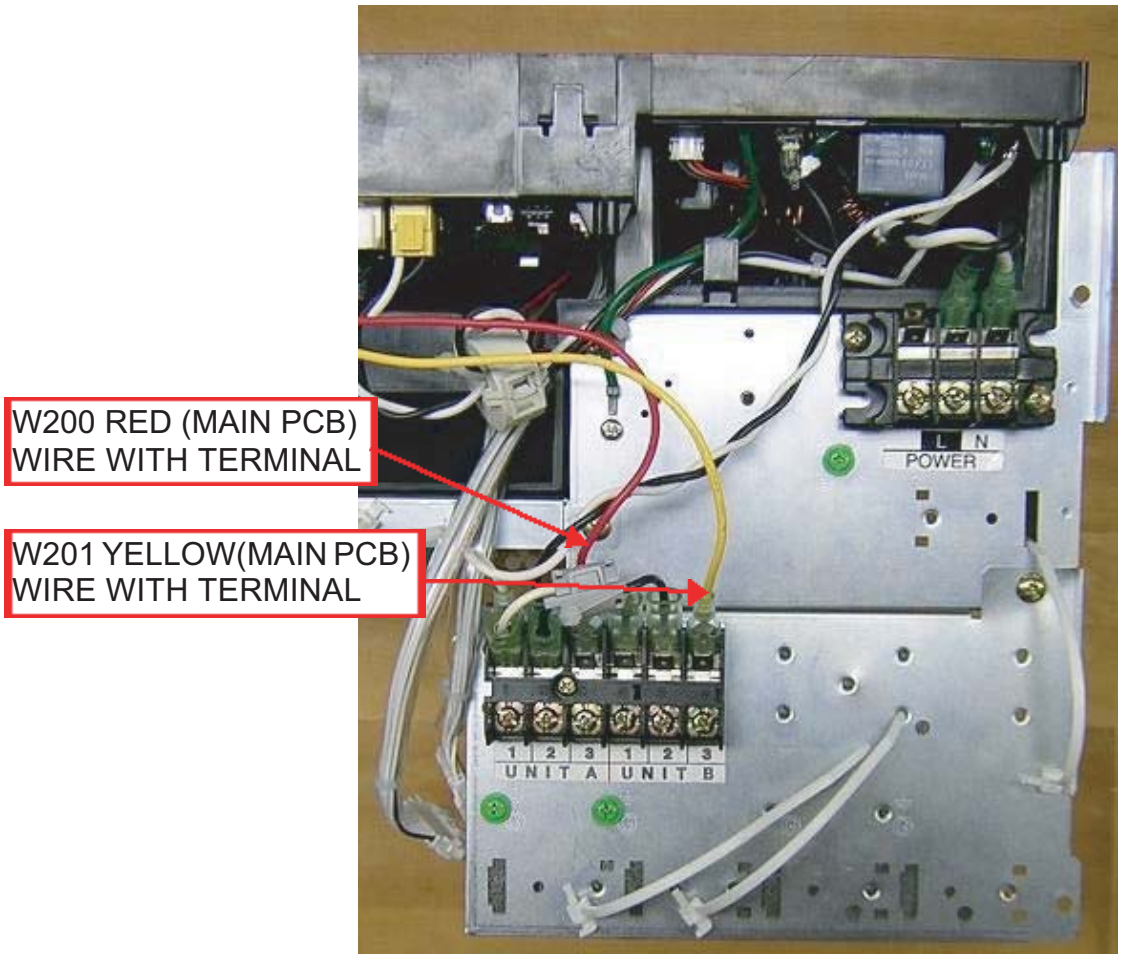

Fig.1

MODEL : AOU24RML

PROCESS Bind wires.

USED PARTS ①BINDER C

REGULATIONS

As shown in figures, bind 4 types of wires.

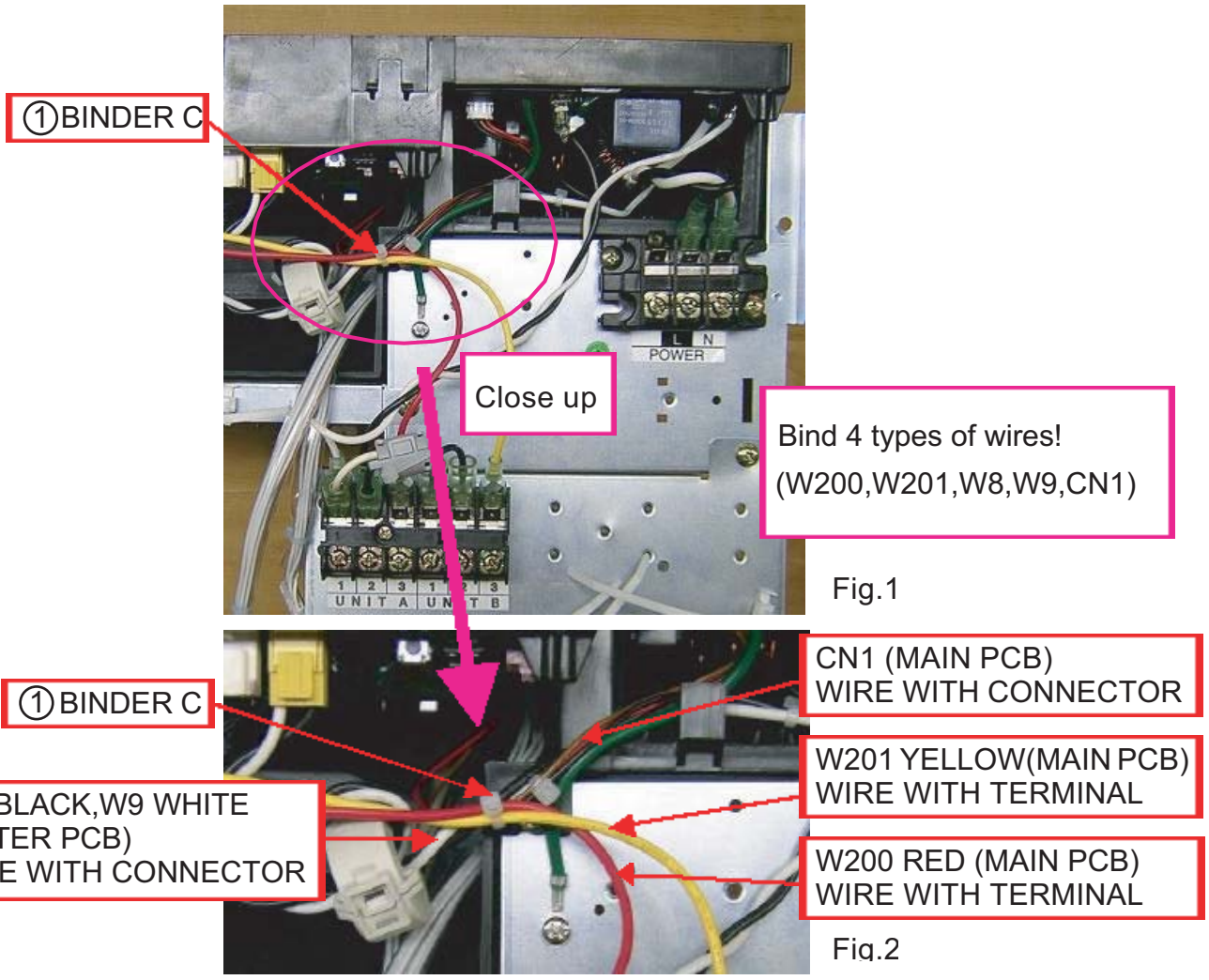

Fig.1

Fig.2

MODEL : AOU36RML

USED PARTS
① INVERTER BOX A
② FILTER PCB
③ SCREW,TAPPING

PROCESS Assemble PWB ASSY (FILTER PCB)

REGULATION

As shown in Fig.1, assemble PWB ASSY to INVERTER BOX A.
As shown in Fig.2, pull out the wires of PWB ASSY.
Don't sandwich ARRESTER (SA100) between PWB and INVERTER BOX A.

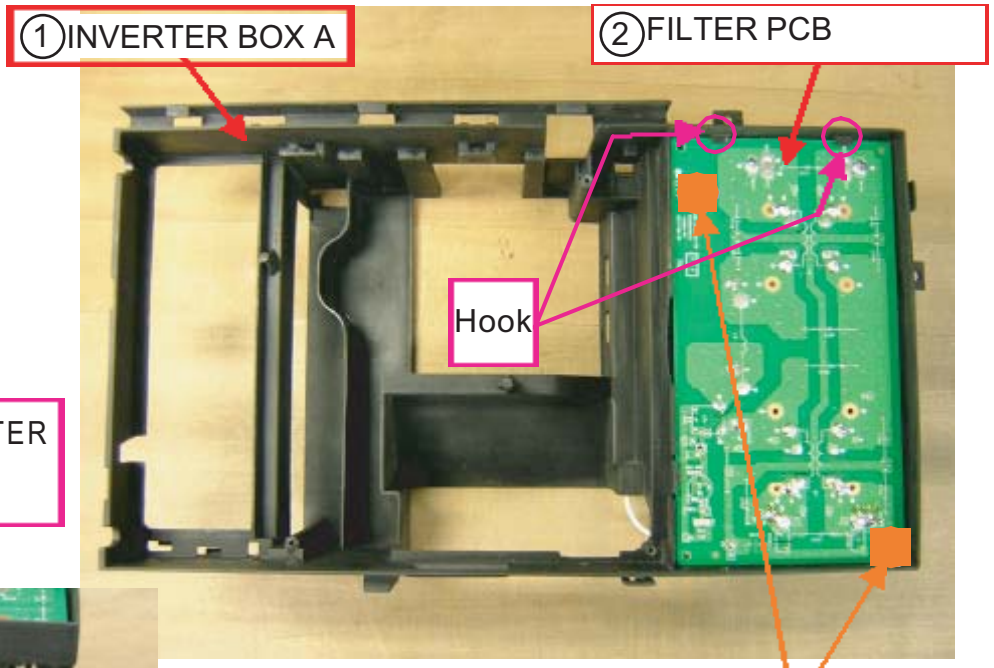

Fig.1

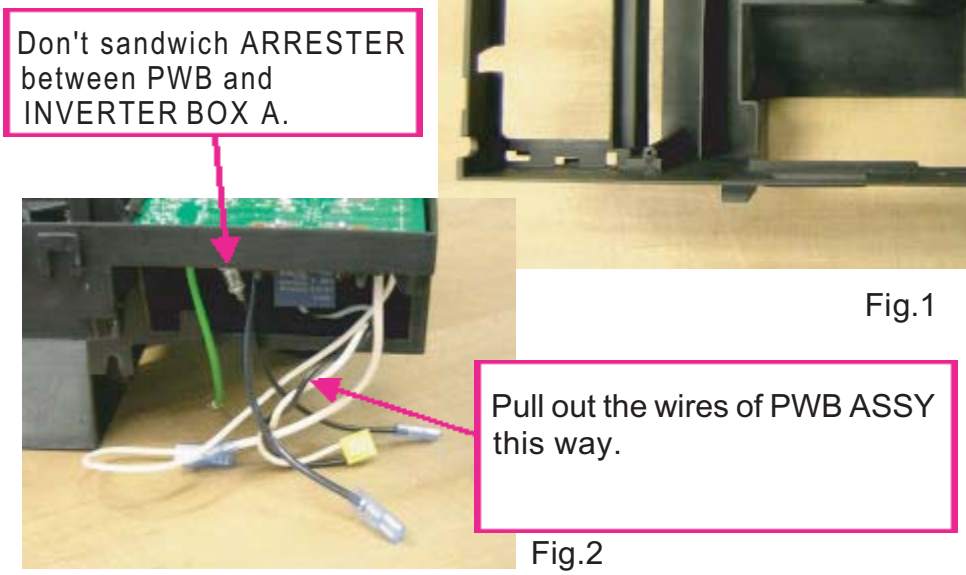

Fig.2

MODEL : AOU36RML

PROCESS Assemble PCB ASSY.
MAIN PCB

USED PARTS
①INVERTER BOX A
②MAIN PCB
③SCREW,TAPPING

REGULATIONS

Certainly set PWB ASSY under the 3 hooks of INVERTER BOX A.

Before it is temporary fix of PWB ASSY, As shown in the Fig.3-6, pull out the wires of PWB ASSY.

After it is temporary fix of PWB ASSY, As shown in the Fig.7-11, pull out the wires of PWB ASSY.

Don't forget to take a cushion D101 (DIODE BRIDGE).

Don't bend foot D101 (DIODE BRIDGE).

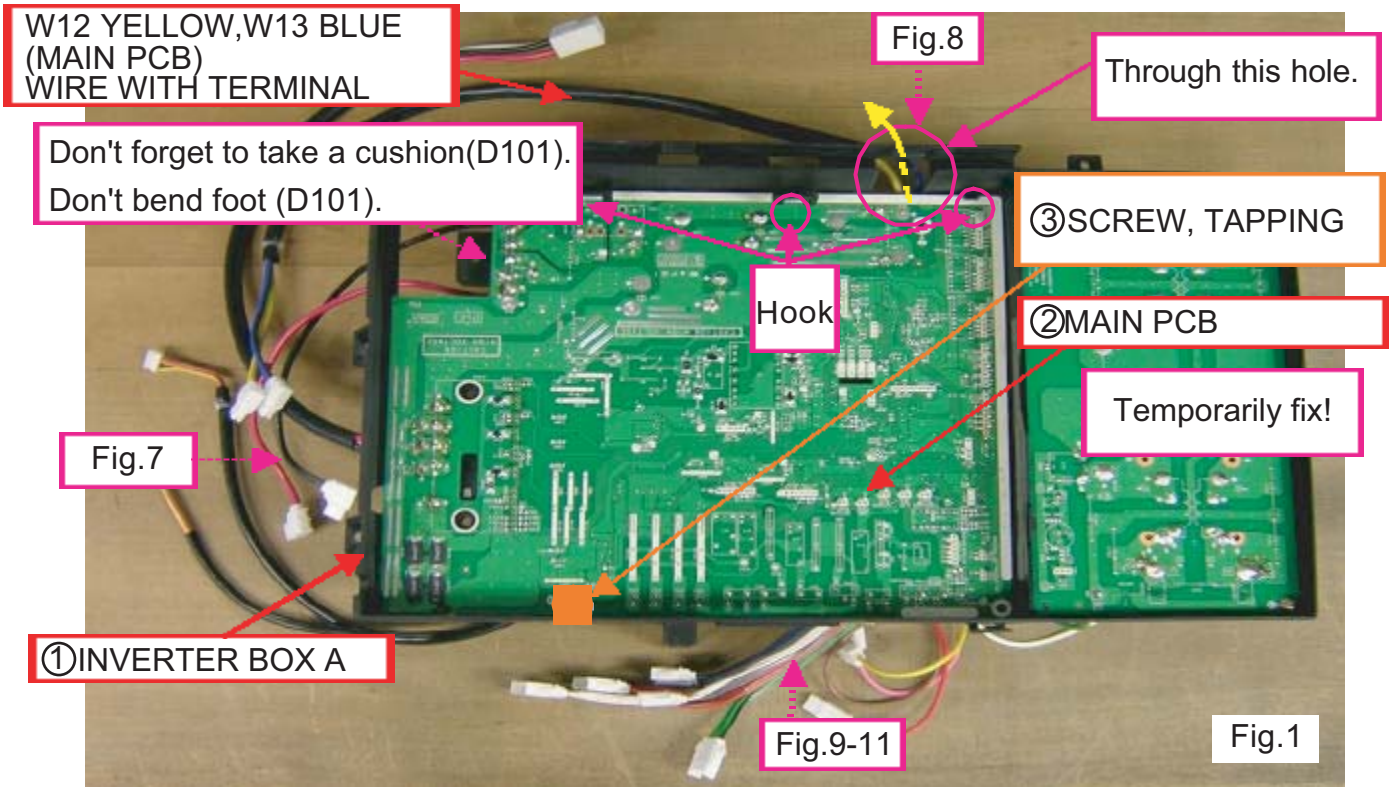

MODEL : AOU36RML

REGULATIONS

As shown in Fig.2, Twist W21 and W22 10 times or more.

A right picture shows the example of two times of the twist.

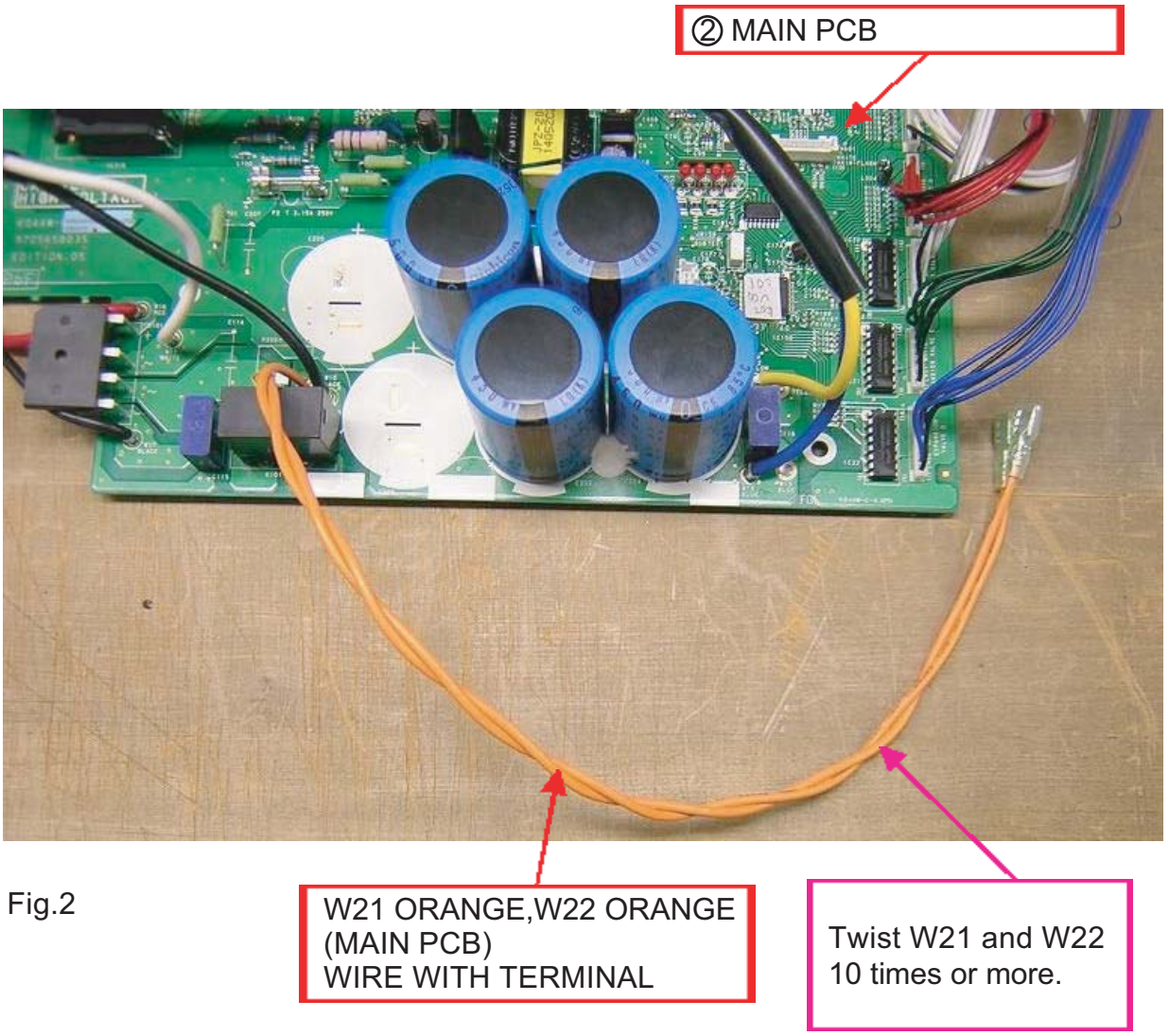

Fig.2

MODEL : AOU36RML

REGULATIONS

As shown in Fig.3, pull out the wires.

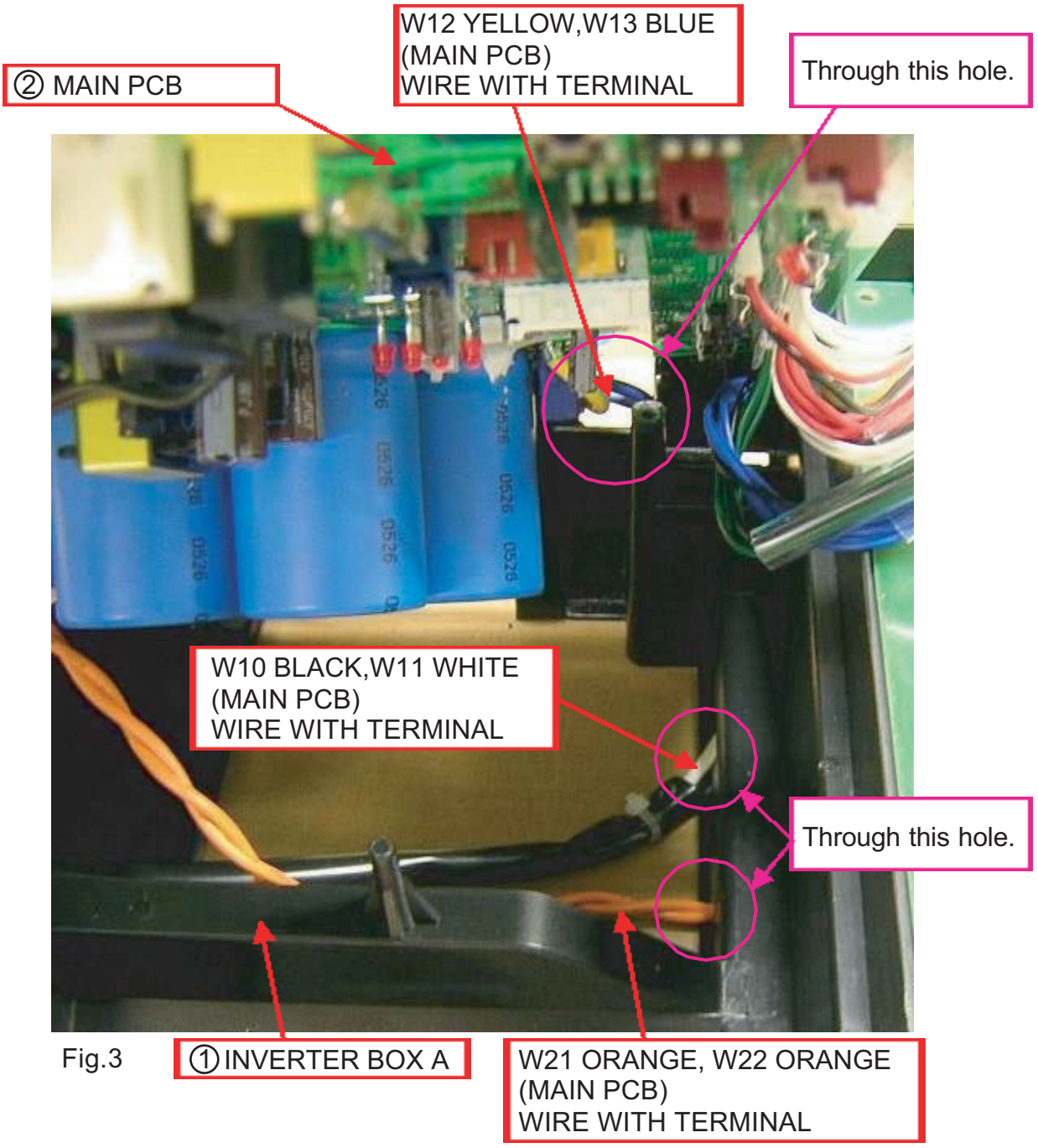

Fig.3

MODEL : AOU36RML

REGULATIONS
As shown in Fig.4, pull out the wires.

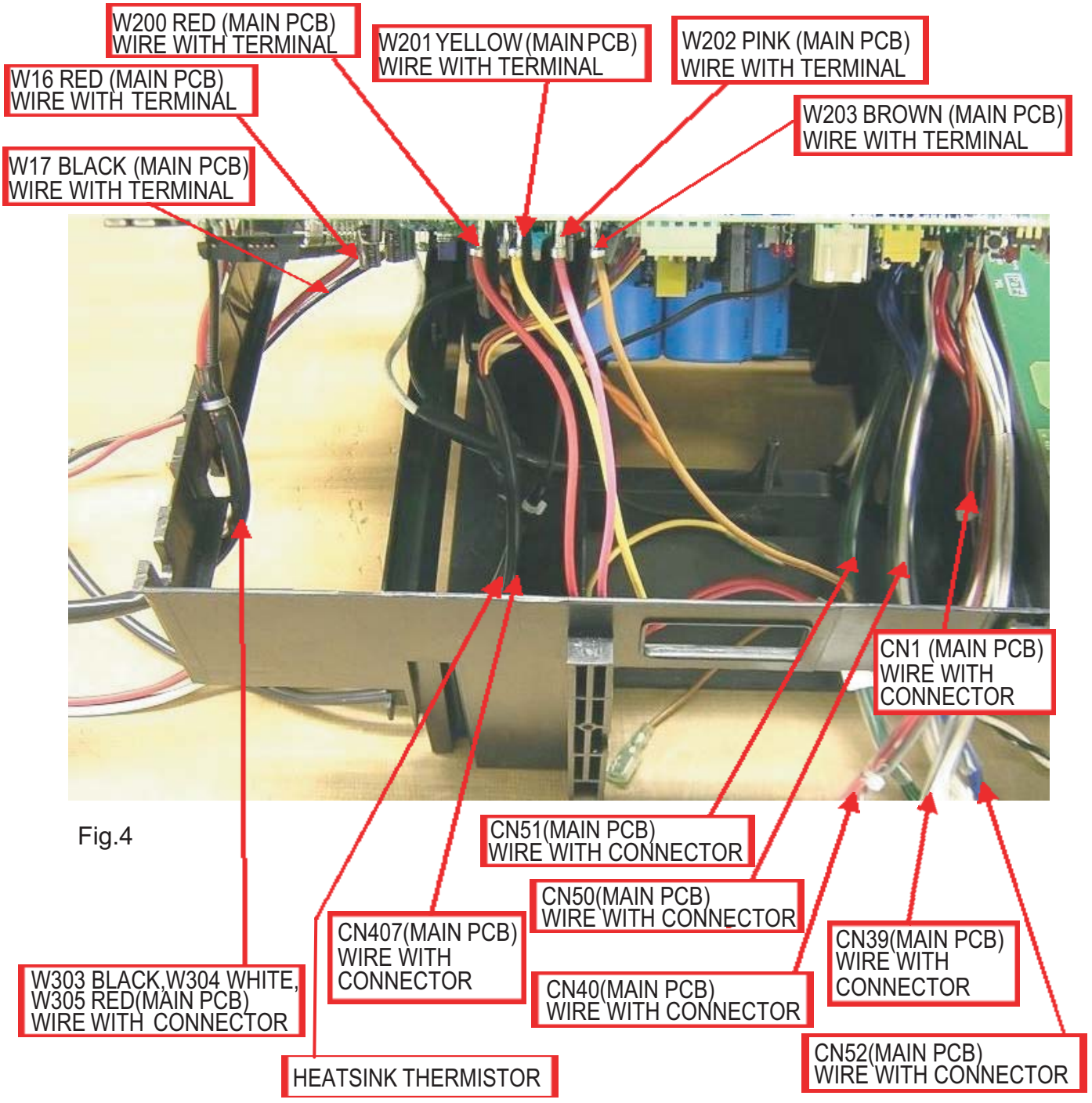

Fig.4

MODEL : AOU36RML
REGULATIONS
As shown in Fig.5-6, pull out the wires.

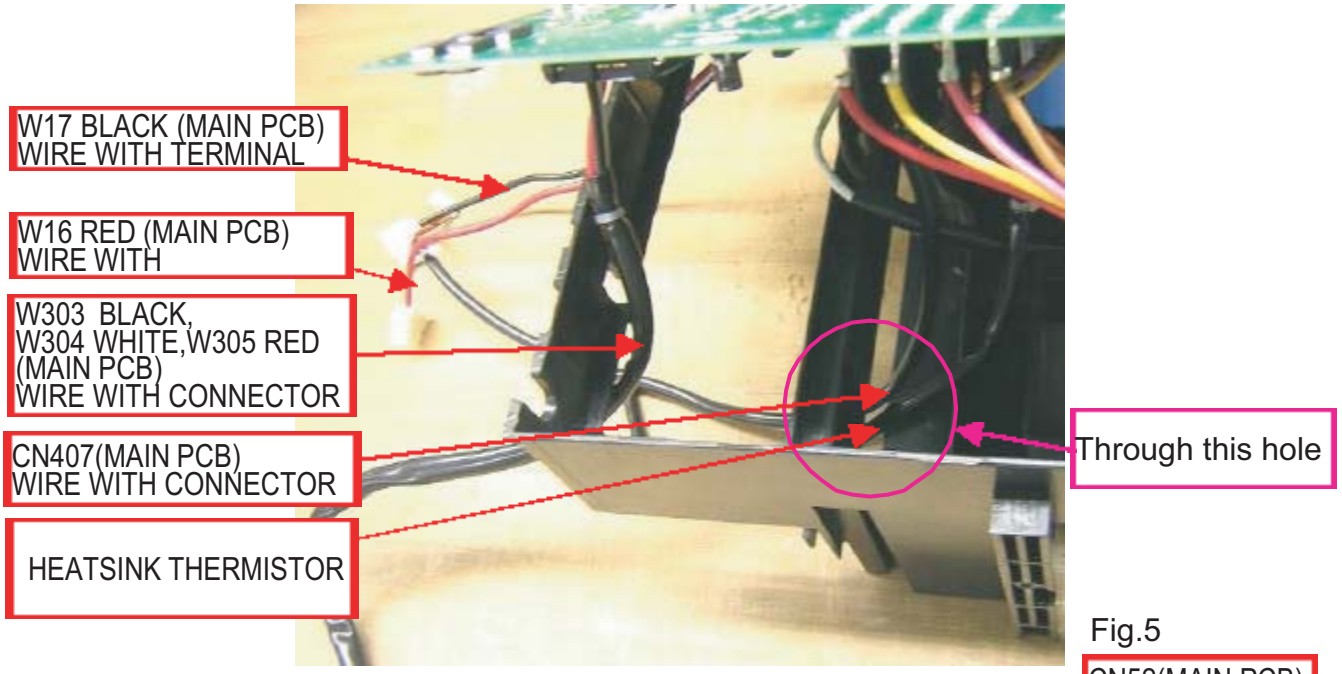

Fig.5

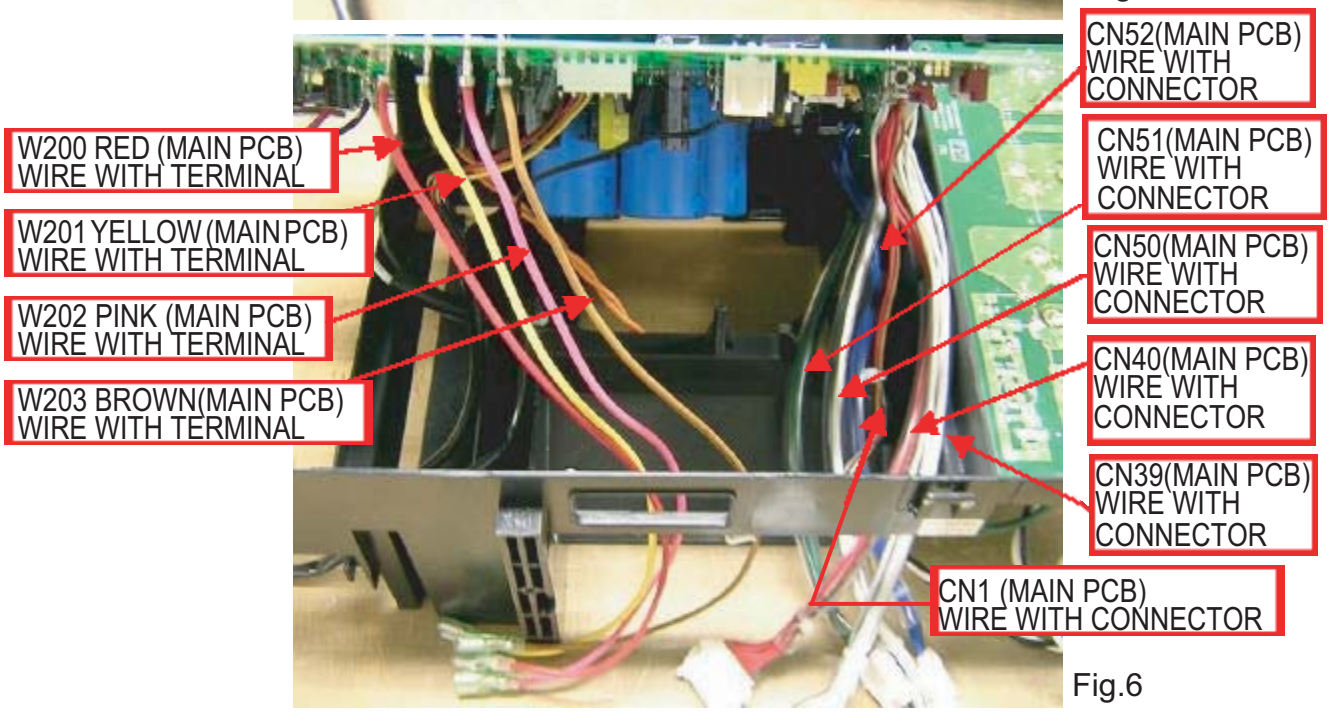

Fig.6

MODEL : AOU36RML

REGULATIONS

As shown in Fig.7, pull out the wires.

As shown in the Fig.8, pull out the wires and fix them.

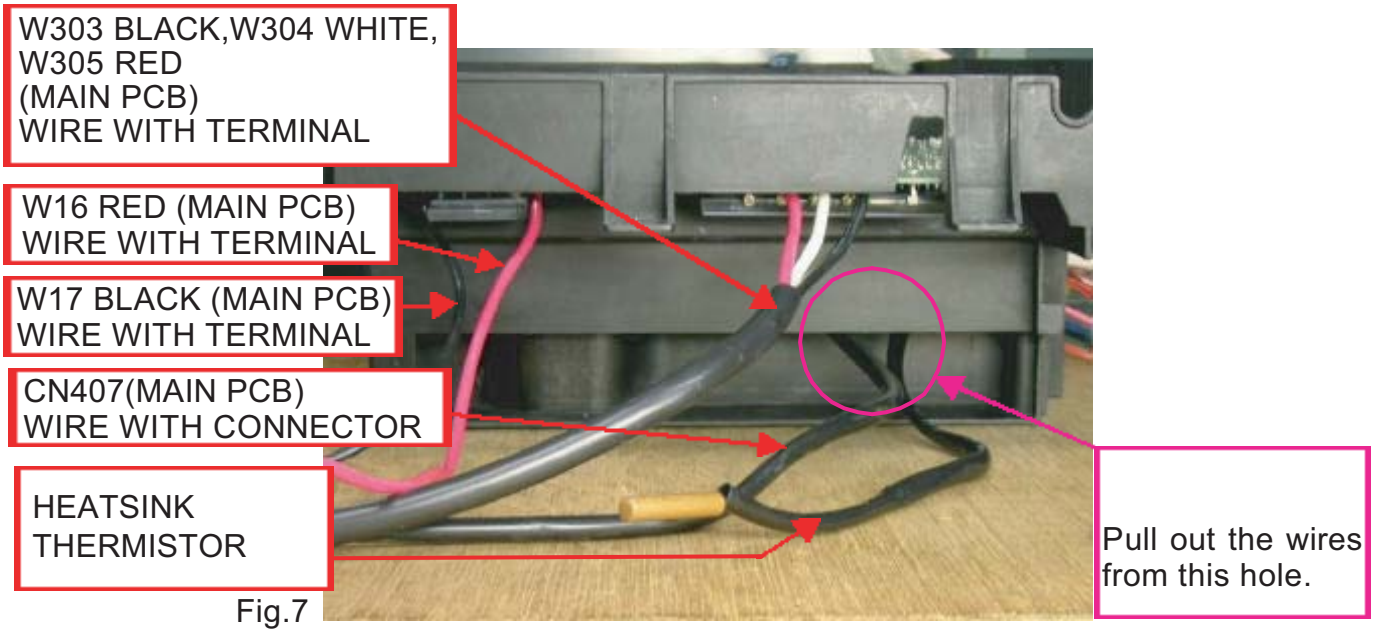

Fig.7

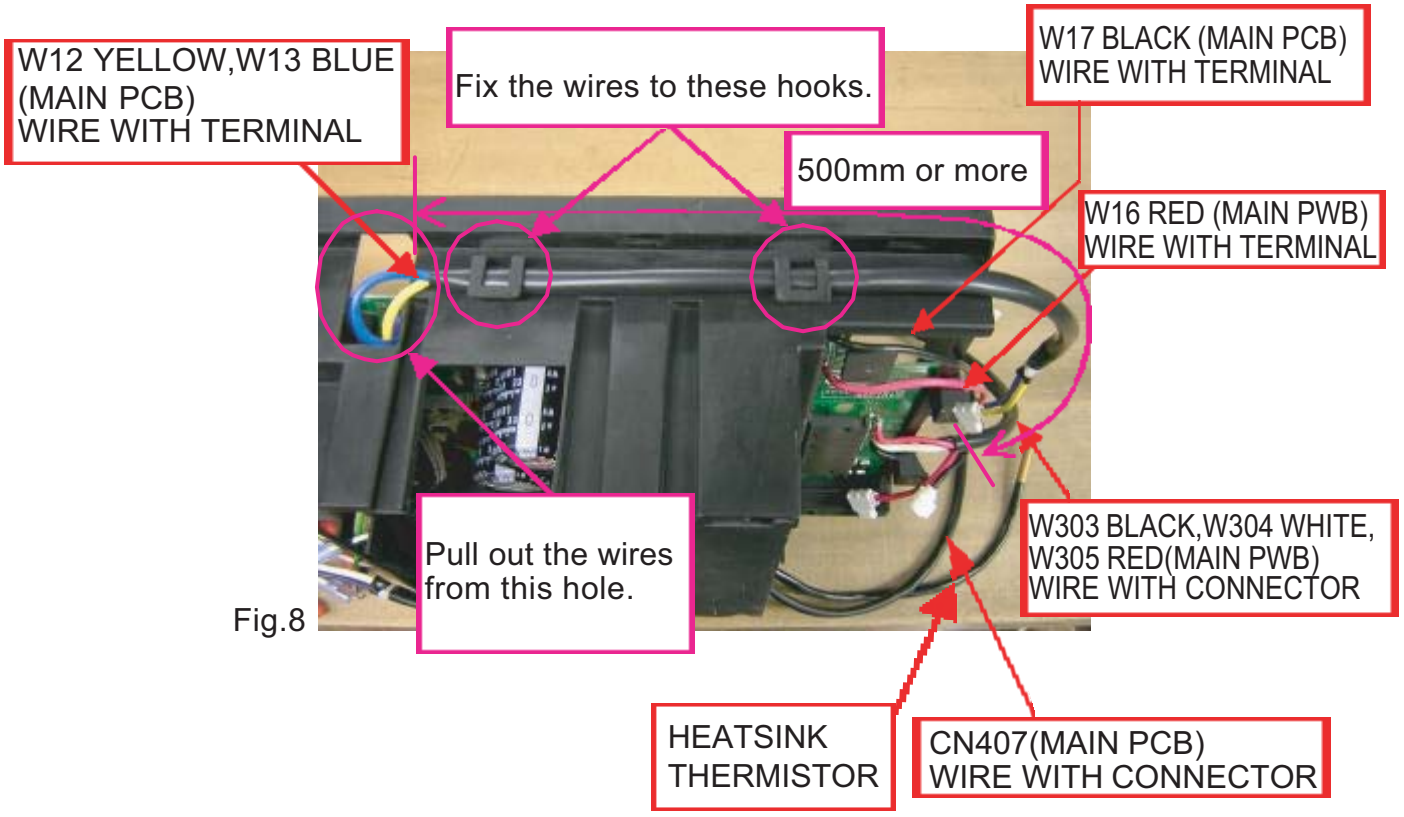

Fig.8

MODEL : AOU36RML

REGULATIONS

As shown in Fig.9, pull out the wires.

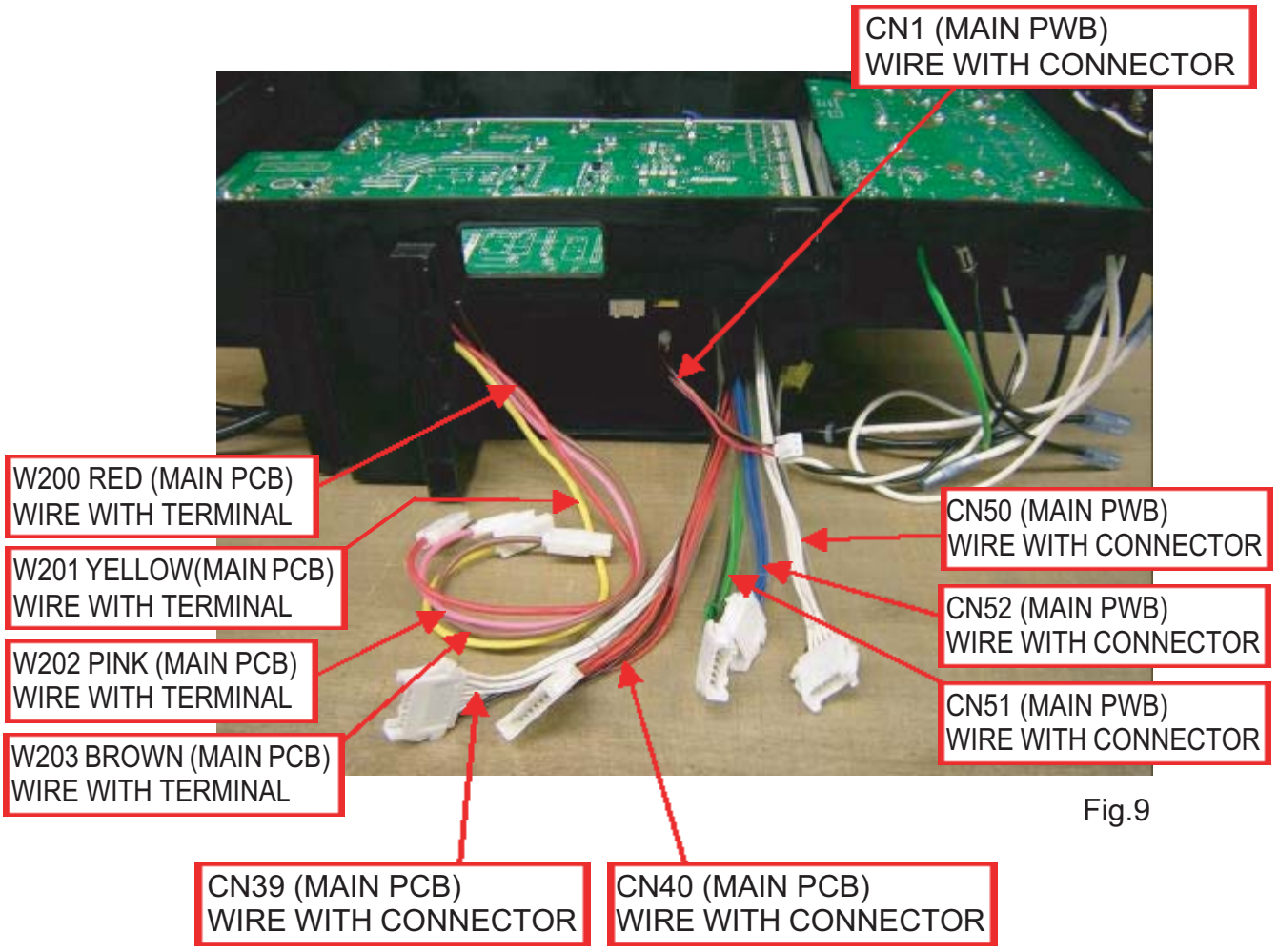

Fig.9

MODEL : AOU36RML
REGULATIONS
As shown in Fig.10-11, pull out the wires.

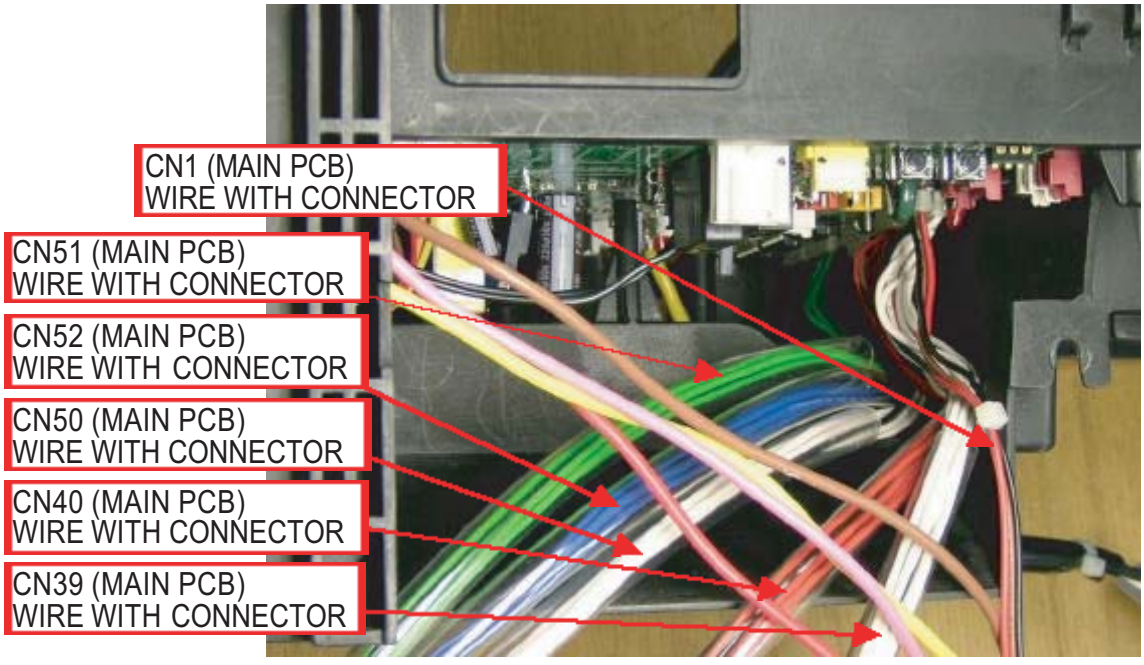

Fig.10

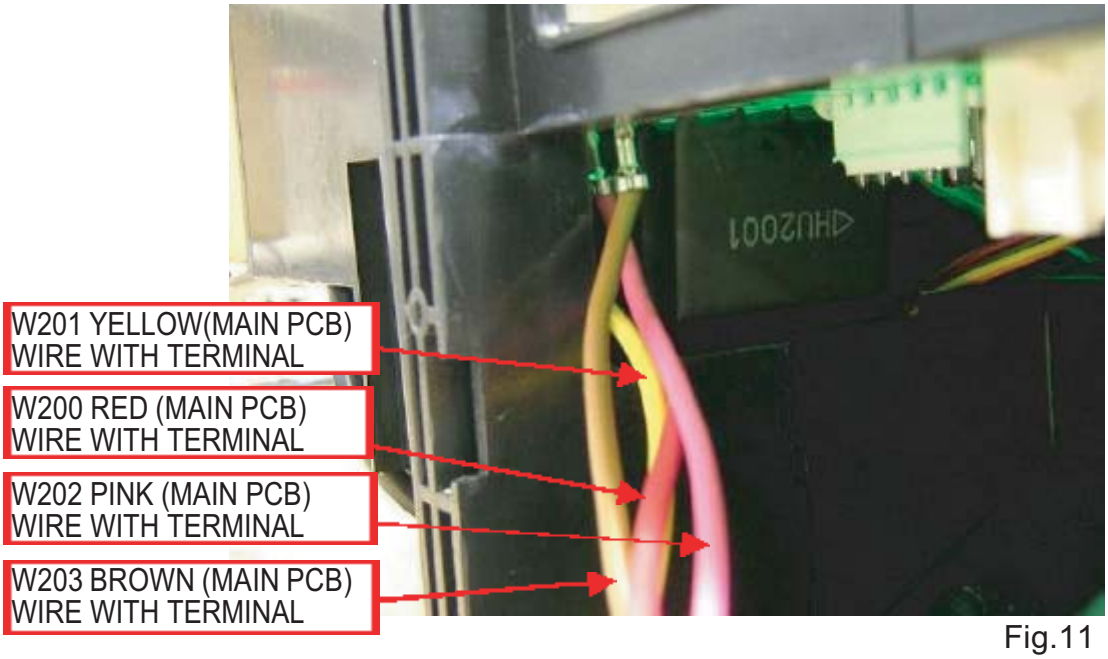

Fig.11

MODEL : AOU36RML

PROCESS Assemble WIRE WITH TERMINAL (ACTL, etc)

USED PARTS ①WIRE WITH TERMINAL

REGULATIONS

As shown in Fig.1 assemble WIRE WITH TERMINAL to INVERTER BOX A.

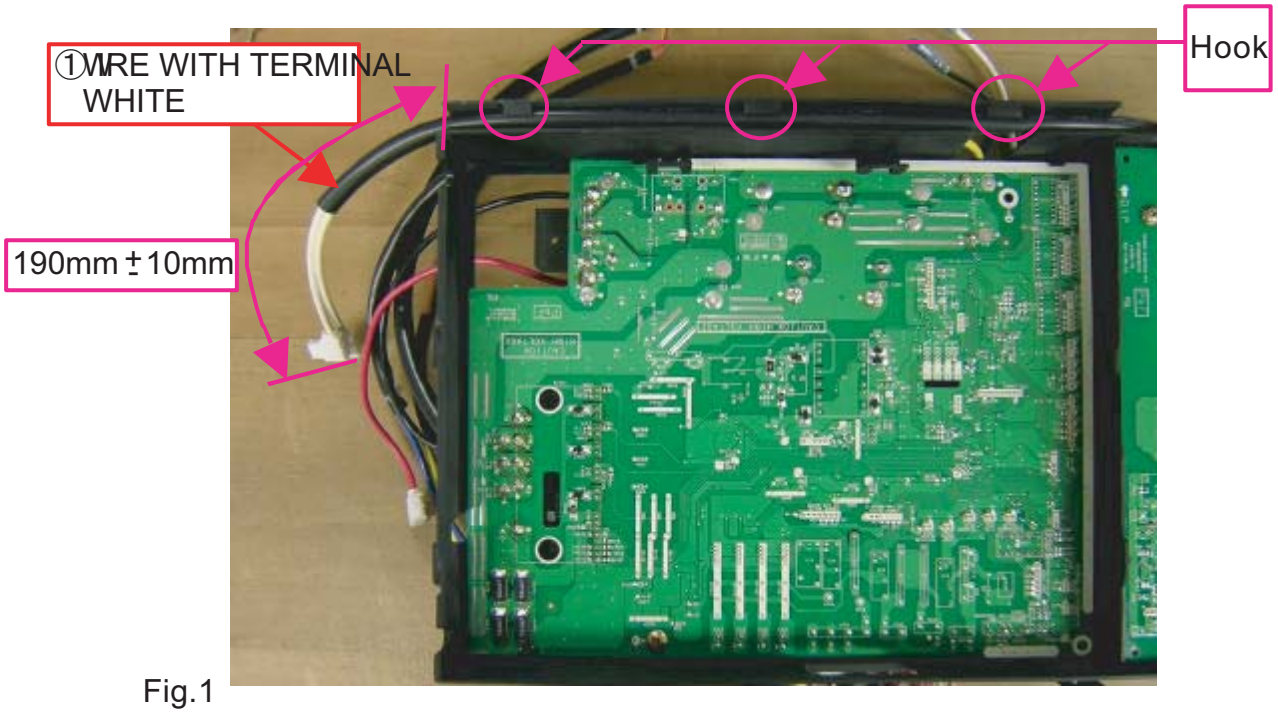

Fig.1

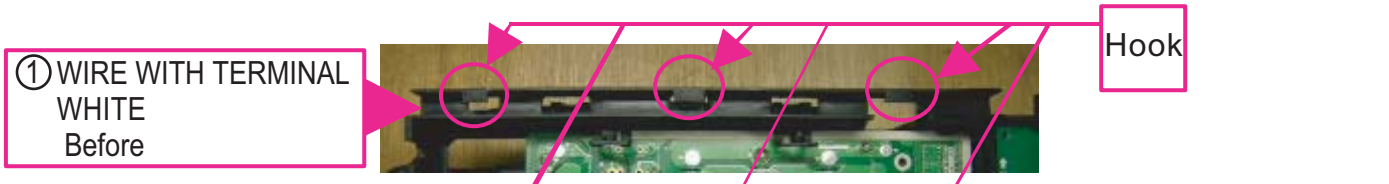

Fig.2

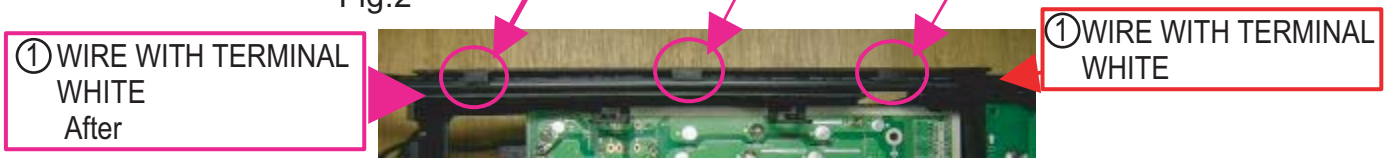

Fig.3

MODEL : AOU36RML

PROCESS Connect wires. (INVERTER BOX A)

USED PARTS ①EMI FILTER
②BINDER C

REGULATIONS

As shown in Fig1-2, assemble EMI FILTER. Turn of the wire is according as Fig.1.

As shown in Fig.2, certainly fix EMI FILTER to wires by BINDER.

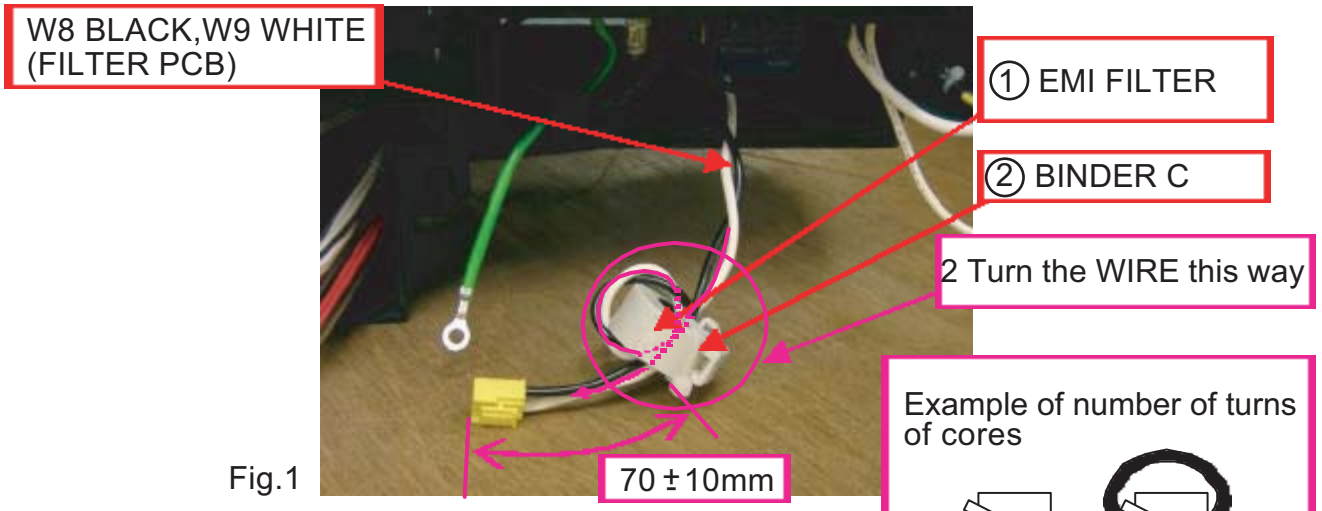

Fig.1

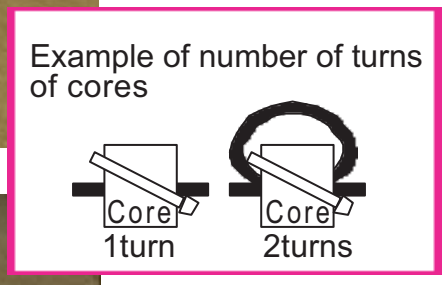

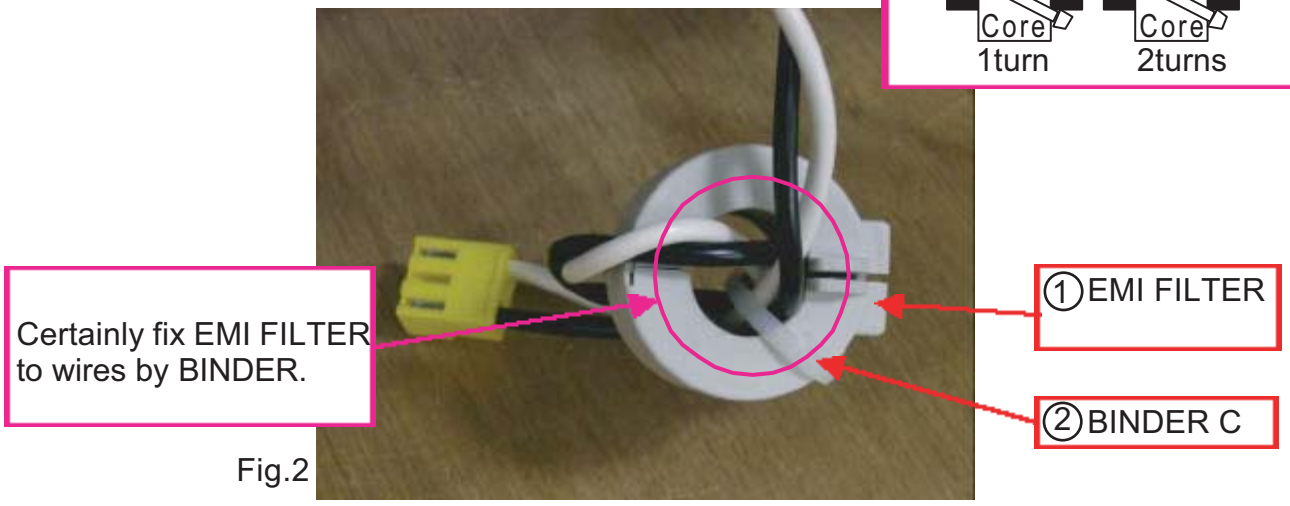

Fig.2

MODEL : AOU36RML
REGULATIONS
As shown in Fig.3, connect wires.

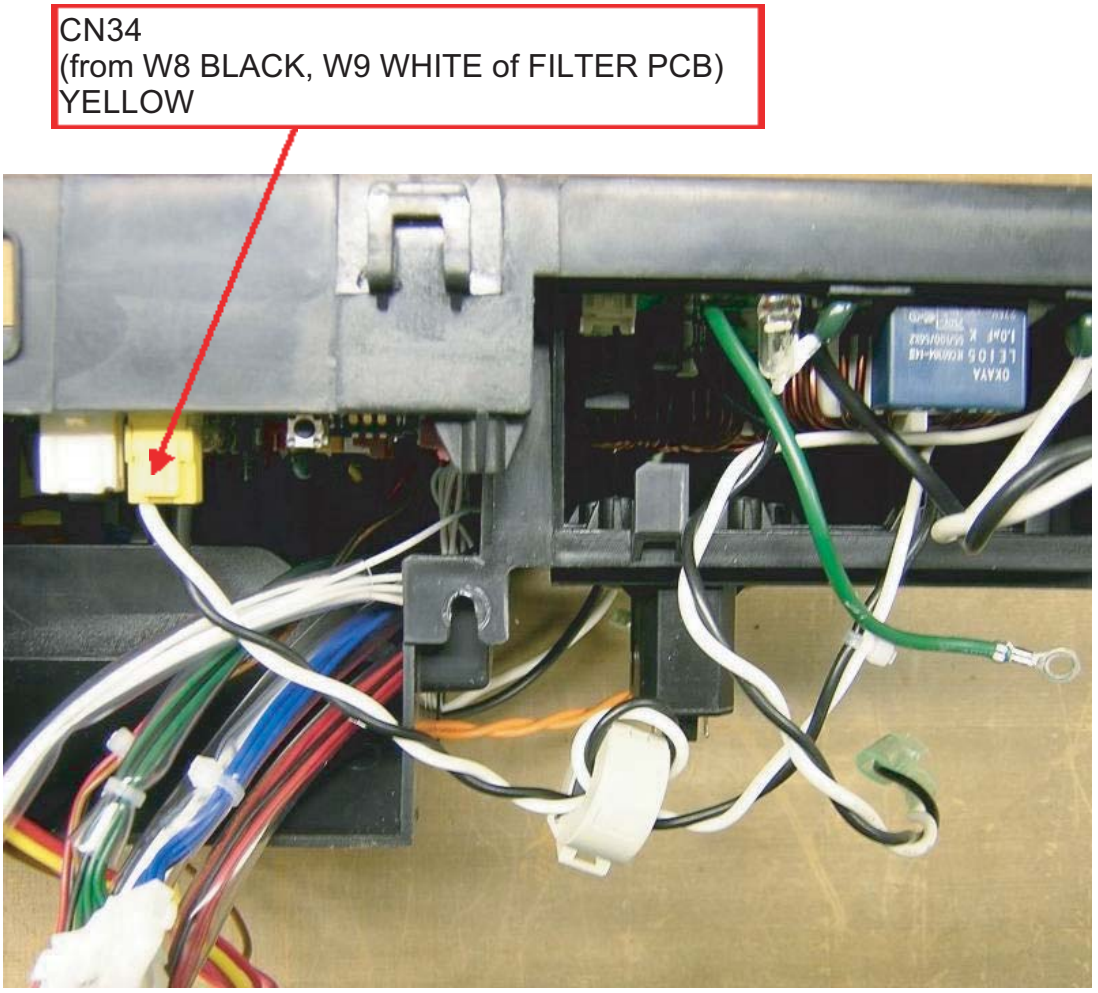

Fig.3

MODEL : AOU36RML
REGULATIONS
As shown in Fig.4-5, connect wires. PCB must not warp when you connect CN1.

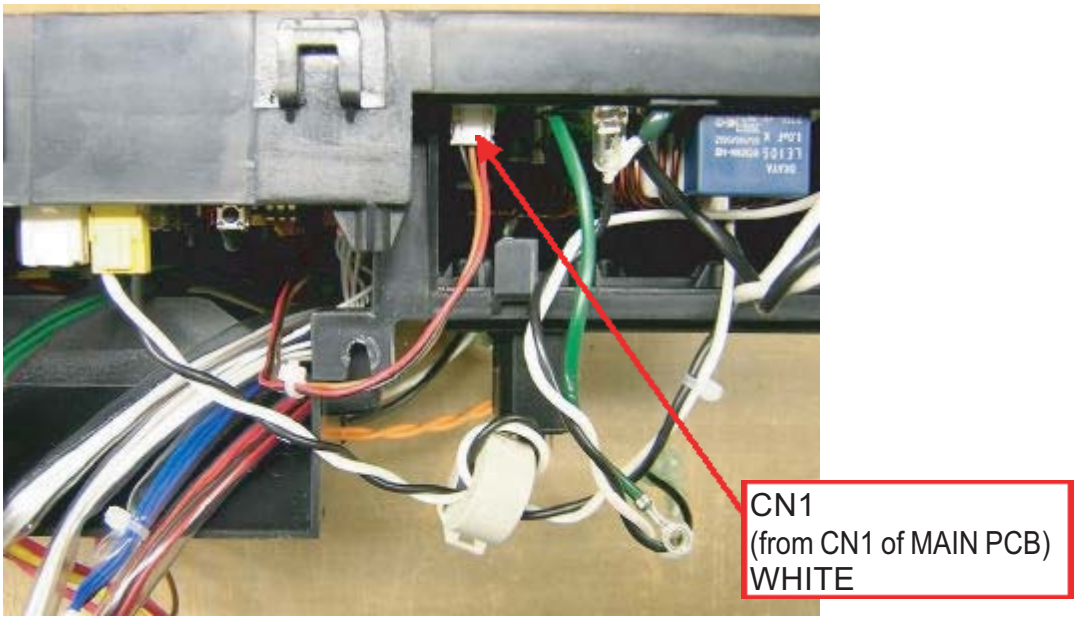

Fig.4

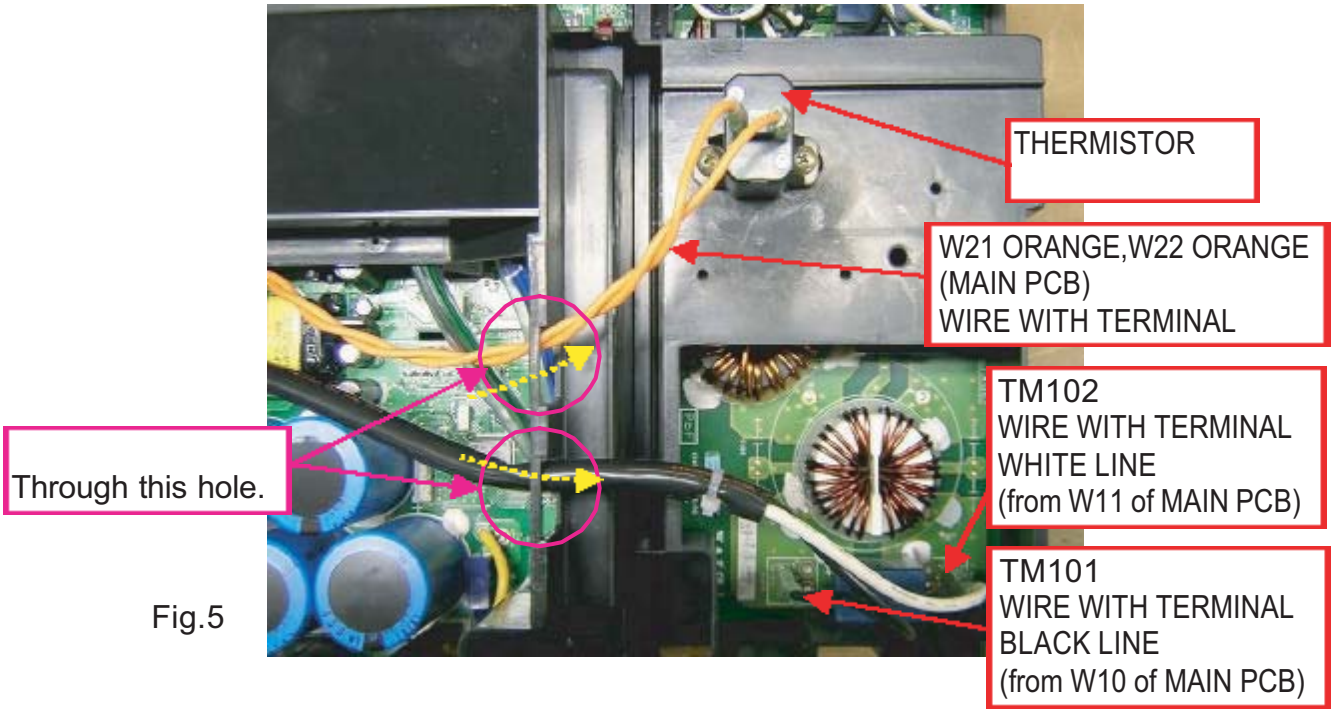

Fig.5

MODEL : AOU36RML
PROCESS Fix the wires to INVERTER BOX A
(HEATSINK THERMISTOR, etc)

REGULATIONS
As shown in Fig.1 fix the wires to INVERTER BOX A.

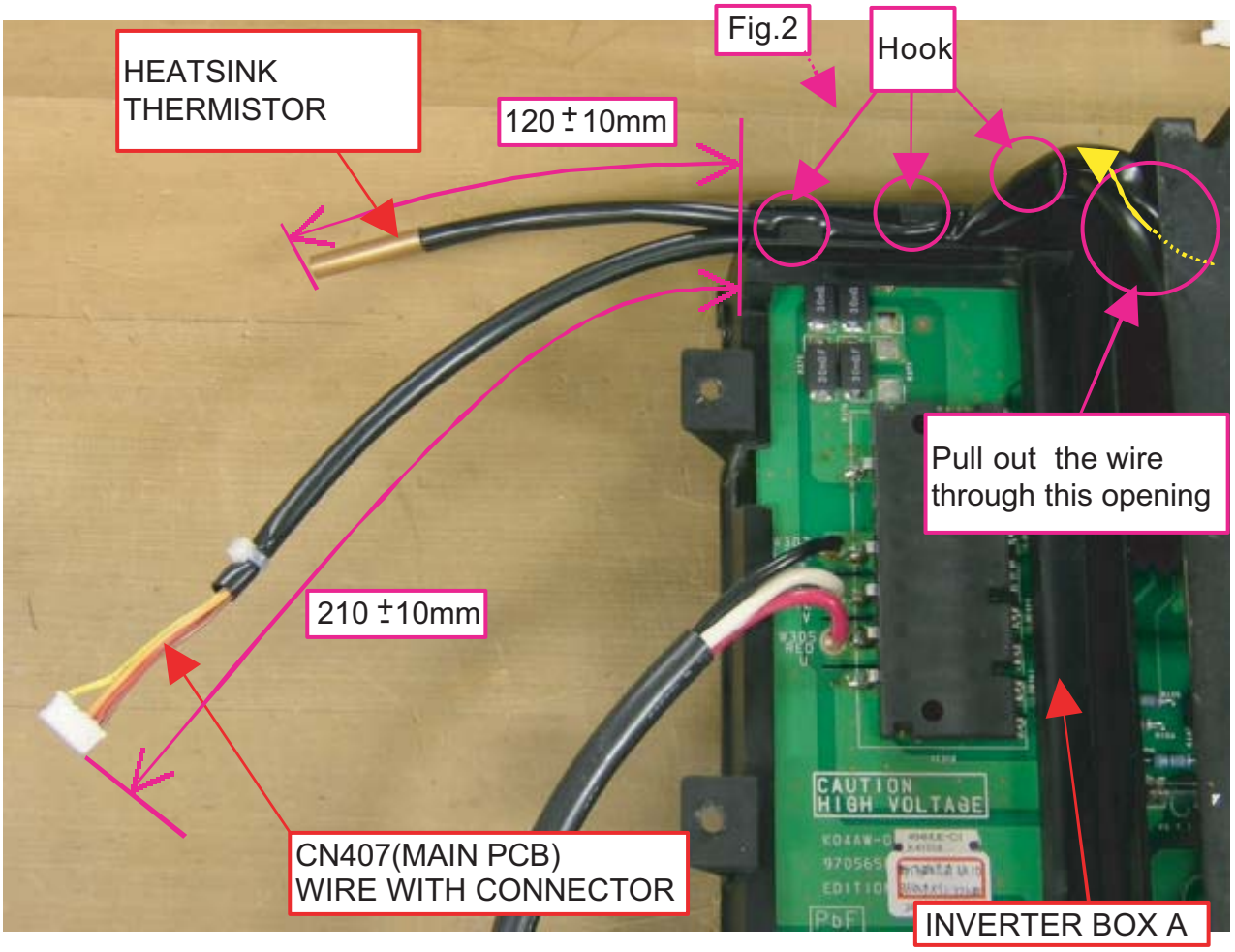

Fig.1

MODEL : AOU36RML
REGULATIONS
As shown in Fig.2, fix the wires to INVERTER BOX A.

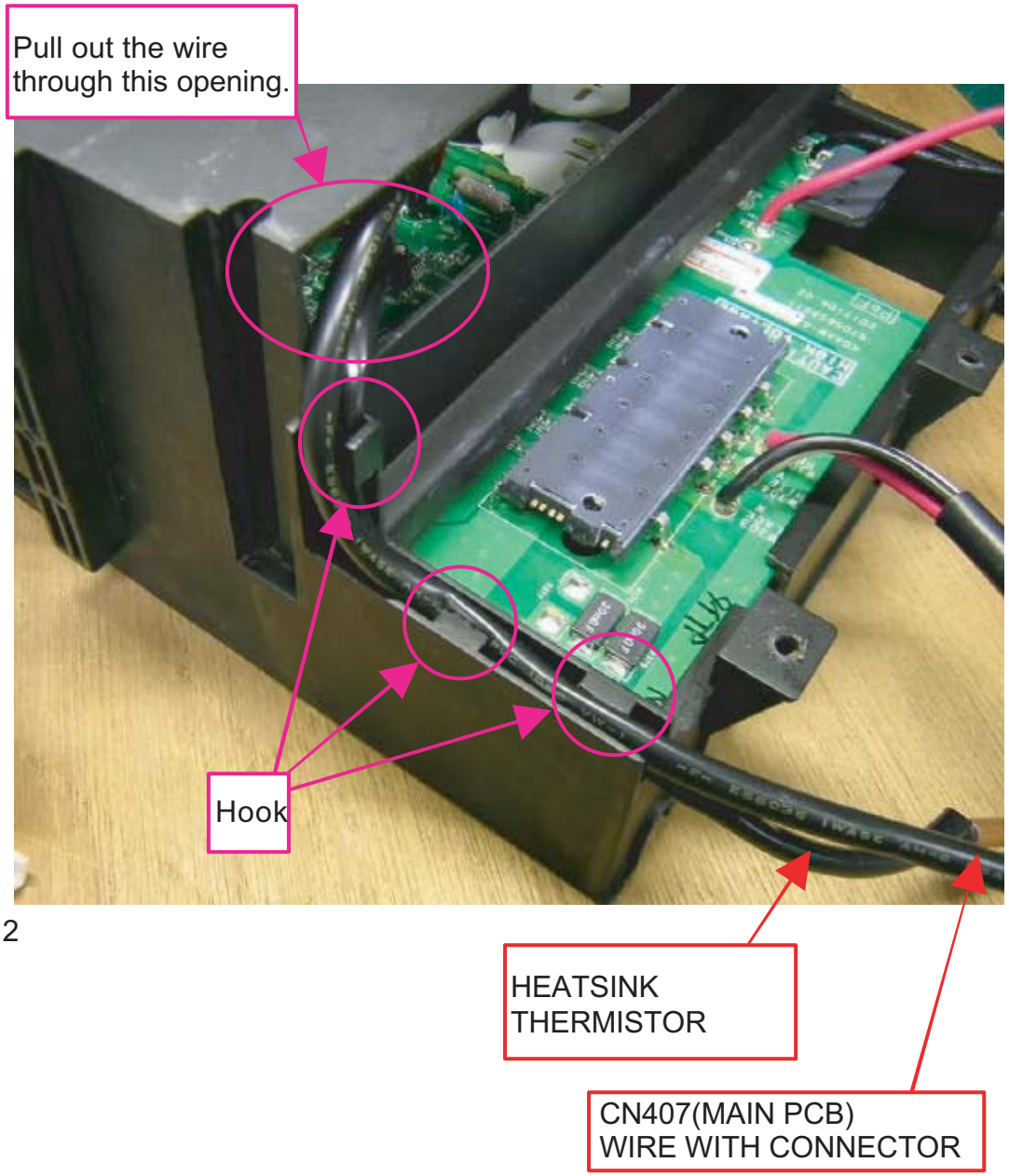

Fig.2

MODEL : AOU36RML

REGULATIONS

Tighten screw as shown in figure.

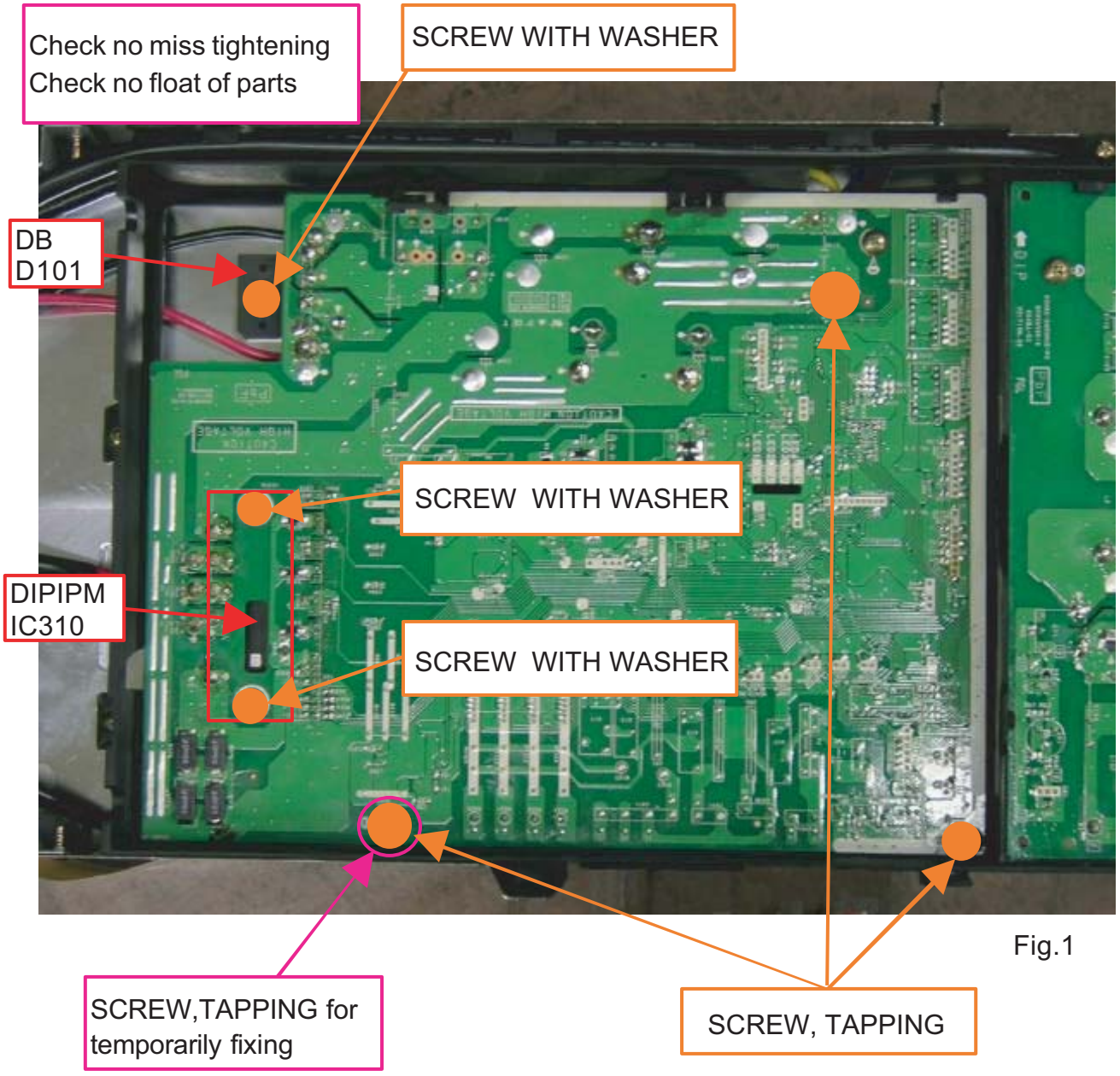

Fig.1

MODEL : AOU36RML

PROCESS Bind WIRE WITH CONNECTOR. (COMP WIRE)

USED PARTS ① BINDER C

REGULATIONS

As shown in the figures, set WIRE WITH CONNECTOR and bind it to INVERTER BOX A. The wire must not come in contact with the HOLDER(THERMO) SUS304 CSP-H T0.5

Fig.1

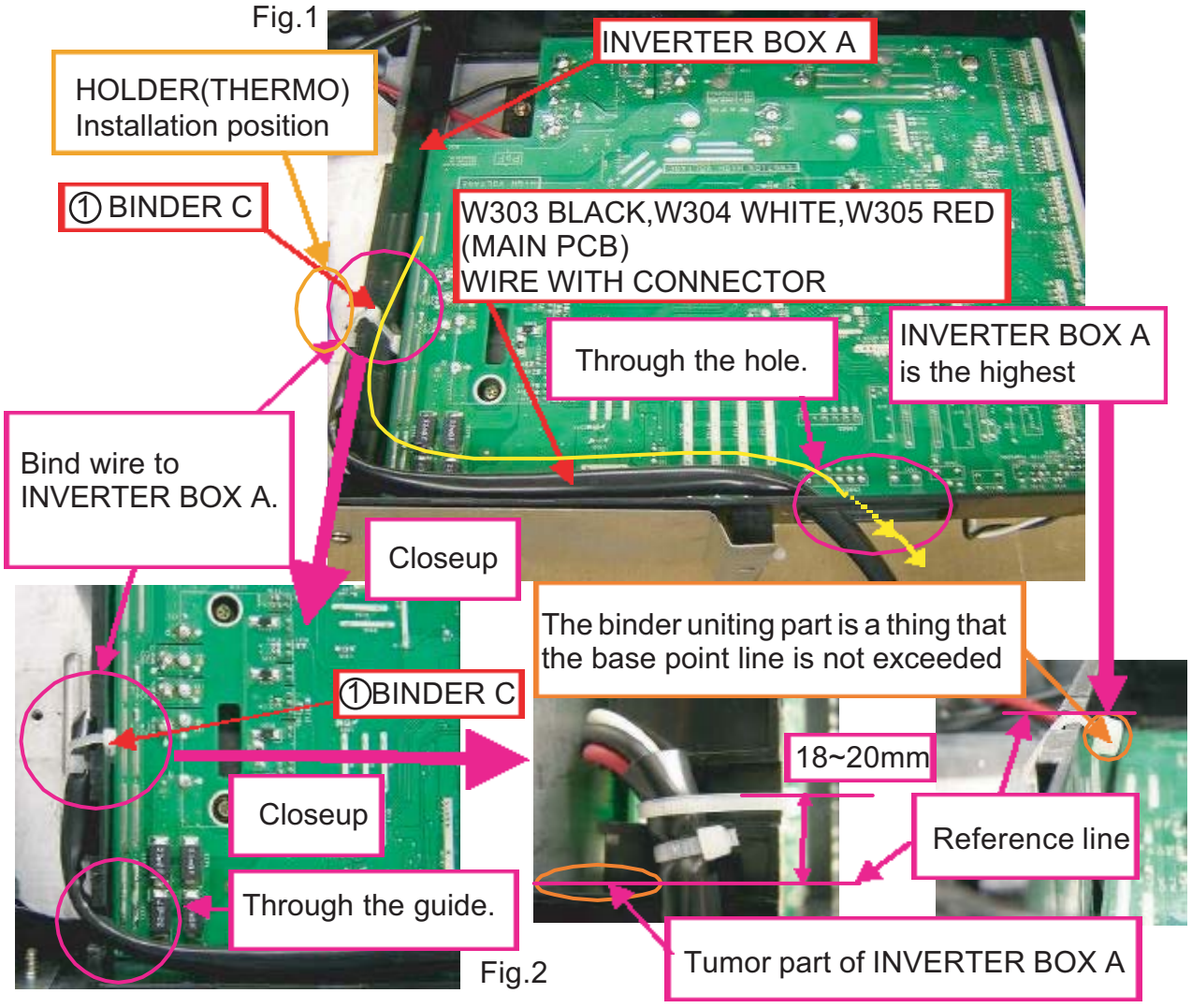

Fig.2

MODEL : AOU36RML

PROCESS Connect wires.
D,PWR(BRIDGE), ACTPM

USED PARTS ①EMI FILTER
②BINDER C

REGULATIONS

As shown in figures, assemble EMI FILTER. Turn of the wire is according as Fig.3.
As shown in Fig.2, certainly fix EMI FILTER to wires by BINDER.

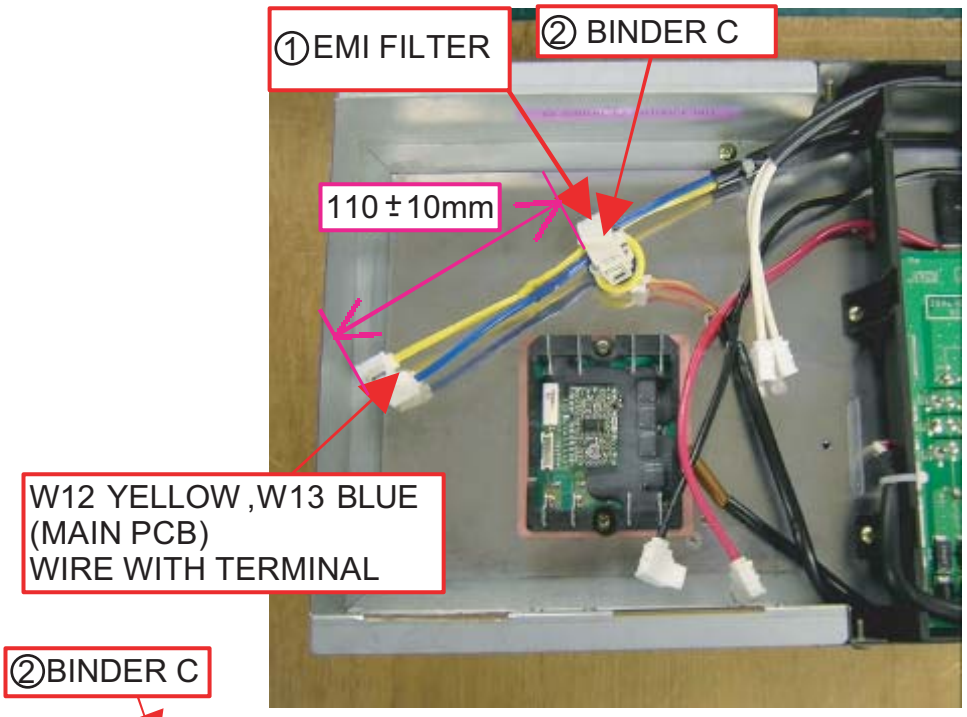

Fig.1

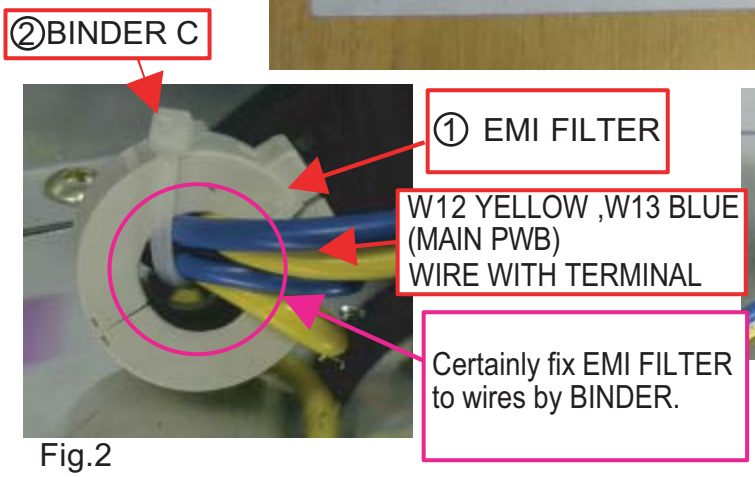

Fig.2

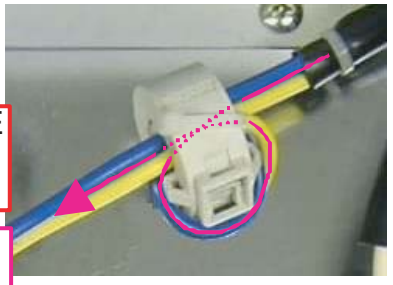

Fig.3

MODEL : AOU36RML
REGULATIONS
As shown in Fig.4, connect wires.

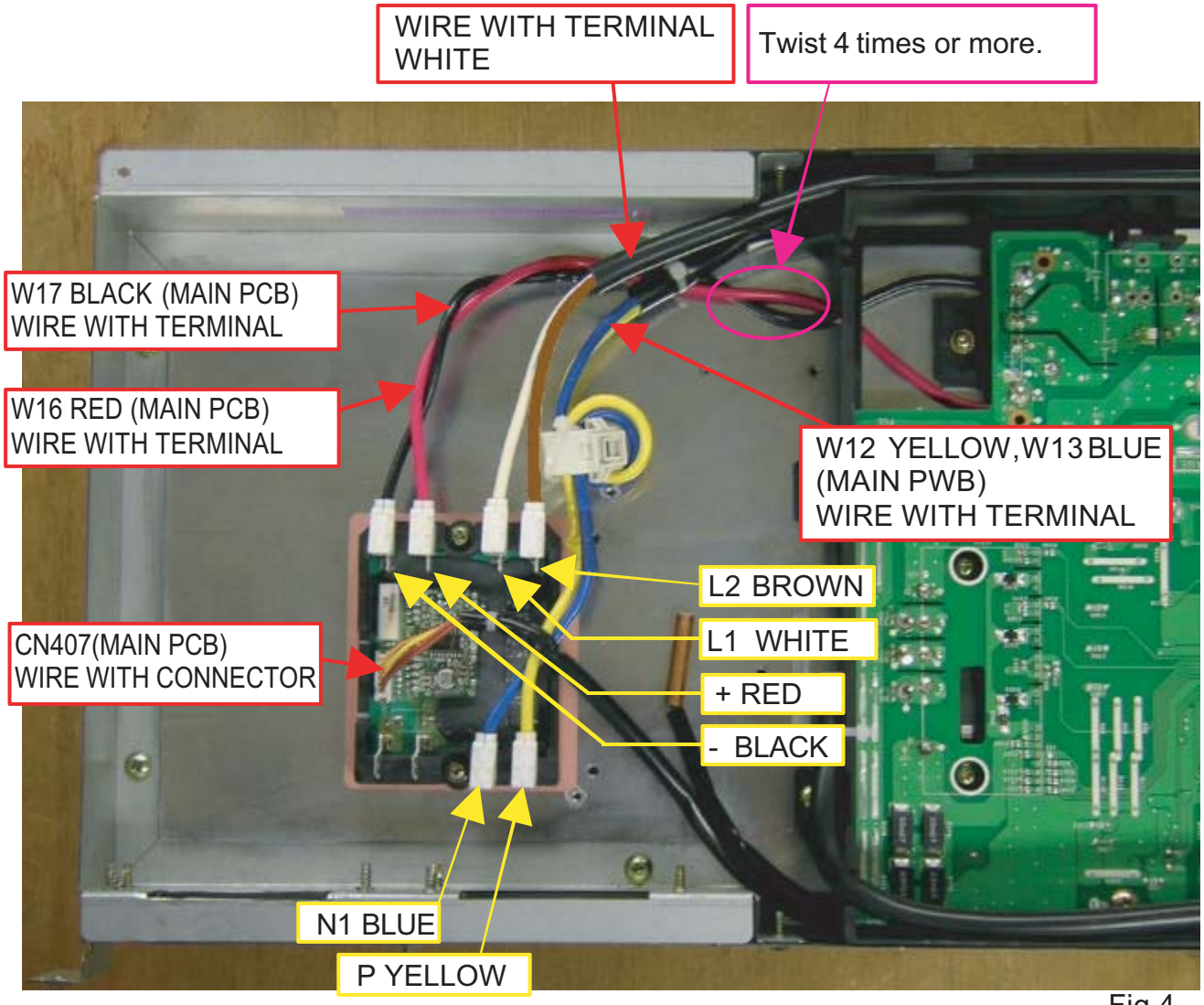

Fig.4

MODEL : AOU36RML
REGULATIONS
As shown in Fig.5 bind 3 types of wires

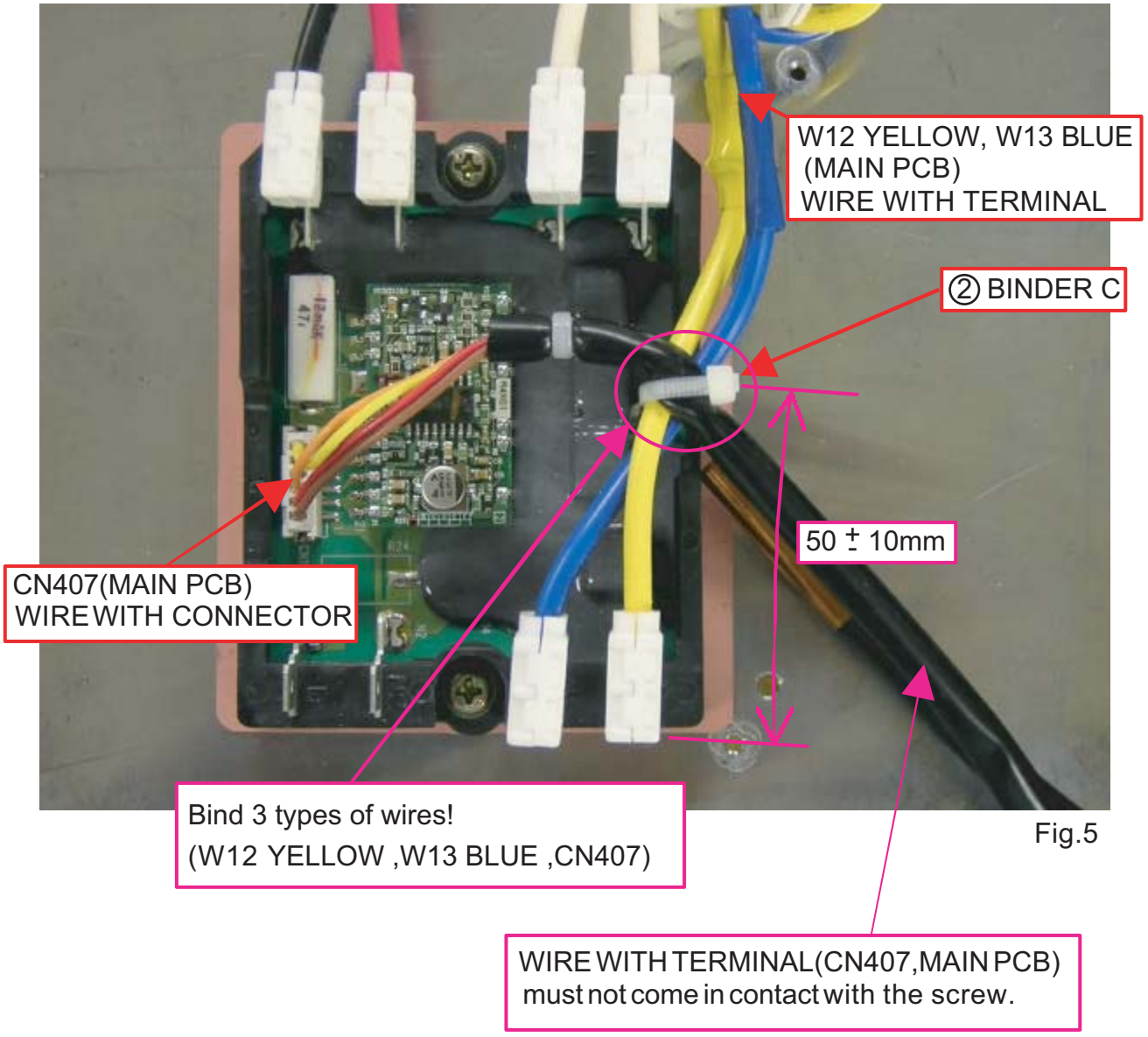

Fig.5

MODEL : AOU36RML

PROCESS Connect wires. (TERMINAL)

REGULATIONS

As shown in figures, connect wires.
A right picture shows the example of two times of the twist.

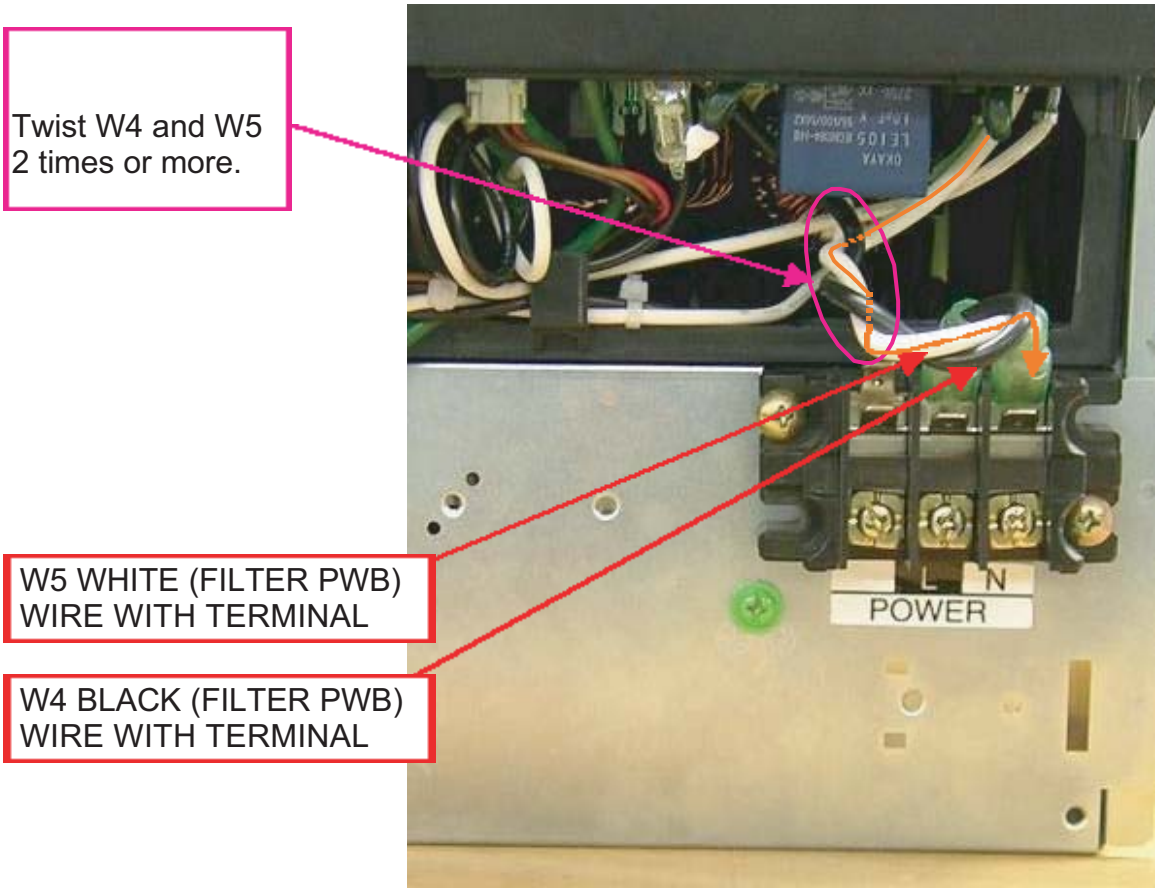

Fig.1

MODEL : AOU36RML

PROCESS

Connect wires.
(PWB ASSY(MAIN),INVERTER BOX D)

REGULATIONS

As shown in figures, connect wires.

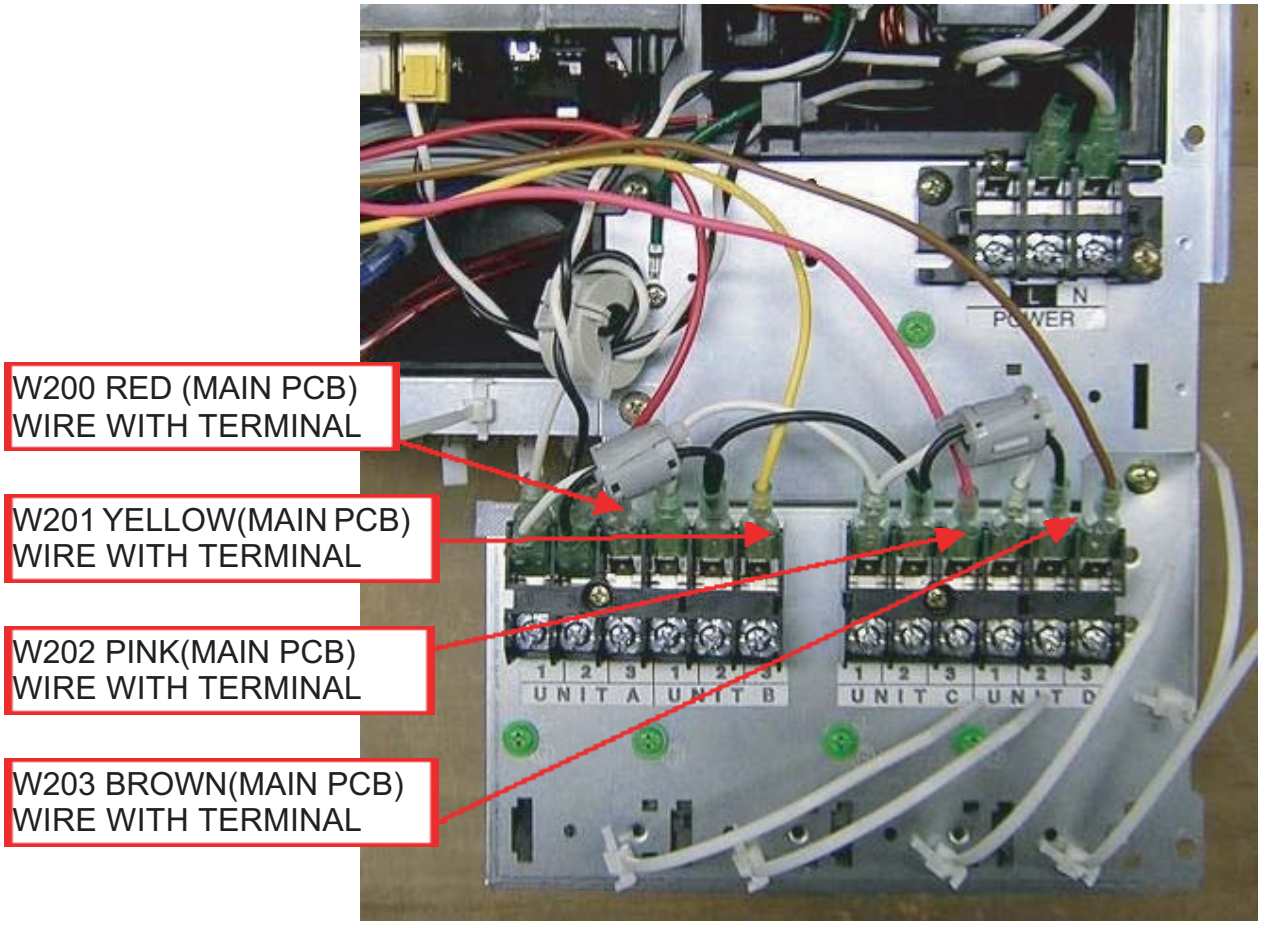

Fig.1

MODEL : AOU36RML

PROCESS Bind wires.

USED PARTS ① BINDER C

REGULATIONS

As shown in figures, bind 6 types of wires.

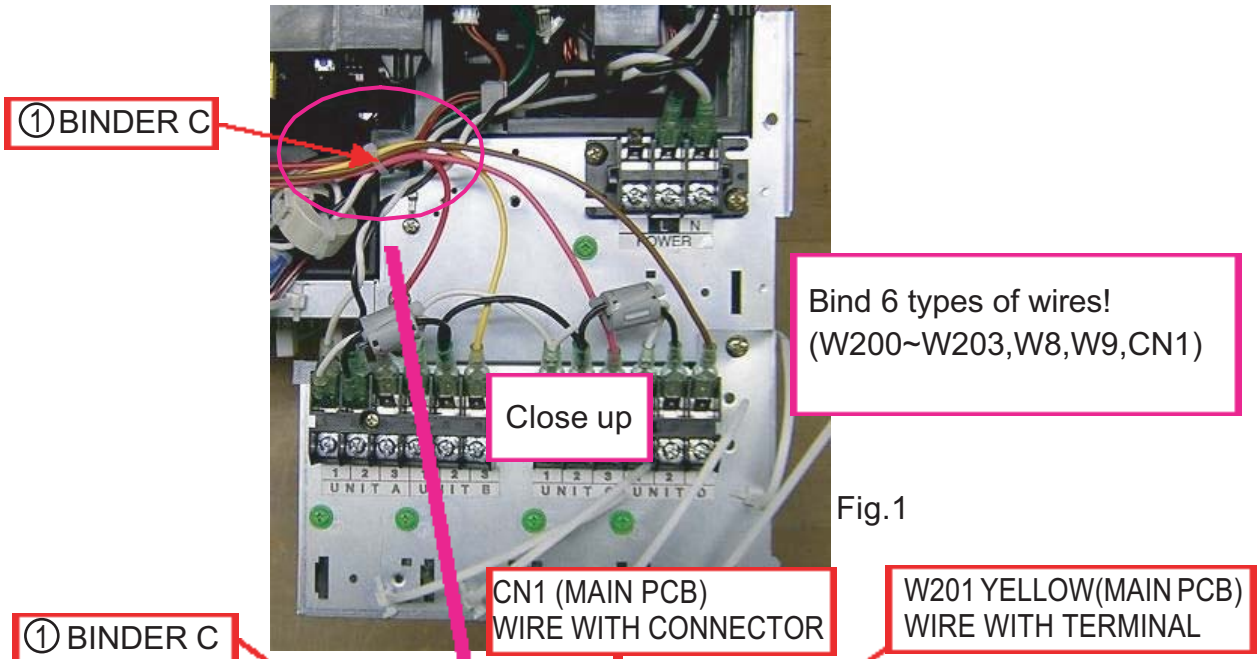

Fig.1

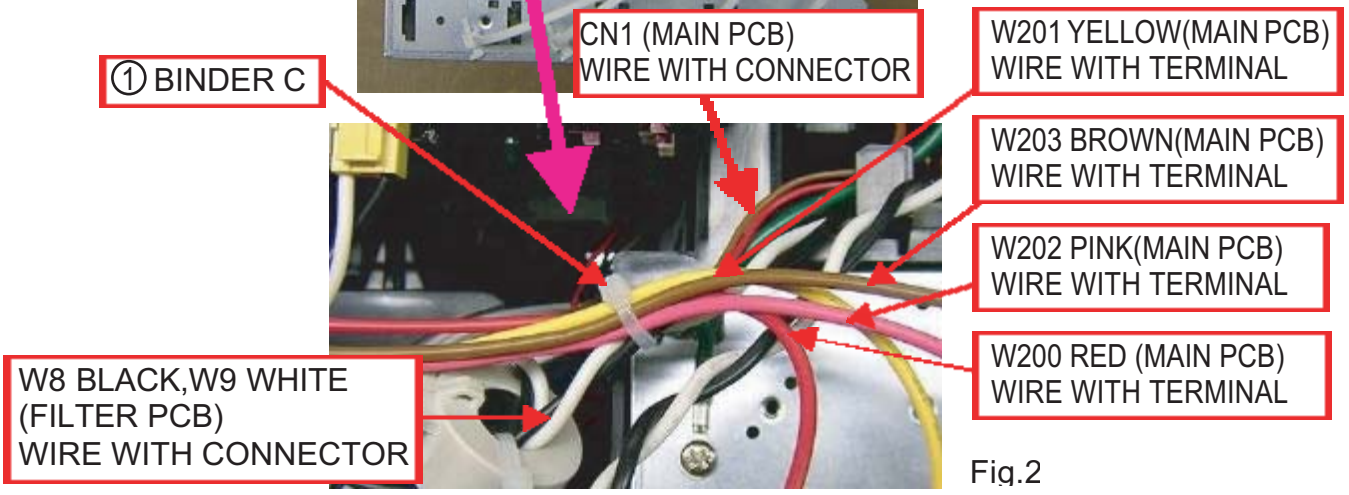

Fig.2

Refrigerant
R410A

WALL MOUNTED type
INVERTER (MULTI)

4 . APPENDING DATA

1. PT CHART

1. PT CHART

MODEL NAME : ASU12RMLQ+ASU12RMLQ+ASU12RMLQ / AOU36RML

COOLING			Outdoor Temperature Dry Bulb (°F)							
			70	82	95	110	115	120	125	130
Indoor Temperature Dry / Wet Bulb (°F)	70 / 60	CAPACITY (BTU)	32360	31970	31550	22290	16440	13630	12230	10820
		INPUT (W)	2350	2920	4020	3130	2260	2260	2280	2300
		AMPS (A)	10.3	12.8	17.7	13.7	9.9	9.9	10.0	10.1
		HI PR (PSI)	331	382	437	501	523	544	565	608
		LO PR (PSI)	106	113	121	129	132	135	137	140
	80/67	CAPACITY (BTU)	36620	36190	35700	25220	18610	15430	13840	12250
		INPUT (W)	2390	2970	4100	3190	2300	2300	2320	2350
		AMPS (A)	10.5	13.0	18.0	14.0	10.1	10.1	10.2	10.3
		HI PR (PSI)	341	391	446	509	530	551	572	609
		LO PR (PSI)	119	126	133	142	145	148	151	154
	90/73	CAPACITY (BTU)	40290	39810	39280	27750	20480	16980	15230	13480
		INPUT (W)	2430	3020	4170	3250	2340	2340	2360	2390
		AMPS (A)	10.7	13.3	18.3	14.3	10.3	10.3	10.4	10.5
		HI PR (PSI)	350	399	452	514	534	554	575	609
		LO PR (PSI)	131	139	147	156	159	162	165	169

*120~130F : Out of operation range. No warranty

HEATING			Outdoor Temperature Dry Bulb (°F)			
			17	35	47	75
Indoor Temp. Dry / Wet Bulb (°F)	70 / 60	CAPACITY (BTU)			42600	
		INPUT (W)			3800	
		AMPS (A)			16.7	
		HI PR (PSI)			392	
		LO PR (PSI)			87	
	80/67	CAPACITY (BTU)				
		INPUT (W)				
		AMPS (A)				
		HI PR (PSI)				
		LO PR (PSI)				

*Blank : Because operation is not same, data are omitted by defrost operation and heating overload protection

MODEL NAME : ASU9RMLQ+ASU9RMLQ+ASU9RMLQ / AOU36RML

COOLING			Outdoor Temperature Dry Bulb (°F)							
			70	82	95	110	115	120	125	130
Indoor Temperature Dry / Wet Bulb (°F)	70 / 60	CAPACITY (BTU)	28590	27990	29160	20410	16070	13140	11670	10210
		INPUT (W)	1960	2470	3670	3230	2310	2310	2340	2360
		AMPS (A)	8.6	10.8	16.1	14.2	10.1	10.1	10.3	10.4
		HI PR (PSI)	324	374	428	491	513	533	554	596
		LO PR (PSI)	104	111	119	126	129	132	134	137
	80/67	CAPACITY (BTU)	32360	31680	33000	23100	18190	14870	13210	11550
		INPUT (W)	2000	2520	3740	3290	2360	2360	2380	2410
		AMPS (A)	8.8	11.1	16.4	14.4	10.4	10.4	10.5	10.6
		HI PR (PSI)	334	383	437	499	519	540	561	597
		LO PR (PSI)	117	123	130	139	142	145	148	151
	90/73	CAPACITY (BTU)	35600	34850	36310	25420	20010	16360	14530	12710
		INPUT (W)	2030	2560	3810	3340	2400	2400	2420	2450
		AMPS (A)	8.9	11.2	16.7	14.7	10.5	10.5	10.6	10.8
		HI PR (PSI)	343	391	443	504	523	543	564	597
		LO PR (PSI)	128	136	144	153	156	159	162	166

*120~130F : Out of operation range. No warranty

HEATING			Outdoor Temperature Dry Bulb (°F)			
			17	35	47	75
Indoor Temp. Dry / Wet Bulb (°F)	70 / 60	CAPACITY (BTU)			40200	
		INPUT (W)			3800	
		AMPS (A)			16.7	
		HI PR (PSI)			419	
		LO PR (PSI)			97	
	80/67	CAPACITY (BTU)				
		INPUT (W)				
		AMPS (A)				
		HI PR (PSI)				
		LO PR (PSI)				

*Blank : Because operation is not same, data are omitted by defrost operation and heating overload protection

MODEL NAME : ASU12RMLQ+ASU12RMLQ+ASU9RMLQ / AOU36RML

COOLING			Outdoor Temperature Dry Bulb (°F)							
			70	82	95	110	115	120	125	130
Indoor Temperature Dry / Wet Bulb (°F)	70 / 60	CAPACITY (BTU)	31430	31040	30570	21400	16030	13360	12030	10700
		INPUT (W)	2350	2910	4020	3150	2260	2260	2280	2300
		AMPS (A)	10.3	12.8	17.7	13.8	9.9	9.9	10.0	10.1
		HI PR (PSI)	331	382	437	501	523	544	565	608
		LO PR (PSI)	106	113	121	129	132	135	137	140
	80/67	CAPACITY (BTU)	35570	35130	34600	24220	18140	15120	13620	12110
		INPUT (W)	2390	2970	4100	3210	2300	2300	2320	2350
		AMPS (A)	10.5	13.0	18.0	14.1	10.1	10.1	10.2	10.3
		HI PR (PSI)	341	391	446	509	530	551	572	609
		LO PR (PSI)	119	126	133	142	145	148	151	154
	90/73	CAPACITY (BTU)	39130	38650	38070	26650	19960	16640	14980	13320
		INPUT (W)	2430	3020	4170	3270	2340	2340	2360	2390
		AMPS (A)	10.7	13.3	18.3	14.4	10.3	10.3	10.4	10.5
		HI PR (PSI)	350	399	452	514	534	554	575	609
		LO PR (PSI)	131	139	147	156	159	162	165	169

*120~130F : Out of operation range. No warranty

HEATING			Outdoor Temperature Dry Bulb (°F)			
			17	35	47	75
Indoor Temp. Dry / Wet Bulb (°F)	70 / 60	CAPACITY (BTU)			41000	
		INPUT (W)			4100	
		AMPS (A)			18.0	
		HI PR (PSI)			406	
		LO PR (PSI)			94	
	80/67	CAPACITY (BTU)				
		INPUT (W)				
		AMPS (A)				
		HI PR (PSI)				
		LO PR (PSI)				

*Blank : Because operation is not same, data are omitted by defrost operation and heating overload protection

MODEL NAME : ASU12RMLQ+ASU9RMLQ+ASU9RMLQ / AOU36RML

COOLING			Outdoor Temperature Dry Bulb (°F)							
			70	82	95	110	115	120	125	130
Indoor Temperature Dry / Wet Bulb (°F)	70 / 60	CAPACITY (BTU)	29960	28590	29960	20970	15780	13130	11810	10490
		INPUT (W)	2190	2760	4020	3150	2260	2260	2280	2300
		AMPS (A)	9.6	12.1	17.7	13.8	9.9	9.9	10.0	10.1
		HI PR (PSI)	328	378	433	496	518	539	559	602
		LO PR (PSI)	105	112	120	128	131	134	136	139
	80/67	CAPACITY (BTU)	33900	32350	33900	23730	17860	14860	13360	11870
		INPUT (W)	2240	2820	4100	3220	2300	2300	2320	2350
		AMPS (A)	9.8	12.4	18.0	14.1	10.1	10.1	10.2	10.3
		HI PR (PSI)	338	387	442	504	525	545	566	603
		LO PR (PSI)	118	125	132	141	144	147	149	152
	90/73	CAPACITY (BTU)	37300	35590	37300	26110	19650	16350	14700	13060
		INPUT (W)	2270	2860	4170	3270	2340	2340	2360	2390
		AMPS (A)	10.0	12.6	18.3	14.4	10.3	10.3	10.4	10.5
		HI PR (PSI)	347	395	447	509	529	548	569	603
		LO PR (PSI)	130	138	146	154	157	160	163	167

*120~130F : Out of operation range. No warranty

HEATING			Outdoor Temperature Dry Bulb (°F)			
			17	35	47	75
Indoor Temp. Dry / Wet Bulb (°F)	70 / 60	CAPACITY (BTU)			40000	
		INPUT (W)			4100	
		AMPS (A)			18.0	
		HI PR (PSI)			413	
		LO PR (PSI)			94	
	80/67	CAPACITY (BTU)				
		INPUT (W)				
		AMPS (A)				
		HI PR (PSI)				
		LO PR (PSI)				

*Blank : Because operation is not same, data are omitted by defrost operation and heating overload protection

MODEL NAME : ASU18RMLQ+ASU9RMLQ+ASU9RMLQ / AOU36RML

COOLING			Outdoor Temperature Dry Bulb (°F)							
			70	82	95	110	115	120	125	130
Indoor Temperature Dry / Wet Bulb (°F)	70 / 60	CAPACITY (BTU)	32630	32240	31810	22260	16580	13860	12490	11130
		INPUT (W)	2350	2920	4020	3140	2260	2260	2280	2300
		AMPS (A)	10.3	12.8	17.7	13.8	9.9	9.9	10.0	10.1
		HI PR (PSI)	331	382	437	501	523	544	565	608
		LO PR (PSI)	106	113	121	129	132	135	137	140
	80/67	CAPACITY (BTU)	36920	36480	36000	25200	18760	15680	14140	12600
		INPUT (W)	2390	2970	4100	3210	2300	2300	2320	2350
		AMPS (A)	10.5	13.0	18.0	14.1	10.1	10.1	10.2	10.3
		HI PR (PSI)	341	391	446	509	530	551	572	609
		LO PR (PSI)	119	126	133	142	145	148	151	154
	90/73	CAPACITY (BTU)	40620	40140	39600	27720	20640	17250	15560	13860
		INPUT (W)	2430	3020	4170	3260	2340	2340	2360	2390
		AMPS (A)	10.7	13.3	18.3	14.3	10.3	10.3	10.4	10.5
		HI PR (PSI)	350	399	452	514	534	554	575	609
		LO PR (PSI)	131	139	147	156	159	162	165	169

*120~130F : Out of operation range. No warranty

HEATING			Outdoor Temperature Dry Bulb (°F)			
			17	35	47	75
Indoor Temp. Dry / Wet Bulb (°F)	70 / 60	CAPACITY (BTU)			42000	
		INPUT (W)			3800	
		AMPS (A)			16.7	
		HI PR (PSI)			389	
		LO PR (PSI)			87	
	80/67	CAPACITY (BTU)				
		INPUT (W)				
		AMPS (A)				
		HI PR (PSI)				
		LO PR (PSI)				

*Blank : Because operation is not same, data are omitted by defrost operation and heating overload protection

MODEL NAME : ASU9RMLQ×4 / AOU36RML

COOLING			Outdoor Temperature Dry Bulb (°F)							
			70	82	95	110	115	120	125	130
Indoor Temperature Dry / Wet Bulb (°F)	70 / 60	CAPACITY (BTU)	32630	32240	31810	22260	16580	13860	12490	11130
		INPUT (W)	2350	2920	4020	3140	2260	2260	2280	2300
		AMPS (A)	10.3	12.8	17.7	13.8	9.9	9.9	10.0	10.1
		HI PR (PSI)	331	382	437	501	523	544	565	608
		LO PR (PSI)	111	119	127	135	139	142	144	147
	80/67	CAPACITY (BTU)	36920	36480	36000	25200	18760	15680	14140	12600
		INPUT (W)	2390	2970	4100	3210	2300	2300	2320	2350
		AMPS (A)	10.5	13.0	18.0	14.1	10.1	10.1	10.2	10.3
		HI PR (PSI)	341	391	446	509	530	551	572	609
		LO PR (PSI)	125	132	140	149	152	155	159	162
	90/73	CAPACITY (BTU)	40620	40140	39600	27720	20640	17250	15560	13860
		INPUT (W)	2430	3020	4170	3260	2340	2340	2360	2390
		AMPS (A)	10.7	13.3	18.3	14.3	10.3	10.3	10.4	10.5
		HI PR (PSI)	350	399	452	514	534	554	575	609
		LO PR (PSI)	138	146	154	164	167	170	173	177

*120~130F : Out of operation range. No warranty

HEATING			Outdoor Temperature Dry Bulb (°F)			
			17	35	47	75
Indoor Temp. Dry / Wet Bulb (°F)	70 / 60	CAPACITY (BTU)			42000	
		INPUT (W)			3800	
		AMPS (A)			16.7	
		HI PR (PSI)			367	
		LO PR (PSI)			93	
	80/67	CAPACITY (BTU)				
		INPUT (W)				
		AMPS (A)				
		HI PR (PSI)				
		LO PR (PSI)				

*Blank : Because operation is not same, data are omitted by defrost operation and heating overload protection

FUJITSU

FUJITSU GENERAL LIMITED

1116, Suenaga, Takatsu-ku, Kawasaki 213-8502, Japan

GS06082006

JUN 2006 Printed in Japan