System Air Conditioner

SAMSUNG

CAC

Technical Data Book

HSP Duct for Australia

Contents

I. Model Identification

1. Nomenclature 3
2. Line-up 5
3. Accessories 6

II. Specification 7

III. Dimensional Drawing

1. Indoor unit 8
2. Outdoor unit 9

IV. Performance Data

1. Capacity Table 10
2. Capacity Correction 12
3. P-Q Curve 13
4. Sound Pessure Level 14

V. Cycle & Wiring Diagram

1. Cycle Diagram 15
2. Wiring Diagram 16

VI. Installation

1. Space Requirement 18
2. Error Code 19

1. Nomenclature

1-1. Indoor Unit

Model Name

NS	105	H	H	X	E	A	/	XSA
(1)	(2)	(3)	(4)	(5)	(6)	(7)		(Buyer)

(1) Classification	
NS	Single

(2) Capacity
x 1/10 kW (3 digits)

(3) Product Notation		
H	HSP	Duct
S	MSP	
L	LSP(SLIM)	

(4) Mode	
C	Cooling Only
H	Heat Pump

(5) Refrigerant	
R	R22
X	R410A

(6) Rating Voltage	
E	1Φ, 220~240V, 50Hz
G	3Φ, 380~415V, 50Hz

(7) Version	
1~9	Domestic (KOREA)
A~Z	Export

1. Nomenclature

1-2. Outdoor Unit

Model Name

RC	105	D	H	X	E	A	/	XSA
(1)	(2)	(3)	(4)	(5)	(6)	(7)		(Buyer)

(1) Classification	
RC	Single

(2) Capacity
x 1/10 Kw (3 digits)

(3) Product Notation	
P	Inverter PRM
D	Inverter DLX
S	Inverter STD
Z	Flagship

(4) Mode	
C	Cooling Only
H	Heat Pump

(5) Refrigerant	
R	R22
X	R410A

(6) Rating Voltage	
E	1Φ, 220~240V, 50Hz
G	3Φ, 380~415V, 50Hz

(7) Version	
1~9	Domestic (KOREA)
A~Z	Export

2. Line-up

2-1. Indoor Unit

	Capacity (kW)		
	10.5	12.5	14.0
HSP Duct	●	●	●

2-2. Outdoor Unit

	Capacity (kW)		
	10.5	12.5	14.0
Inverter (1Φ)	●	●	●

3. Accessories

Classification		Product		Model	Image
Integrated Management System	Controller	DMS 2.0		MIM-D00A	
		S-NET 3		MST-P3P	
		S-NET mini		MST-S3W	
Centralized Control System	Controller	Centralized Controller		MCM-A202B	
	Interface Module	Centralized Controller Interface Module		MIM-B13B	
Individual Control System	Controller	Wireless Remote Controller		MR-AH01	
		Wired Remote Controller (Standard)		MWR-WH01	
		Wireless Signal Receiver Kit	Wireless Signal Receiver	MRK-A00	
			Receiver Wire	MRW-10A	
Guest Room Management System		External Contact Interface Module		MIM-B14	
Drain Pump		-		MDP-M075SGU2	

1. Specification

Model		Indoor Unit			NS105HHXEA/XSA	NS125HHXEA/XSA	NS140HHXEA/XSA
		Outdoor Unit			RC105DHXEA/XSA	RC125DHXEA/XSA	RC140DHXEA/XSA
Basic Performance	Power Supply			Ø/V/Hz	1/220-240/50	1/220-240/50	1/220-240/50
	Mode			-	HP (Heat Pump)	HP (Heat Pump)	HP (Heat Pump)
	Nominal Capacity	Cooling (Max/Std/Min)		kW	13.0 / 10.5 / 3.45	14.0 / 12.5 / 3.45	16.0 / 14.0 / 3.45
		Heating (Max/Std/Min)		kW	15.0 / 11.2 / 3.75	16.0 / 14.0 / 3.75	19.0 / 16.0 / 3.75
	Power Input	Cooling (Max/Std/Min)		kW	5.00 / 3.44 / 1.11	5.20 / 4.10 / 1.11	5.40 / 4.59 / 1.11
		Heating (Max/Std/Min)		kW	5.50 / 3.03 / 1.02	5.70 / 4.24 / 1.02	5.80 / 4.92 / 1.02
	Running Current	Cooling (Max/Std/Min)		A	20.5 / 15.5 / 5.0	22.0 / 20.5 / 5.0	23.5 / 20.5 / 5.0
		Heating (Max/Std/Min)		A	23.5 / 16.0 / 4.5	25.0 / 23.0 / 4.5	26.5 / 23.0 / 4.5
	COP	Cooling (Standard)		W/W	3.05	3.05	3.05
		Heating (Standard)		W/W	3.70	3.30	3.25
	Circuit Breaker	MCCB+ELB / ELCB		A	40	40	40
	Option Code	Standard			015773-11C337	015774-12C2F2	015774-13C2F2
	Refrigerant	Type		-	R410A	R410A	R410A
	Refrigerant Charge	Factory Charging		g	3,200	3,200	4,000
		Additional		g/m	40	40	40
	Refrigerant Control				EEV	EEV	EEV
	Operating Temp. Range	Cooling		℃	-15~50	-15~50	-15~50
		Heating		℃	-20~24	-20~24	-20~24
Indoor Unit	Indoor Fan	Type			Sirocco	Sirocco	Sirocco
		Motor	Output	W	450 x 2	450 x 2	450 x 2
	External Static Pressure	Max / Std / Min		mmAq	20 / 10 / 5	20 / 10 / 5	20 / 10 / 5
	Air Flow Rate	High (@ 10mmAq)		CMM	47	54	54
				L/S	780	900	900
	Temperature Controller				Thermistor	Thermistor	Thermistor
	Dimensions	Net	WxHxD	mm	1,200 x 360 x 650	1,200 x 360 x 650	1,200 x 360 x 650
		Gross	WxHxD	mm	1,447 x 425 x 769	1,447 x 425 x 769	1,447 x 425 x 769
	Weight	Net/Gross		kg	56.0	60.5	60.5
	Sound	Sound Pressure Level		dB(A)	48	50	50
	Accessories	Wired Remote Controller		(Default)	MWR-WH01	MWR-WH01	MWR-WH01
		Filter		-	Option	Option	Option
		Drain Pump		-	Option	Option	Option
Outdoor Unit	Compressor	Maker / Type			SAMSUNG / Twin BLDC	SAMSUNG / Twin BLDC	SAMSUNG / Twin BLDC
		Model			G5T450FUAEX	G5T450FUAEX	G5T450FUAEX
		Capacity		Btu/hr	46,500	46,500	46,500
		Motor Type			BLDC	BLDC	BLDC
		Motor Input		W	4,115	4,115	4,115
		Oil Type			POE	POE	POE
		Oil Charge		cc	1,100	1,100	1,100
		O.L.P Type			Internal	Internal	Internal
	Outdoor Fan	Type			Propeller	Propeller	Propeller
		Motor Output		W	165	165	165
	Dimensions	Net	WxHxD	mm	932 x 1,165 x 375	932 x 1,165 x 375	932 x 1,165 x 375
		Gross	WxHxD	mm	1,091 x 1,286 x 472	1,091 x 1,286 x 472	1,091 x 1,286 x 472
	Weight	Net/Gross		Kg	100 / 115	100 / 115	105/120
	Sound	Sound Pressure Level		dB(A)	57	57	57
Others	Cable	Power (ODU, Max. 10m)		mm2	2.5	2.5	4.0
		Power (IDU~ODU)		mm2	1.25	1.25	1.25
		Earth (IDU~ODU)		mm2	1.6	1.6	1.6
		Communication		mm2	0.75~1.25	0.75~1.25	0.75~1.25
	Pipe	Liquid pipe		inch(mm)	3/8" (9.52)	3/8" (9.52)	3/8" (9.52)
		Gas pipe		inch(mm)	3/4" (19.05)	3/4" (19.05)	3/4" (19.05)
		Standard Length		m	5	5	5
		Max Length/Elevation		m	75 / 30	75 / 30	75 / 30

1) Nominal Capacity are based on (Equivalent refrigerant piping : 5m , Level differences : 0m);
- Cooling : Indoor temperature : 27℃ DB, 19℃ WB / Outdoor temperature : 35℃ DB, 24℃ WB
- Heating : Indoor temperature : 20℃ DB, 15℃ WB / Outdoor temperature : 7℃ DB, 6℃ WB

2) Sound pressure was acquired in a dead room. Thus actual noise level may be different depending on the installation conditions.

3) Specifications are subject to change without prior notice for product improvement.

1. Indoor Unit

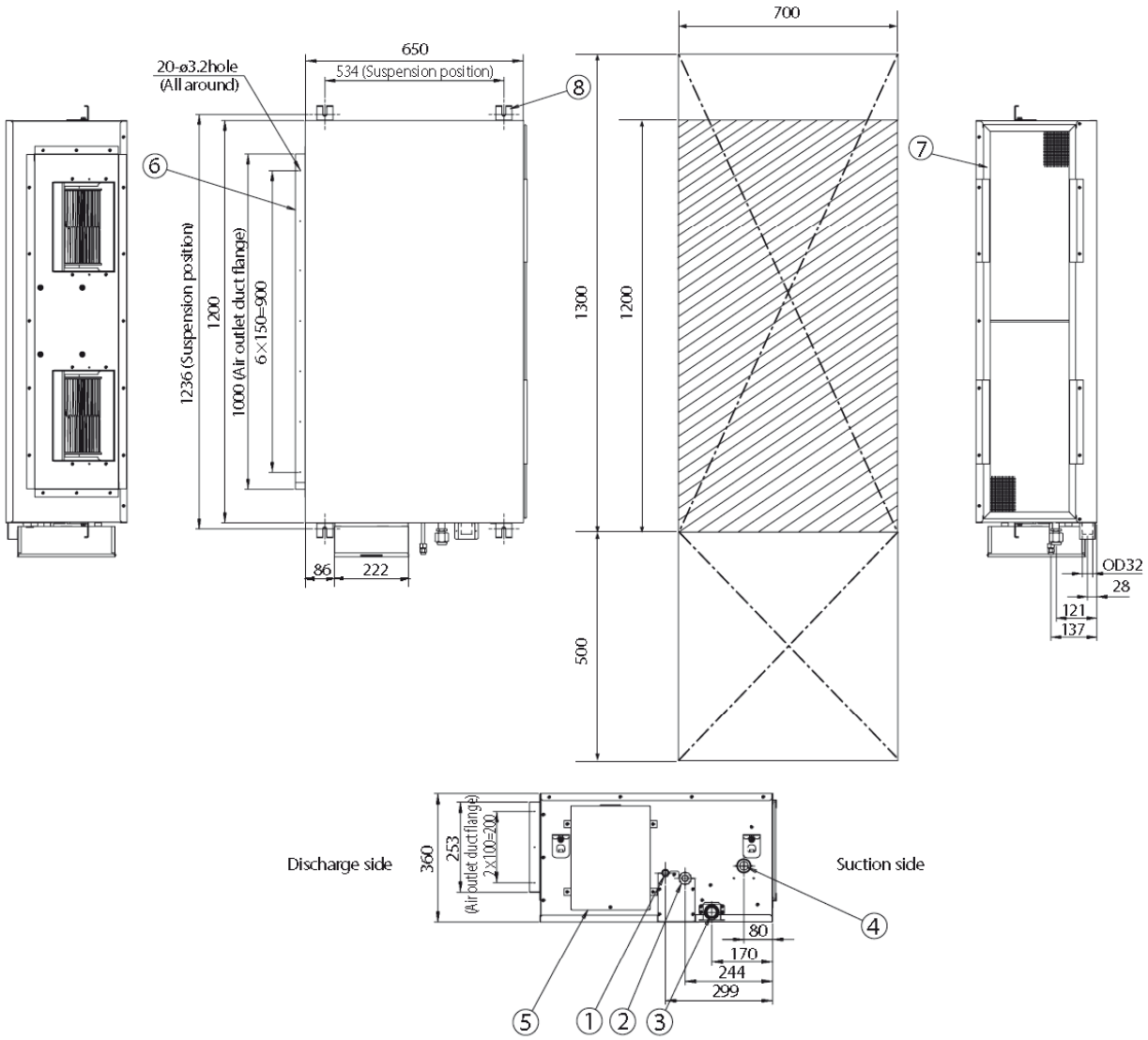

No.	Name	Description
①	Liquid Pipe Connection	Φ9.52mm (3/8”)
②	Gas Pipe Connection	Φ19.05mm (3/4”)
③	Drain Pipe Connection	OD 32mm / ID 26mm (without drain pump)
④	Drain Pipe Connection	Using Drain Pump (Optional)
⑤	Power Supply Connection	
⑥	Air Discharge Flange	
⑦	Air Filter	
⑧	Hook	3/8” or M10

2. Outdoor Unit

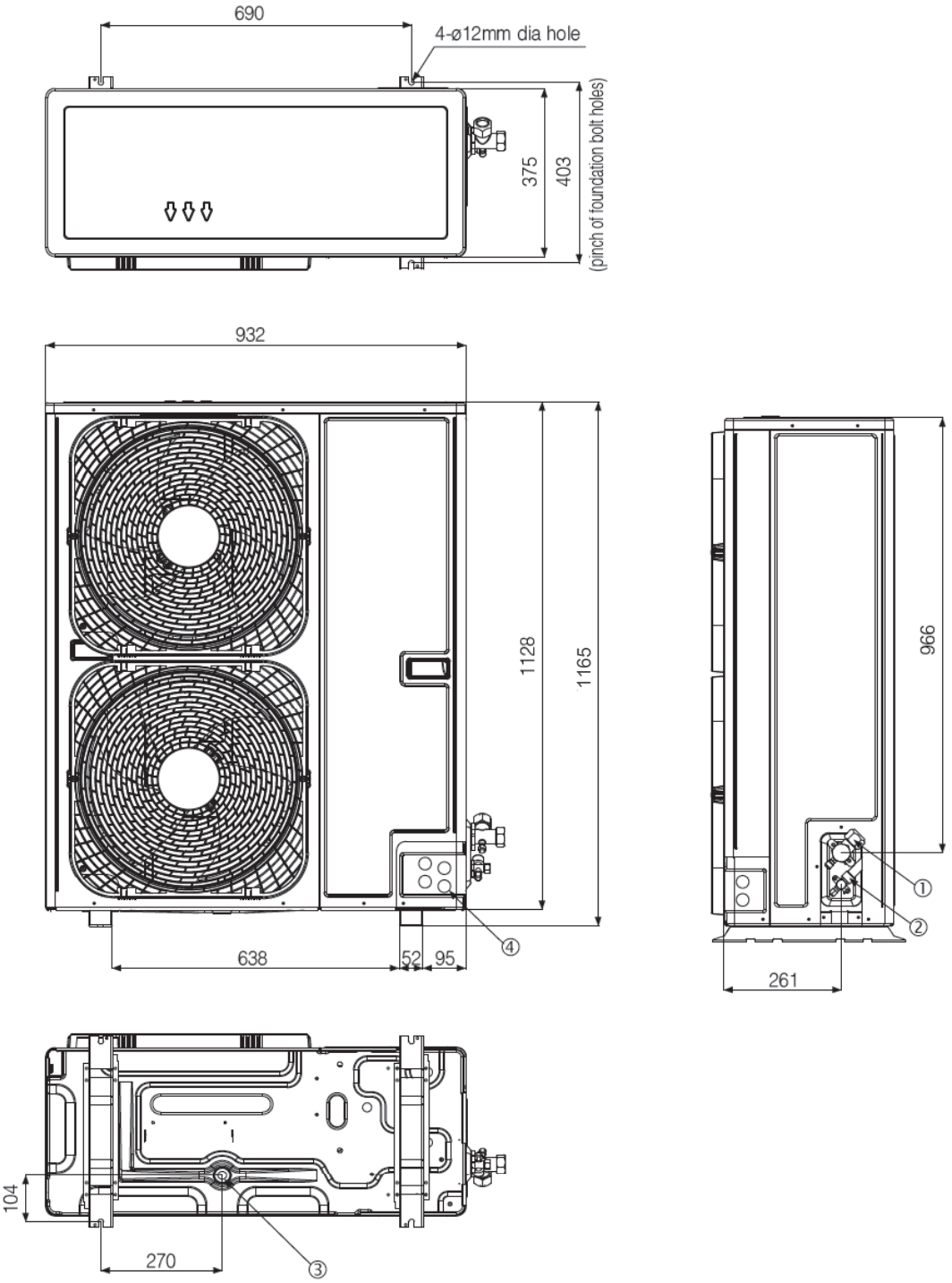

No.	Name	Description
①	Gas Pipe Connection	Φ9.52mm
②	Liquid Pipe Connection	Φ19.05mm
③	Condensate Drain Hole	Φ20mm
④	Power & Communication Wiring Hole	Φ27.8mm x 6

1. Capacity Table

1-1. 10.5kW

① Cooling

Indoor Temp.		Outdoor Temperature (DB)														
		-15℃			7℃			35℃			45℃			50℃		
WB	DB	TC	SHC	PI	TC	SHC	PI	TC	SHC	PI	TC	SHC	PI	TC	SHC	PI
14	20	13.9	9.8	3.2	16.3	11.2	3.3	9.8	8.6	3.2	8.1	8.1	3.9	7.0	6.9	4.4
16	22	14.3	10.0	3.3	16.7	11.4	3.3	10.0	8.8	3.3	8.3	8.3	4.0	7.2	7.0	4.5
18	25	14.6	10.3	3.4	17.1	11.7	3.4	10.2	9.0	3.4	8.5	8.5	4.1	7.4	7.2	4.6
19	27	15.0	10.5	3.5	17.5	12.0	3.5	10.5	9.2	3.4	8.7	8.7	4.2	7.6	7.4	4.7
22	30	15.3	10.8	3.6	17.9	12.3	3.6	10.8	9.4	3.5	8.9	8.9	4.3	7.8	7.5	4.8
24	32	15.7	11.0	3.6	18.4	12.6	3.7	11.0	9.6	3.6	9.1	9.1	4.4	7.9	7.7	5.0

② Heating

Indoor Temp.	Outdoor Temperature (DB)									
	-20℃		-15℃		-10℃		7℃		24℃	
DB	TC	PI	TC	PI	TC	PI	TC	PI	TC	PI
16	11.7	6.4	13.0	6.6	13.3	6.7	11.4	3.1	15.4	3.3
18	11.6	6.4	12.9	6.6	13.2	6.7	11.3	3.1	15.3	3.2
20	11.5	6.3	12.8	6.5	13.0	6.6	11.2	3.0	15.1	3.2
21	11.4	6.2	12.7	6.4	12.9	6.5	11.1	3.0	14.9	3.2
22	11.3	6.2	12.5	6.4	12.8	6.5	11.0	3.0	14.8	3.1
24	11.2	6.1	12.4	6.3	12.6	6.4	10.9	2.9	14.7	3.1

1-2. 12.5kW

① Cooling

Indoor Temp.		Outdoor Temperature (DB)														
		-15℃			7℃			35℃			45℃			50℃		
WB	DB	TC	SHC	PI	TC	SHC	PI	TC	SHC	PI	TC	SHC	PI	TC	SHC	PI
14	20	15.1	10.6	3.5	16.7	12.8	3.4	11.6	10.3	3.8	8.2	8.0	3.9	7.6	7.4	4.8
16	22	15.5	10.8	3.6	17.1	13.1	3.5	11.9	10.6	3.9	8.4	8.2	4.0	7.8	7.6	4.9
18	25	15.8	11.1	3.7	17.6	13.5	3.6	12.2	10.8	4.0	8.6	8.4	4.1	8.0	7.8	5.0
19	27	16.2	11.4	3.8	18.0	13.8	3.7	12.5	11.1	4.1	8.8	8.6	4.2	8.2	8.0	5.1
22	30	16.6	11.7	3.9	18.4	14.1	3.8	12.8	11.4	4.2	9.0	8.8	4.3	8.4	8.2	5.2
24	32	17.0	11.9	3.9	18.9	14.5	3.9	13.1	11.6	4.3	9.2	9.0	4.4	8.6	8.4	5.4

② Heating

Indoor Temp.	Outdoor Temperature (DB)									
	-20℃		-15℃		-10℃		7℃		24℃	
DB	TC	PI	TC	PI	TC	PI	TC	PI	TC	PI
16	11.9	6.1	13.3	6.3	14.4	6.9	14.3	4.3	21.2	4.8
18	11.8	6.1	13.1	6.3	14.3	6.9	14.1	4.3	21.0	4.7
20	11.7	6.0	13.0	6.2	14.2	6.8	14.0	4.2	20.8	4.7
21	11.6	5.9	12.9	6.1	14.0	6.7	13.9	4.2	20.6	4.7
22	11.5	5.9	12.7	6.1	13.9	6.7	13.7	4.2	20.4	4.6
24	11.4	5.8	12.6	6.0	13.7	6.6	13.6	4.1	20.2	4.6

1. Capacity Table

1-3. 14.0kW

① Cooling

Indoor Temp.		Outdoor Temperature (DB)														
		-15℃			7℃			35℃			45℃			50℃		
WB	DB	TC	SHC	PI	TC	SHC	PI	TC	SHC	PI	TC	SHC	PI	TC	SHC	PI
14	20	18.7	13.6	4.6	18.2	13.4	4.5	13.0	11.3	4.3	10.2	9.7	4.7	8.2	8.0	5.1
16	22	19.1	13.9	4.7	18.6	13.7	4.6	13.3	11.6	4.4	10.4	9.9	4.8	8.4	8.2	5.3
18	25	19.6	14.2	4.8	19.1	14.0	4.8	13.7	11.9	4.5	10.7	10.1	5.0	8.6	8.4	5.4
19	27	20.1	14.6	4.9	19.6	14.4	4.9	14.0	12.2	4.6	11.0	10.4	5.1	8.8	8.6	5.5
22	30	20.6	15.0	5.0	20.0	14.7	5.0	14.3	12.5	4.7	11.2	10.6	5.2	9.0	8.8	5.7
24	32	21.1	15.3	5.1	20.5	15.1	5.1	14.7	12.8	4.8	11.5	10.9	5.3	9.3	9.0	5.8

② Heating

Indoor Temp.	Outdoor Temperature (DB)									
	-20℃		-15℃		-10℃		7℃		24℃	
DB	TC	PI	TC	PI	TC	PI	TC	PI	TC	PI
16	12.1	6.5	13.5	6.6	14.9	6.7	16.3	5.0	22.9	5.6
18	12.0	6.5	13.4	6.5	14.8	6.6	16.2	5.0	22.6	5.6
20	11.9	6.4	13.2	6.4	14.6	6.5	16.0	4.9	22.4	5.5
21	11.8	6.3	13.1	6.4	14.5	6.5	15.8	4.9	22.2	5.4
22	11.7	6.3	13.0	6.3	14.3	6.4	15.7	4.8	22.0	5.4
24	11.5	6.2	12.9	6.3	14.2	6.3	15.5	4.8	21.7	5.3

2. Capacity Correction

2-1. 10.5 / 12.5 / 14.0kW

① Cooling

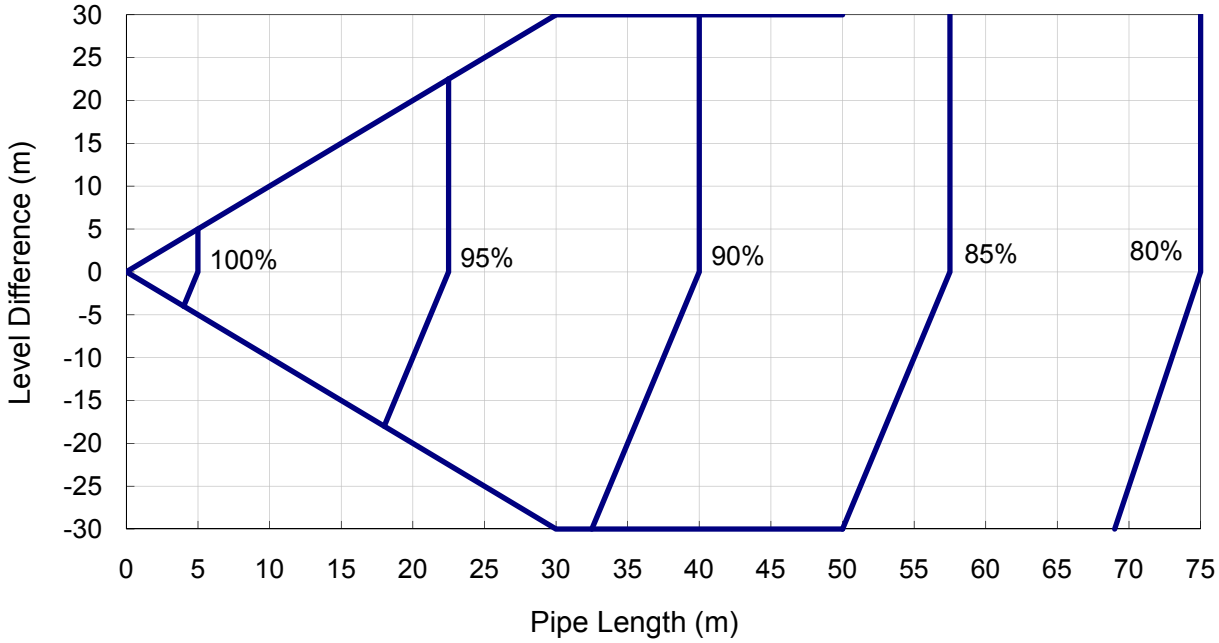

② Heating

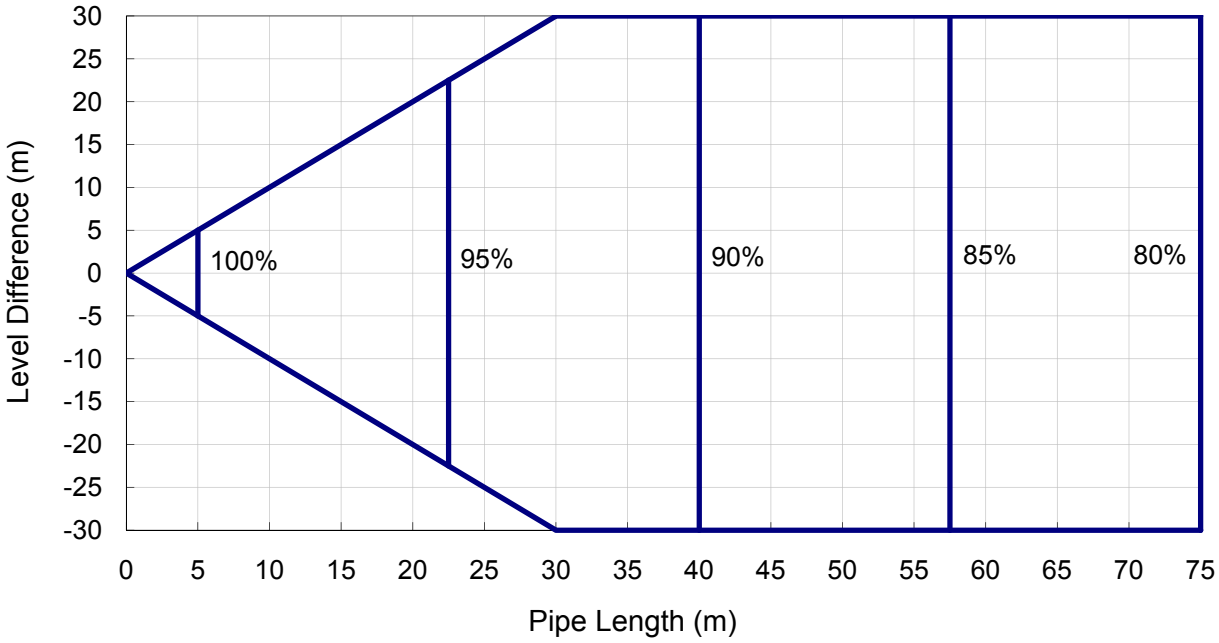

3. P-Q Curve

※ Adjust option code according to the actual installation condition (External Static Pressure).

3-1. 10.5kW

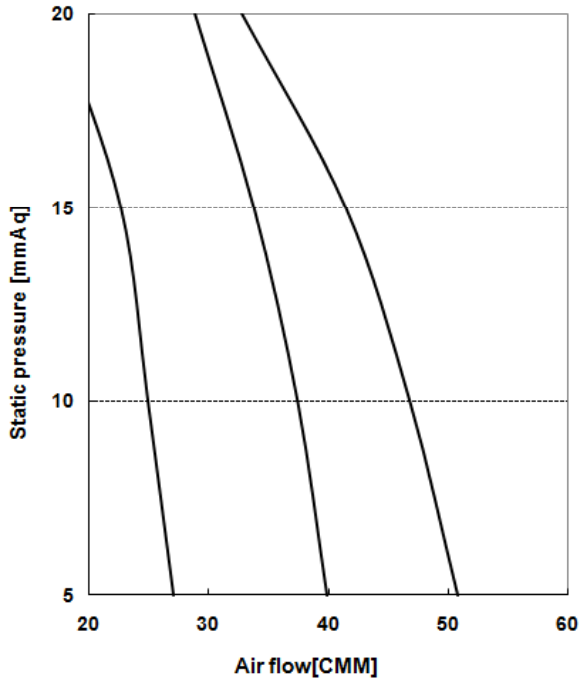

ESP (mmAq)	Option Code
5	015773-11C301
10	015773-11C337
15	015773-1173F7
20	

3-2. 12.5 / 14.0kW

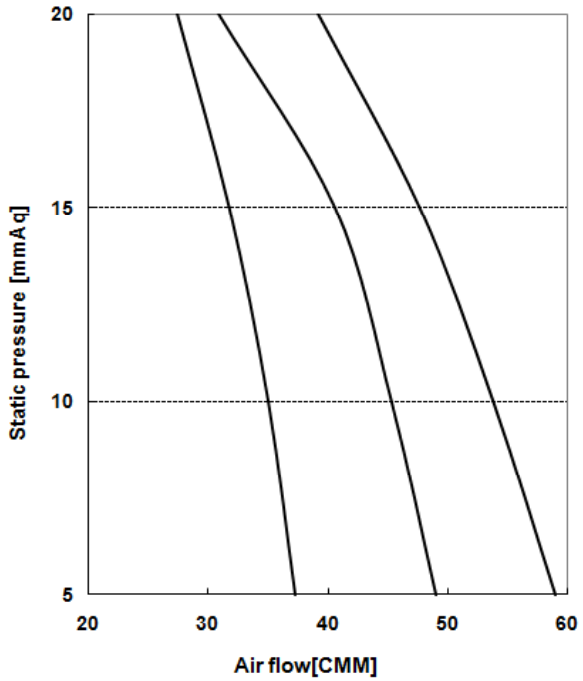

ESP (mmAq)	Option Code
5	015773-12C342 (12.5kW) 015773-13C342 (14.0kW)
10	015774-12C2F2 (12.5kW) 015774-13C2F2 (14.0kW)
15	
20	

Note

◆ ESP : External Static Pressure

◆ The graphs display the available external static pressure range of installed indoor units. Therefore, they do not reflect the actual change of external static pressure and airflow rate according to adjusted airflow (High–Mid–Low) of installed indoor units.

4. Sound Pressure Level

4-1. Operation Sound Level

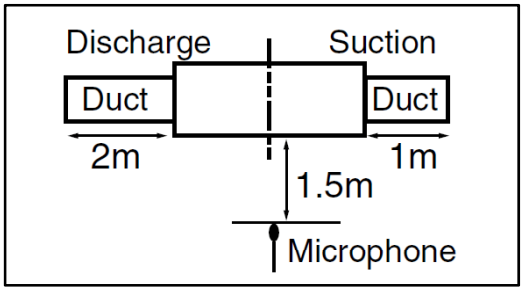

Model	High
NS105HHXEA	48
NS125HHXEA	50
NS140HHXEA	50

Note

- ◆ These operation value were obtained in a dead room. Sound pressure level will vary depending on a range of factors such as the construction of the particular room where the equipment is installed.
- ◆ Operation sound level may differ depending on operation and ambient conditions.

4-2. NC Curve

① NS105HHXEA

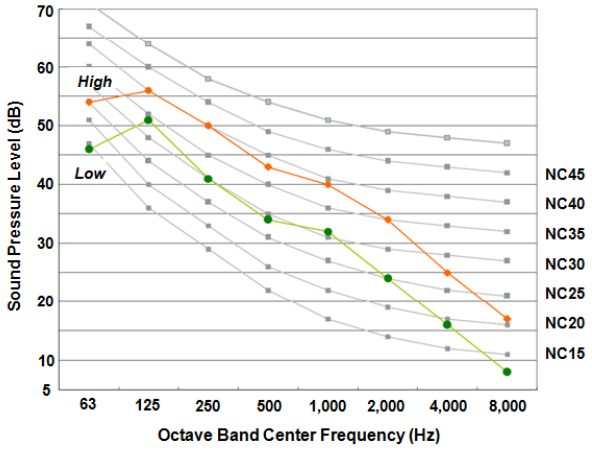

② NS125HHXEA

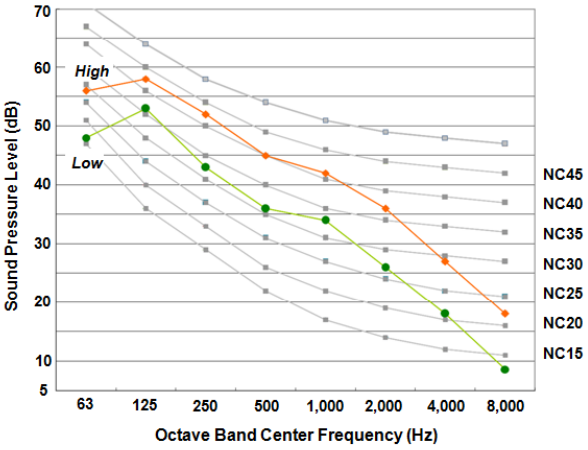

③ NS140HHXEA

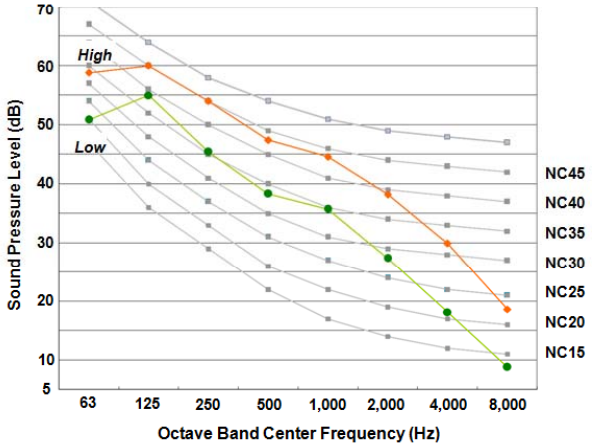

1. Cycle Diagram

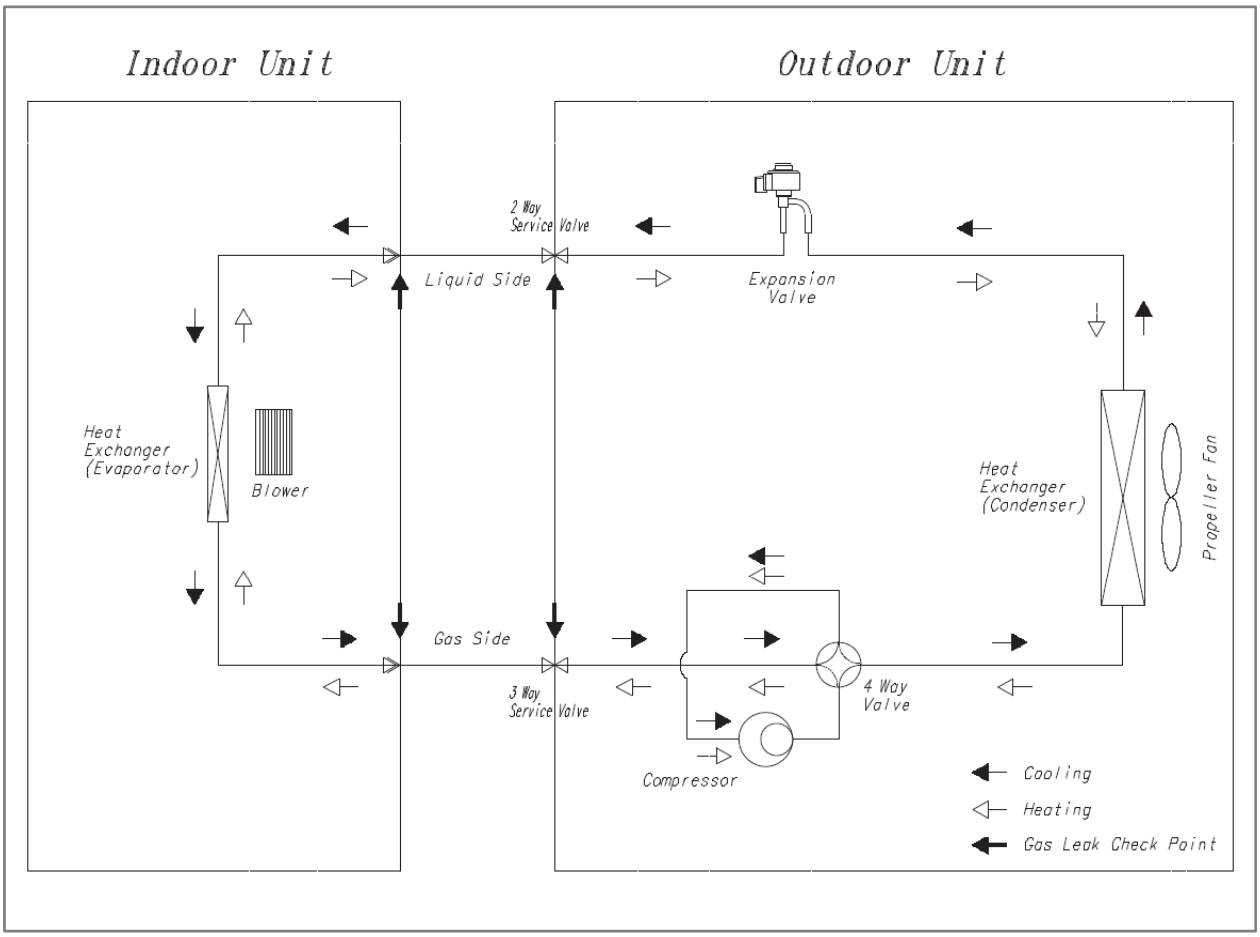

2. Wiring Diagram

2-1. Indoor Unit

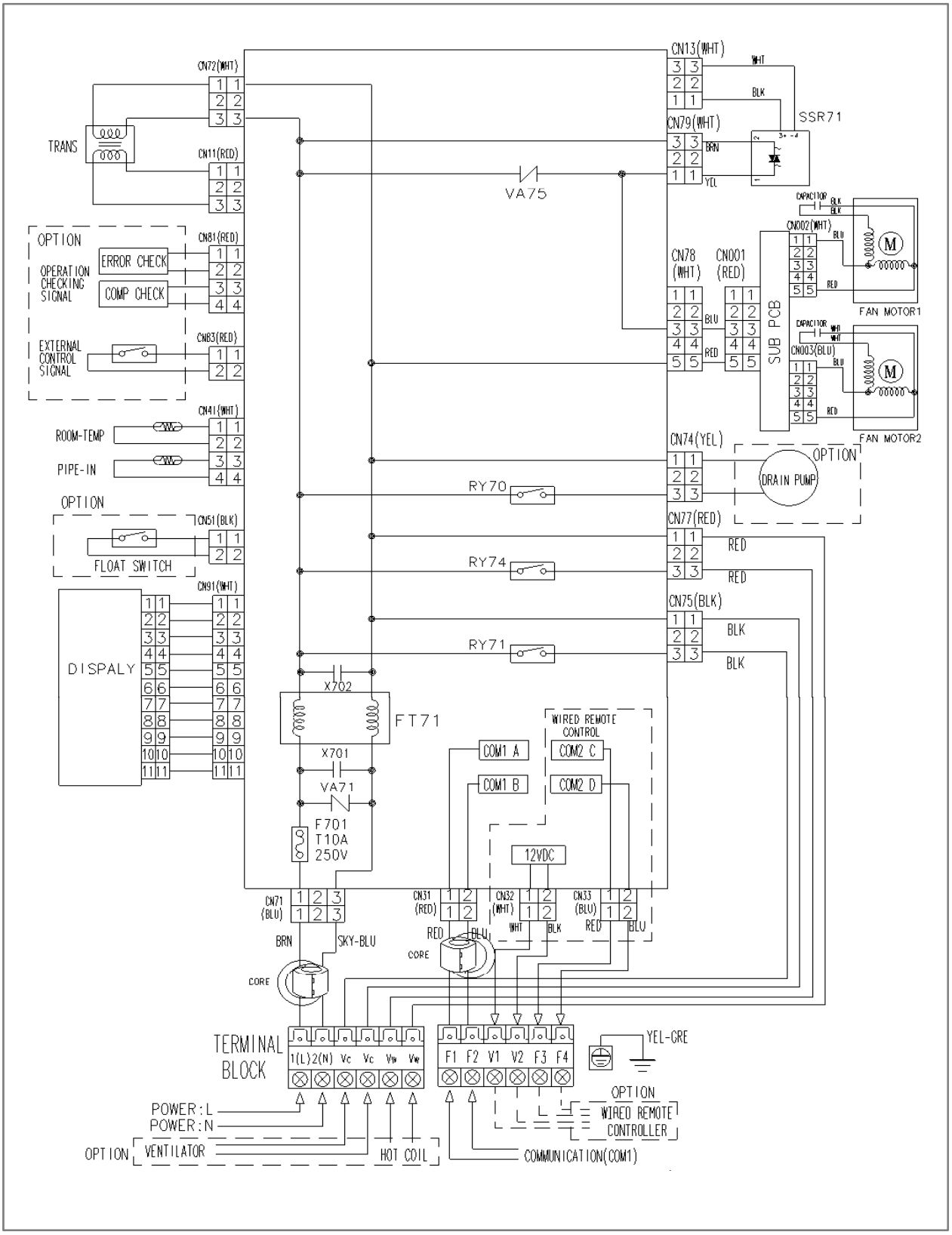

V. Cycle & Wiring Diagram

2. Wiring Diagram

2-2. Outdoor Unit

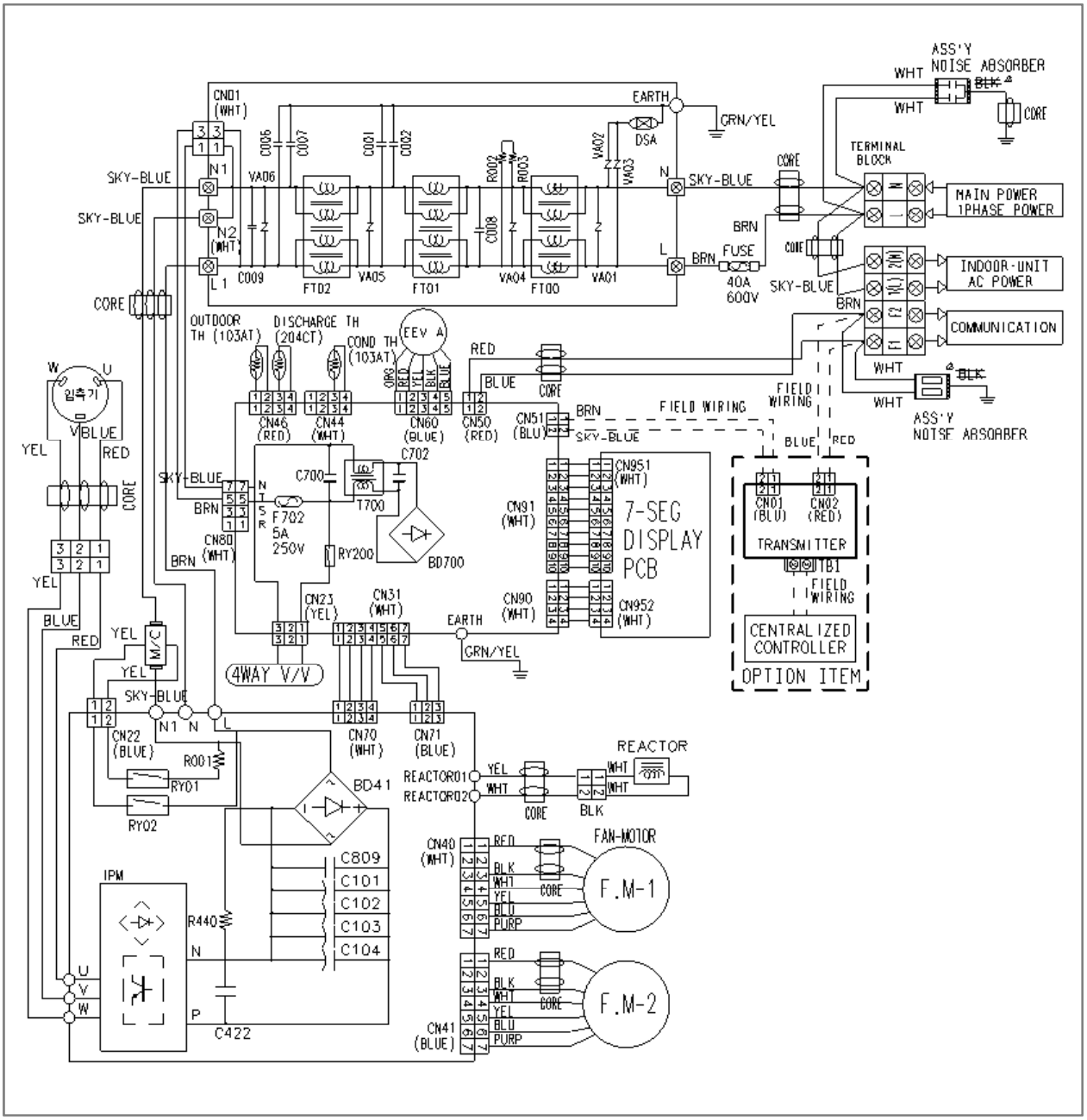

1. Space Requirement

1-1. Single Installation

(Unit:mm)

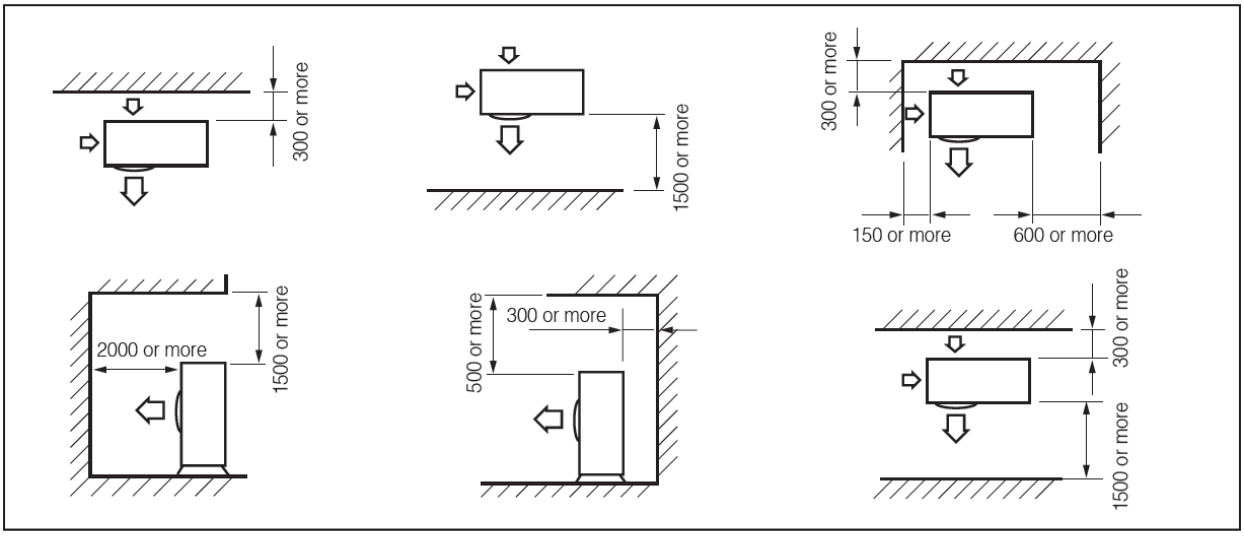

1-2. Group Installation

(Unit:mm)

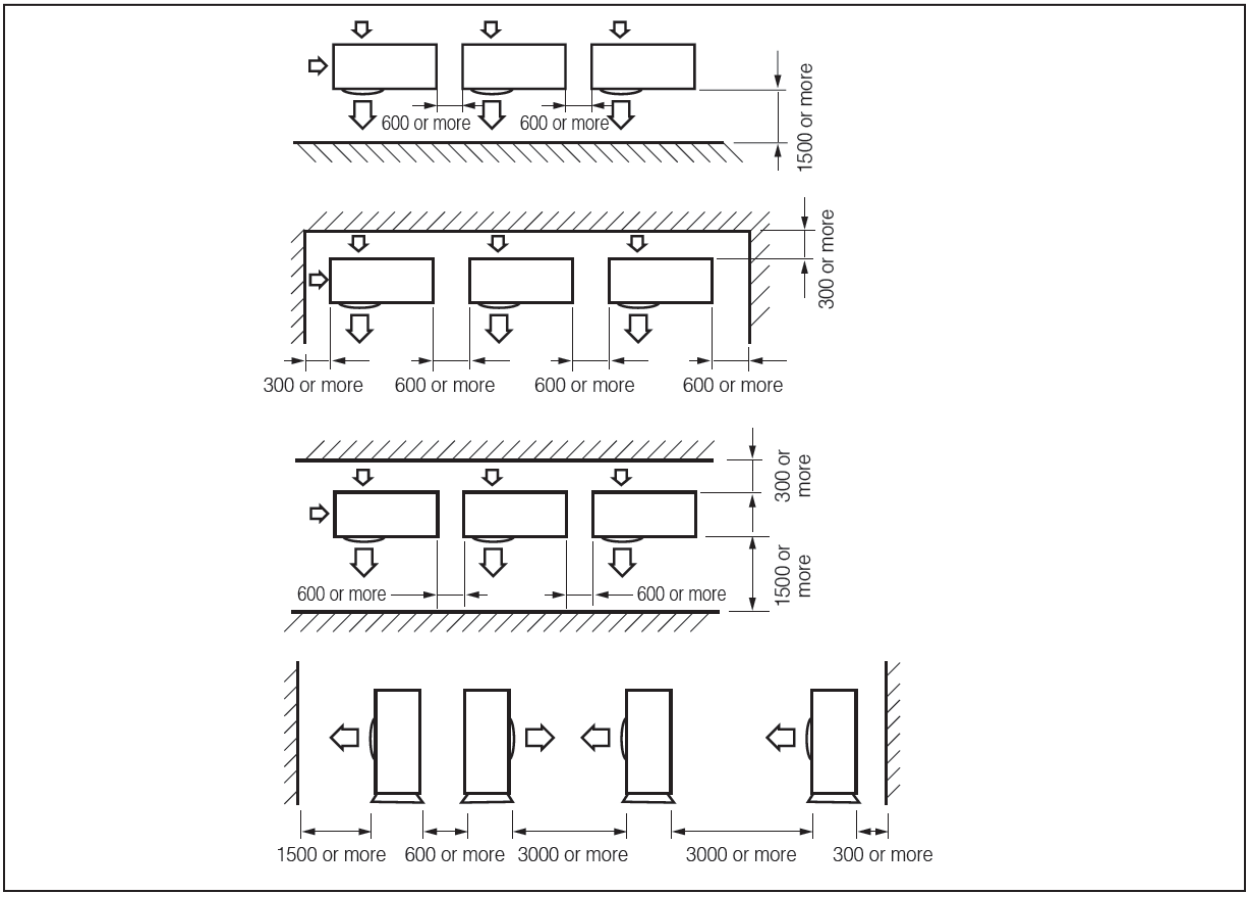

Note

- ◆ The suggested installation above has concerned minimum installation space.
- ◆ To secure enough service space and performance of system, take account of more sufficient space.

2. Error Code

No.	Display	Explanation
1	101	Indoor Unit Communication Error
2	102	Indoor/Outdoor Unit Communication Time Out Error 60 Packet Over Data
3	121	Indoor Temp. Sensor (Open/Short Error)
4	122	Indoor Unit Eva. in Temp. Sensor (Open/Short Error)
5	128	Indoor Unit Eva. in Sensor Separation
6	153	Indoor Float Switch 2nd Detection
7	201	Indoor unit is not connected
8	202	1 Min. Time Out Communication
9	203	Communication Error between Outdoor Main & Inverter Micom. (Occurred after 1 minute detection in Main & Inverter)
10	221	Outdoor Temp. Sensor Error (Open/Short Error)
11	237	Cond. Temp. Sensor Error (Open/Short Error)
12	251	Inverter Comp. Dis. Temp. Sensor Error (Open/Short Error)
13	416	Discharge Over Temp.
14	425	Power Cable Misconnection Error
15	440	Operation Condition Secession (Heating)
16	441	Operation Condition Secession (Cooling)
17	450	Outdoor unit ~ Indoor unit Communication Wire Misconnection (Connected to Power Terminal)
18	458	Outdoor Fan 1 Error
19	461	[Inverter] Comp. Starting Error
20	462	Primary Current Over Trip Error
21	464	[Inverter] DC Peak Error (O.C)
22	465	Comp. Limit Error
23	466	DC-Link Volatage Under/Over Error
24	467	[Inverter] Comp. Rotation Error
25	468	[Inverter] Current Sensor Error
26	469	[Inverter] DC Link Sensor Error
27	471	[Inverter] EEPROM Read/Write Error
28	473	Comp. Lock Error
29	474	[Inverter] Heatsink Temp. Over Error
30	475	Outdoor Fan 2 Error
31	554	Outdoor Unit Refrigerant Full Leakage (Gas Leak Error)
32	556	Outdoor Unit Capacity Setup Option Error
33	601	Communication Error between Indoor unit & Wired Remote Comtrol
34	602	Communication Error between Master & Slave Wired Remote Contro
35	606	COM1/COM2 Cross-installed Error
36	ER	Error of Setting Option for Wired Remote Control COM2

CAC

Technical Data Book

SAMSUNG ELECTRONICS

Samsung Electronics Co., LTD.
Digital Air Solution Division, Sales & Marketing Team, SE Dept.

Head Office (Suwon Korea) 416, Maetan-3Dong, Yeongtong-Gu, Suwon City Gyeonggi-Do, Korea 443-742
TEL : 82-31-200-6454 Website : www.dvmsystem.com Email: Airconditioner@samsung.com

❊ Specifications may be subject to change without prior notice for the continuous product improvement.