Refrigerant R410A

INVERTER

AIR CONDITIONER

Duct type

DESIGN & TECHNICAL MANUAL

SINGLE INDOOR

ARTA36LATU
ARTA45LATU

OUTDOOR

AOTA36LATL AOTA36LBTL AOTA36LCTL
AOTA45LATL AOTA45LBTL AOTA45LCTL

FUJITSU GENERAL LIMITED

1. INDOOR UNIT

DUCT TYPE :

ARTA36LATU
ARTA45LATU

D2D_AR034E_06
2014.10.17

DUCT TYPE
ARTA36-45LA

CONTENTS

1. INDOOR UNIT

1. FEATURE

■ MODEL

INDOOR UNIT	OUTDOOR UNIT
ARTA36LATU	AOTA36LATL AOTA36LBTL AOTA36LCTL
ARTA45LATU	AOTA45LATL AOTA45LBTL AOTA45LCTL

AOTA36LATL
AOTA45LATL
AOTA36LBTL
AOTA45LBTL

AOTA36LCTL
AOTA45LCTL

■ FEATURES

● Energy saving

High energy saving was realized by making the indoor unit and outdoor unit fan motor and compressor all DC and optimal design of the refrigerant cycle.

● Flexible installation

A high installation of degree of freedom according to the construction of the ceiling.

Embedded in Ceiling

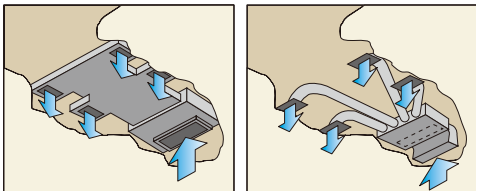

Hanging from Ceiling

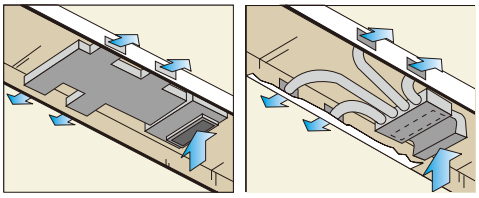

● Slim & compact design

In the case of bottom suction type, as seen from lower rear part.

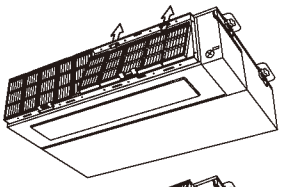

Control Box united with main unit

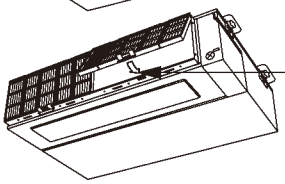

One-touch operating and easy-to-install long-life filter (optional)

In addition to the slim height of 270 mm which is our sales point, further compactification is attained by reducing 65 mm from the width with the flanking control box embedded inside the chassis.

● Two-direction on drain piping

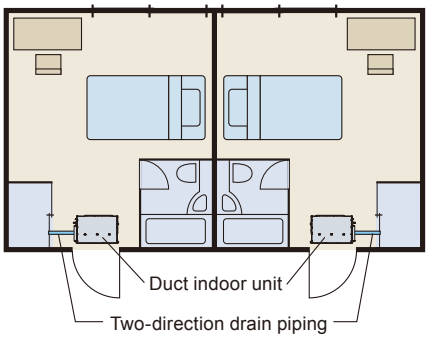

DUCT TYPE
ARTA36-45LA

● Easy maintenance

It can easily access the fan and the motor by the divided panel structure.

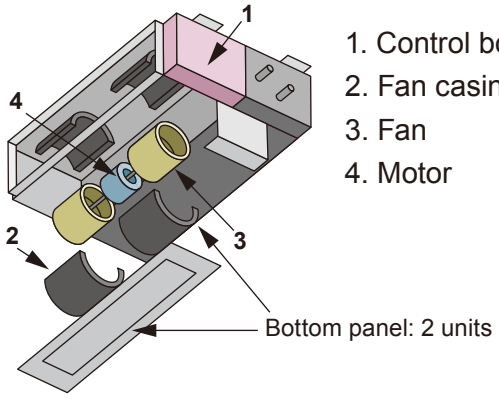

1. Control box
2. Fan casing
3. Fan
4. Motor

Structural improvement is attained by making the bottom panel two pieces, front and rear.

The internal fan casing is also manufactured in two pieces, namely upper and lower. The maintenance of the motor and fan can be easily carried out by removing the rear panel and the lower part of the casing while leaving the main chassis installed.

● Quiet operation

Quiet operation at *26db(A) [36type], *28dB(A) [45 type] possible by quiet mode.

* See our measurement conditions page (01-20).

2. WIRED REMOTE CONTROLLER

■ FEATURES

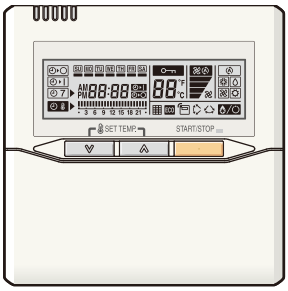

- ∗ Various timer setup (ON / OFF / WEEKLY) are possible.
- ∗ Equipped with weekly timer as standard function.(2 times Start / Stop per day for a week)
- ∗ When setting up a timer, operation mode and a temperature setup can be changed.
- ∗ When a failure occurs,the error code is displayed. (Maximum of 16)
- ∗ Error indication.(A maximum of 16 error histories are memorizable.)
- ∗ Up to 16 indoor units can be simultaneously controlled.
- ∗ Economy operation are possible.
- ∗ Easy installation with a slim shape with no bulge in the back.
- ∗ The room temperature can be controlled by being detected the temperature accurately with built-in thermo sensor.

● Simple function setting

Setting of the air conditioner selection function is performed by remote controller.

● High performance and compact size

Three functions are combined in one unit.

● Built-in timers

Weekly timer

Possible to set ON/OFF time to operate twice each day of the week.

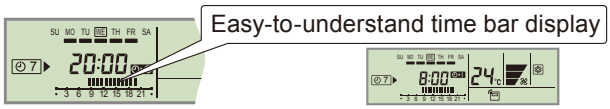

Setup screen example
(Set to Wednesday: 8:00 to 20:00.)

Screen after setup

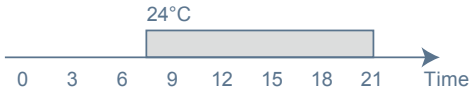

Setback timer

Possible to set temperature for two time spans and for each day of the week.

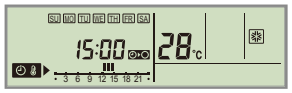

Setup screen example
(Set from Sunday to Saturday: 12:00 to 15:00, 28 °C.)

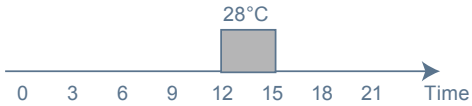

At "Weekly timer" + "Set back timer" setup

24°C →28°C→24°C

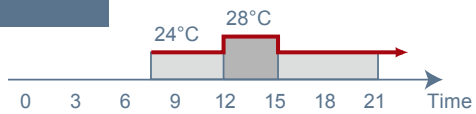

● Easy-to-understand operation

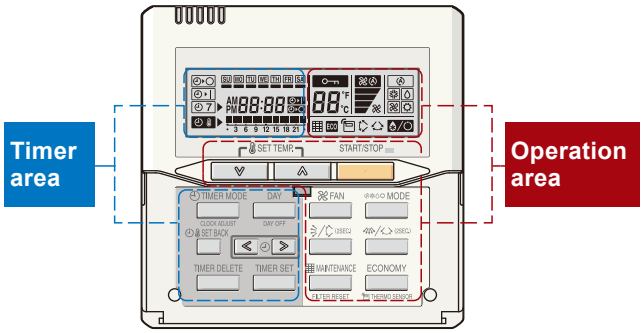

[Variable timer control]

The operation/display sections are zoned according to time and operation, enabling variable programming to match application.

● Simple installation

Components are compatible with standard switch boxes. Flat back construction allows equipment to be installed wherever it is needed.

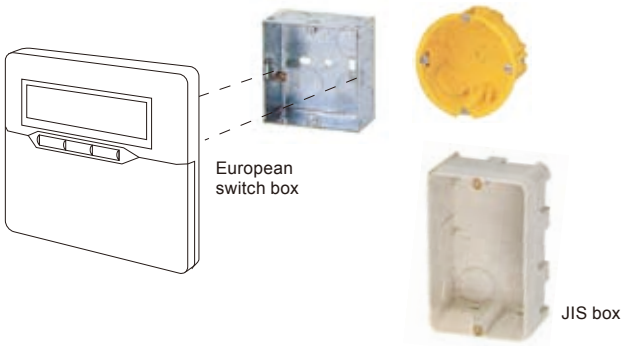

DUCT TYPE
ARTA36-45LA

■ FUNCTIONS

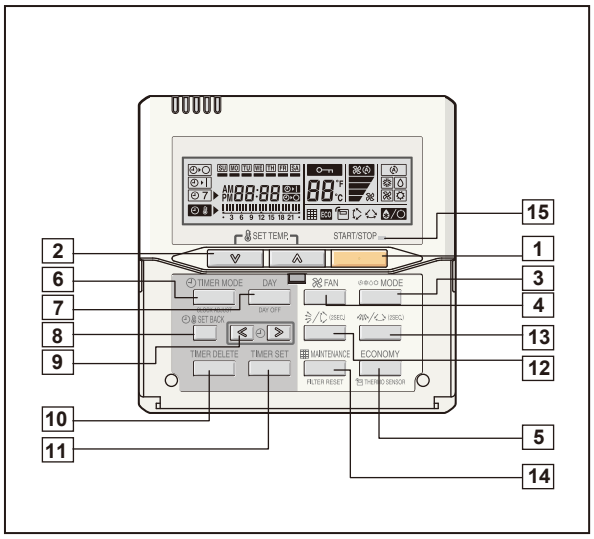

Display panel

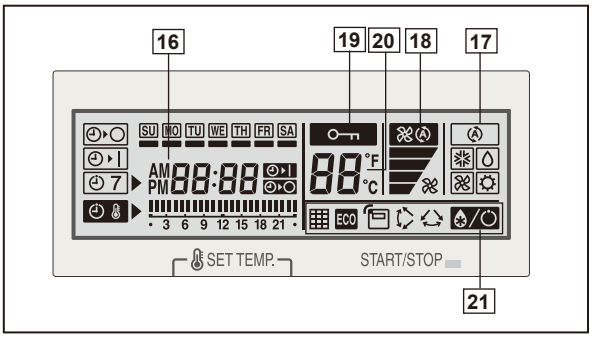

1 **START/STOP button**
Pressed to start and stop operation.

2 **SET TEMP button**
Selects the setting temperature.

3 **MODE button**
Selects the operating mode (AUTO, HEAT, FAN, COOL, DRY).

4 **FAN button**
Selects the fan speed (AUTO, QUIET, LOW, MED, HIGH).

5 **ECONOMY button**
Turns the economy efficient mode on and off.

6 **Timer mode (CLOCK ADJUST) button**
Selects the timer mode (OFF TIMER, ON TIMER, WEEKLY TIMER). Set the current time.

7 **DAY(DAY OFF) button**
Temporarily cancels of one day timer.

8 **SET BACK button**
Pressed to select the set back timer.

9 **SET TIME button**
Pressed to set time.

10 **TIMER DELETE button**
The schedule of a weekly timer is deleted.

11 **TIMER SET button**
Sets the date, hour, minute and on-off time.

12 **Vertical airflow direction and swing button**
Push for two seconds to change the swing mode.

13 **Horizontal airflow direction and swing button**
Push for two seconds to change the swing mode.

14 **FILTER RESET button**

15 **Operation lamp**
Lights during operation and when the timer is on.

16 **Timer and clock display**

17 **Operation mode display**

18 **Fan speed display**

19 **Operation lock display**

20 **Temperature display**

21 **Function display**
- Defrost display
- Thermo sensor display
- Economy display
- Vertical swing display
- Horizontal swing display
- Filter display

Functions will be different due to type of indoor unit.
For details, please see operation manual.

■ DIMENSION

[Unit : mm]

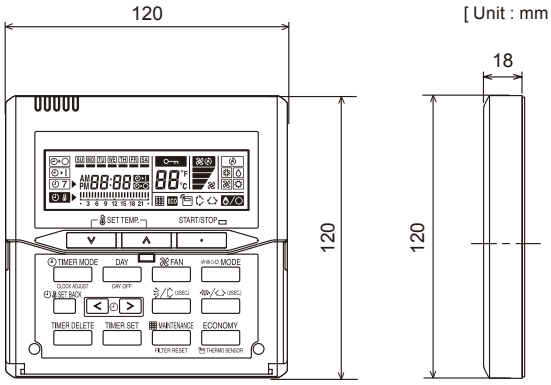

Front View

Side View

■ SPECIFICATION

SIZE	(H x W x D mm)	120 x 120 x 18
WEIGHT	(g)	160
CABLE LENGTH	(m)	10
POWER	(V)	12

■ WIRING SPECIFICATIONS

Use	Cable size	Wire type	Remarks
Remote controller cable	0.33mm^2 (22AWG)	Polar 3 core	Use shielded cable (field supplied) in accordance with the regional cable standard.

3. SPECIFICATIONS

Type					DUCTED MODEL	
					INVERTER HEATPUMP	
Model name		Indoor unit			ARTA36LATU	ARTA45LATU
		Outdoor unit			AOTA36LATL , AOTA36LBTU	AOTA45LATL , AOTA45LBTL
Power source					240 V~ 50 Hz	
Available voltage range					198 - 264 V	
Capacity	Cooling	Rated		kW	10.0	12.5
				Btu/h	34100	42700
		Min-Max		kW	3.8-11.2	4.0-14.0
				Btu/h	13000-38200	13700-47800
	Heating	Rated		kW	11.2	14.0
				Btu/h	38200	47800
		Min-Max		kW	4.0-14.0	4.2-16.2
				Btu/h	13700-47800	14300-55300
Input power	Cooling	Rated		kW	3.11	3.89
		Max			4.54	4.78
	Heating	Rated			3.02	3.83
		Max			4.54	4.78
Current	Cooling	Rated		A	13.0	16.3
		Max			19.0	20.0
	Heating	Rated			12.7	16.1
		Max			19.0	20.0
EER		Cooling		kW/kW	3.21	3.21
COP		Heating			3.71	3.66
Moisture removal				l/h (pints/h)	3.0 (6.3)	3.5 (7.4)
Fan	Airflow rate	Cooling	High	l/s (m^3/h)	514 (1850)	583 (2100)
			Med		431 (1550)	486 (1750)
			Low		342 (1230)	375 (1350)
			Quiet		269 (970)	297 (1070)
		Heating	High		514 (1850)	583 (2100)
			Med		431 (1550)	486 (1750)
			Low		342 (1230)	375 (1350)
			Quiet		269 (970)	297 (1070)
	Type × Q'ty				Sirocco × 2	
	Motor output			W	197	
Recommended static pressure				Pa	30 to 150	
Sound pressure level		Cooling	High	dB(A)	40	42
			Med		36	38
			Low		31	32
			Quiet		26	28
		Heating	High		40	42
			Med		36	38
			Low		31	32
			Quiet		26	28
Heat exchanger type		Dimensions (H × W × D)		mm	294 × 1000 × 53.2	
		Fin pitch			1.40	
		Rows x Stages			4 × 14	
		Pipe type			Copper	
		Fin type			Aluminium	
Enclosure		Material			Steel	
		Colour			-	
Dimensions (H×W ×D)	Net			mm	270 × 1135 × 700	
	Gross				300 × 1320 × 790	
Weight	Net			kg	40	
	Gross				48	
Connection pipe	Size	Liquid		mm	Ø9.52 (3 / 8 in.)	
		Gas			Ø15.88 (5 / 8 in.)	
	Method				Flare	
Operation range		Cooling		°C	18 to 32	
				%RH	80 or less	
		Heating		°C	16 to 30	
Remote controller type					Wired	
Drain pipe	Material				Steel	
	Size			mm	Outer diameter: 38.0 / Inner diameter: 36.0	
International Protection rating					IPX0	

Note :
Specifications are based on the following conditions.
Cooling : Indoor temperature of 27 °CDB / 19 °CWB.and outdoor temperature of 35 °CDB/24 °CWB.
Heating : Indoor temperature of 20 °CDB / 15 °CWB.and outdoor temperature of 7 °CDB/6 °CWB.
Standard static pressure : ARTA36LATU:47Pa ARTA45LATU:60Pa
Pipe length : 7.5 m, Height difference : 0 m.(Outdoor unit - Indoor unit)
Static pressure mode : ARTA36LATU:Normal ARTA45LATU:High static pressure mode 1
Sound pressure level : Install a 2m duct to the outlet port and a 1m duct to the suction poit and measure.
The maximum current is the maximum value when operated within the operation range(temperature)

DUCT TYPE
ARTA36-45LA

Type					DUCTED MODEL	
					INVERTER HEATPUMP	
Model name		Indoor unit			ARTA36LATU	ARTA45LATU
		Outdoor unit			AOTA36LCTL	AOTA45LCTL
Power source					240 V~ 50 Hz	
Available voltage range					198 - 264 V	
Capacity	Cooling	Rated		kW	10.0	11.5
				Btu/h	34100	39300
		Min.-Max.		kW	3.8-11.2	4.0-13.3
				Btu/h	13000-38200	13700-45400
	Heating	Rated		kW	11.2	14.0
				Btu/h	38200	47800
		Min.-Max.		kW	4.0-14.0	4.2-15.5
				Btu/h	13700-47800	14300-52900
Input power	Cooling	Rated		kW	3.11	3.56
		Max.			4.66	5.02
	Heating	Rated			3.02	4.02
		Max.			4.78	5.02
Current	Cooling	Rated		A	13.0	14.9
		*Max.			19.5	21.0
	Heating	Rated			12.7	16.8
		*Max.			20.0	21.0
EER		Cooling		kW/kW	3.21	3.23
COP		Heating			3.71	3.48
Moisture removal				l/h (pints/h)	3.0 (5.3)	4.0 (7.0)
Fan	Airflow rate	Cooling	High	l/s (m^3/h)	514 (1850)	583 (2100)
			Med		431 (1550)	486 (1750)
			Low		342 (1230)	375 (1350)
			Quiet		269 (970)	297 (1070)
		Heating	High		514 (1850)	583 (2100)
			Med		431 (1550)	486 (1750)
			Low		342 (1230)	375 (1350)
			Quiet		269 (970)	297 (1070)
	Type × Q'ty				Sirocco × 2	
	Motor output			W	197	
Recommended static pressure				Pa	30 to 150	
Sound pressure level		Cooling	High	dB(A)	40	42
			Med		36	38
			Low		31	32
			Quiet		26	28
		Heating	High		40	42
			Med		36	38
			Low		31	32
			Quiet		26	28
Heat exchanger type		Dimensions (H × W × D)		mm	294 × 1000 × 53.2	
		Fin pitch			1.40	
		Rows x Stages			4 × 14	
		Pipe type			Copper	
		Fin type			Aluminium	
Enclosure		Material			Steel	
		Colour			-	
Dimensions (H×W ×D)	Net			mm	270 × 1135 × 700	
	Gross				300 × 1320 × 790	
Weight	Net			kg	40	
	Gross				48	
Connection pipe	Size	Liquid		mm	Ø 9.52 (3 / 8 in.)	
		Gas			Ø15.88 (5 / 8 in.)	
	Method				Flare	
Operation range		Cooling		°C	18 to 32	
				%RH	80 or less	
		Heating		°C	16 to 30	
Remote controller type					Wired	
Drain pipe	Material				Steel	
	Size			mm	Outer diameter: 38.0 / Inner diameter: 36.0	
International Protection rating					IPX0	

Note :
Specifications are based on the following conditions.
Cooling : Indoor temperature of 27 °CDB / 19 °CWB.and outdoor temperature of 35 °CDB/24 °CWB.
Heating : Indoor temperature of 20 °CDB / 15 °CWB.and outdoor temperature of 7 °CDB/6 °CWB.
Standard static pressure : ARTA36LATU:47Pa ARTA45LATU:60Pa
Pipe length : 7.5 m, Height difference : 0 m.(Outdoor unit - Indoor unit)
Static pressure mode : ARTA36LATU:Normal ARTA45LATU:High static (Mode 1)
Sound pressure level : Install a 2m duct to the outlet port and a 1m duct to the suction poit and measure.
The maximum current is the maximum value when operated within the operation range(temperature)
*The maximum current is the total current of indoor unit and outdoor unit.

4. DIMENSIONS

■ MODEL: ARTA36LA, ARTA45LA

(Unit : mm)

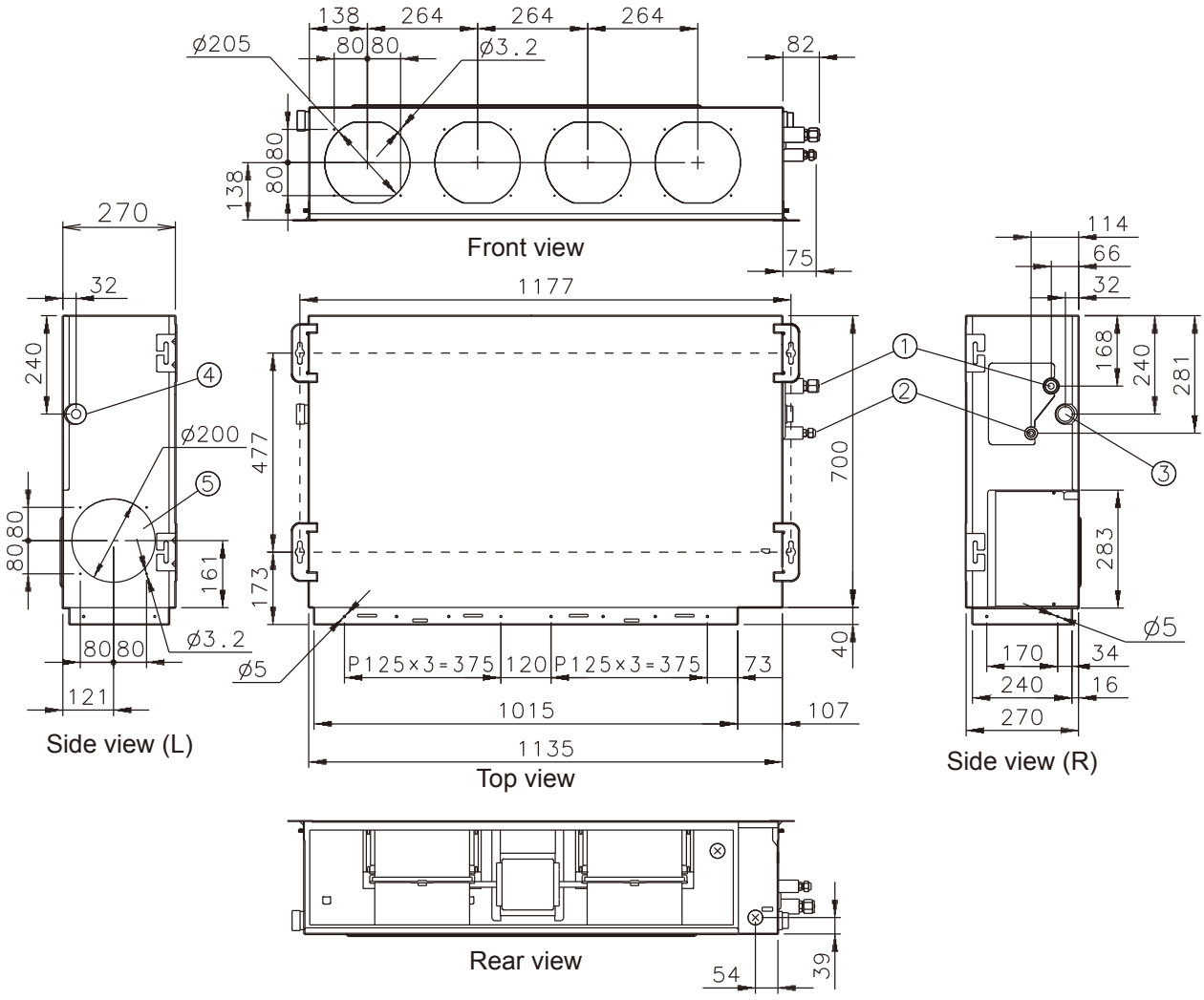

① Refrigerant piping flare connection (Gas)
② Refrigerant piping flare connection (Liquid)
③ Drain piping connection
④ Drain piping connection with cap.
⑤ Knock out hole for fresh air.

DUCT TYPE
ARTA36-45LA

■ INSTALLATION PLACE

(Unit : mm)

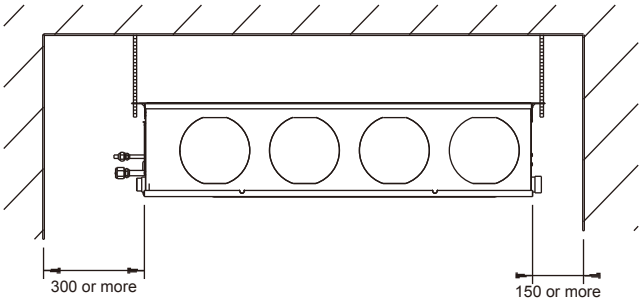

■ MAINTENANCE HOLE

It shall be possible to install and remove the control box.

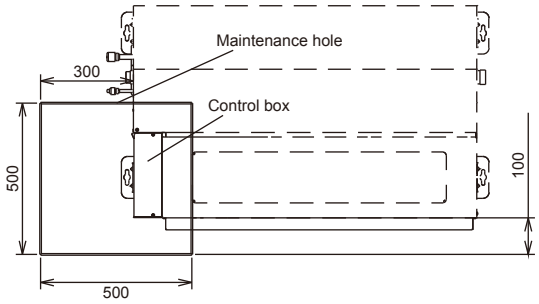

It shall be possible to install and remove the control box, fan units and filter.

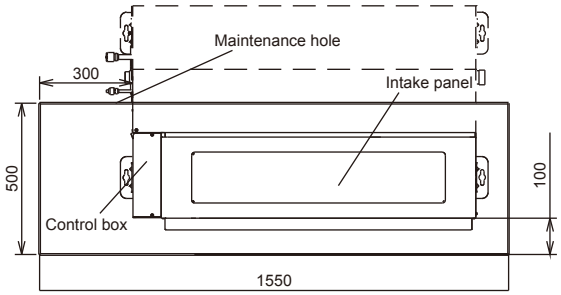

■ WHEN USING A SQUARE DUCT

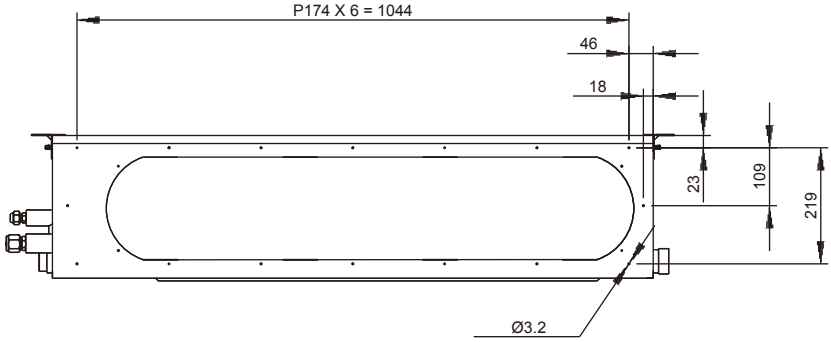

■ BOTTOM AIR INTAKE HOLE

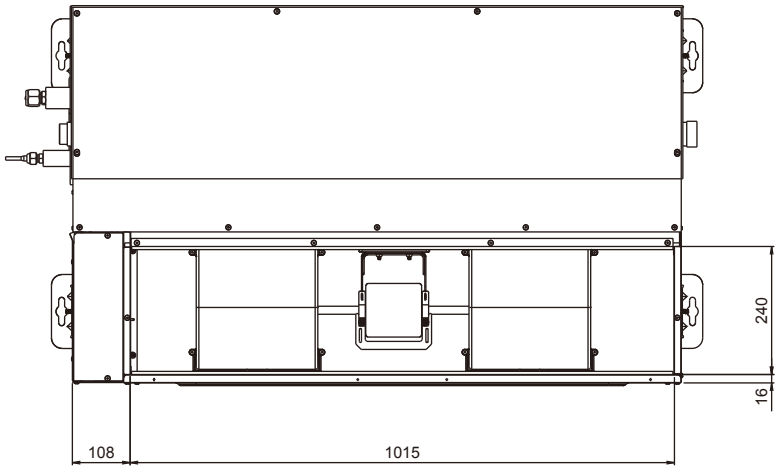

5. WIRING DIAGRAMS

■ MODEL: ARTA36LA, ARTA45LA

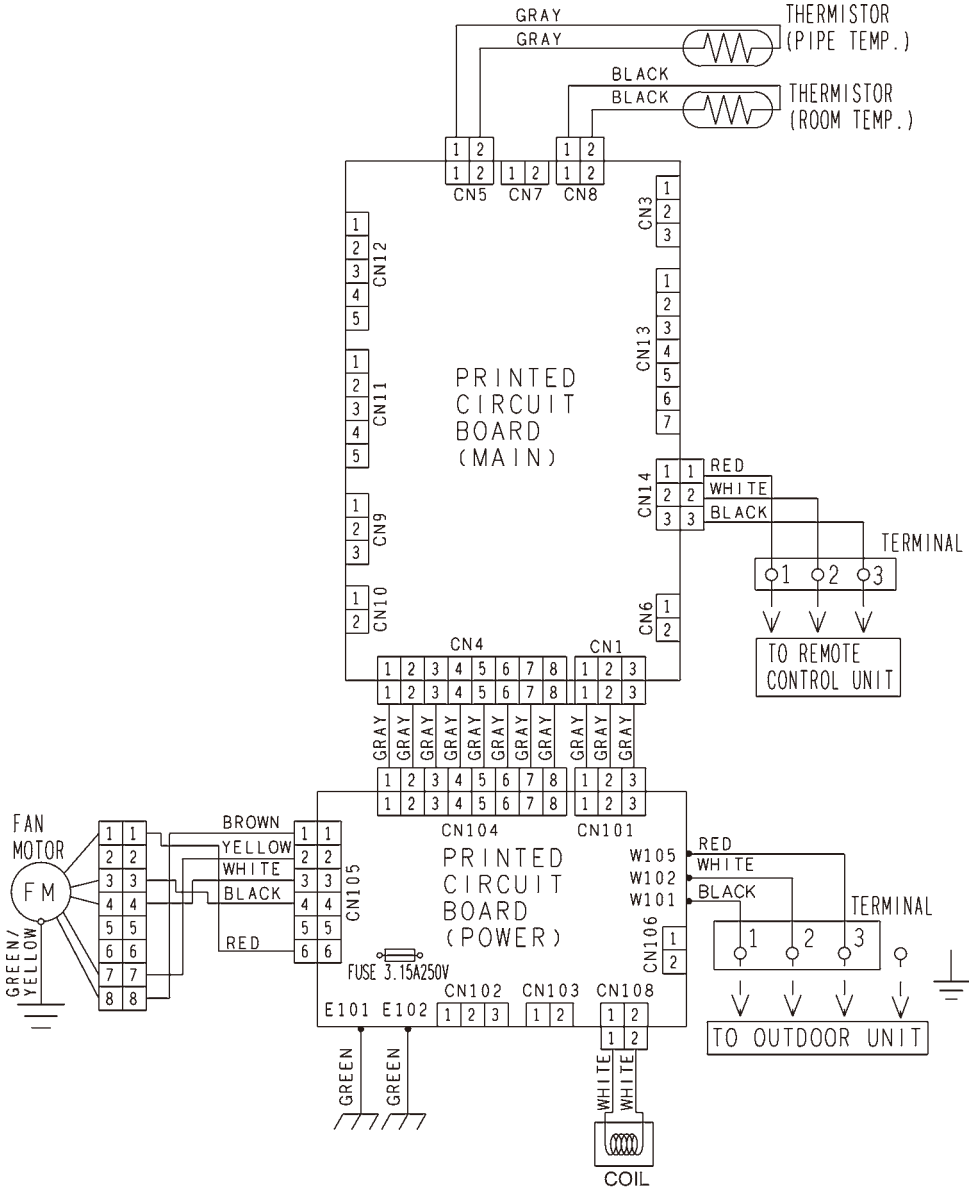

6. CAPACITY TABLE

6-1. COOLING CAPACITY

This table is created using the maximum capacity.

■ MODEL: ARTA36LA / AOTA36LA, AOTA36LB, AOTA36LC

AFR	32.2

		Indoor temperature																				
	°CDB	18			21			23			25			27			29			32		
	°CWB	12			15			16			18			19			21			23		
Outdoor temperature	°CDB	TC	SHC	IP	TC	SHC	IP	TC	SHC	IP	TC	SHC	IP	TC	SHC	IP	TC	SHC	IP	TC	SHC	IP
	-15	8.68	6.29	1.21	9.67	6.33	1.23	10.00	6.88	1.24	10.66	6.91	1.25	10.99	7.46	1.26	11.65	7.43	1.27	12.31	7.91	1.28
	-10	8.37	6.18	1.44	9.33	6.21	1.47	9.65	6.75	1.47	10.28	6.78	1.49	10.6	7.32	1.50	11.24	7.29	1.51	11.87	7.76	1.53
	0	8.53	6.24	1.3	9.5	6.28	1.32	9.82	6.83	1.32	10.47	6.85	1.34	10.79	7.40	1.34	11.44	7.37	1.36	12.09	7.85	1.37
	5	8.21	6.11	1.52	9.14	6.15	1.54	9.45	6.68	1.55	10.08	6.7	1.56	10.39	7.24	1.57	11.01	7.21	1.59	11.63	7.68	1.60
	10	8.23	6.12	1.47	9.17	6.16	1.49	9.48	6.69	1.5	10.11	6.72	1.52	10.42	7.25	1.52	11.05	7.22	1.54	11.67	7.69	1.55
	15	7.89	5.99	1.69	8.79	6.03	1.72	9.09	6.55	1.73	9.68	6.57	1.75	9.98	7.10	1.76	10.58	7.07	1.77	11.18	7.53	1.79
	20	9.72	6.71	2.51	10.82	6.75	2.55	11.19	7.33	2.56	11.93	7.36	2.59	12.3	7.94	2.60	13.04	7.91	2.63	13.77	8.43	2.66
	25	9.58	6.66	2.6	10.67	6.70	2.64	11.03	7.28	2.66	11.76	7.3	2.68	12.13	7.89	2.70	12.85	7.85	2.72	13.58	8.37	2.75
	30	9.12	6.48	2.91	10.16	6.52	2.95	10.51	7.09	2.97	11.2	7.11	3.00	11.54	7.68	3.01	12.24	7.65	3.04	12.93	8.15	3.08
	35	8.85	6.37	3.37	9.86	6.4	3.42	10.19	6.96	3.44	10.86	6.98	3.47	11.2	7.54	3.49	11.87	7.51	3.52	12.54	8.00	3.56
	40	7.05	5.68	2.81	7.85	5.72	2.85	8.12	6.22	2.87	8.65	6.24	2.89	8.92	6.73	2.91	9.46	6.71	2.94	9.99	7.15	2.97
	46	4.98	4.95	2.24	5.54	4.98	2.27	5.73	5.42	2.28	6.11	5.43	2.31	6.30	5.87	2.32	6.68	5.85	2.34	7.05	6.23	2.37

■ MODEL: ARTA45LA / AOTA45LA, AOTA45LB

AFR	35.0

		Indoor temperature																				
	°CDB	18			21			23			25			27			29			32		
	°CWB	12			15			16			18			19			21			23		
Outdoor temperature	°CDB	TC	SHC	IP	TC	SHC	IP	TC	SHC	IP	TC	SHC	IP	TC	SHC	IP	TC	SHC	IP	TC	SHC	IP
	-15	10.59	8.61	1.51	11.80	8.66	1.54	12.20	9.42	1.55	13.00	9.45	1.56	13.41	10.20	1.57	14.21	10.16	1.58	15.02	10.82	1.60
	-10	10.20	8.42	1.79	11.37	8.47	1.81	11.75	9.21	1.82	12.53	9.24	1.84	12.92	9.98	1.85	13.69	9.94	1.87	14.47	10.58	1.89
	0	10.42	8.52	1.59	11.60	8.57	1.62	12.00	9.32	1.63	12.79	9.35	1.64	13.19	10.10	1.65	13.98	10.06	1.67	14.77	10.71	1.68
	5	10.01	8.33	1.86	11.15	8.37	1.89	11.53	9.10	1.90	12.29	9.13	1.92	12.68	9.86	1.93	13.44	9.83	1.95	14.20	10.47	1.97
	10	10.06	8.35	1.80	11.21	8.40	1.83	11.59	9.13	1.84	12.35	9.16	1.86	12.73	9.89	1.87	13.50	9.85	1.89	14.26	10.49	1.90
	15	9.63	8.14	2.07	10.72	8.19	2.10	11.09	8.90	2.12	11.82	8.93	2.14	12.18	9.64	2.15	12.92	9.60	2.17	13.65	10.23	2.19
	20	11.94	9.29	3.05	13.31	9.34	3.10	13.76	10.16	3.12	14.67	10.19	3.15	15.12	11.00	3.17	16.03	10.96	3.20	16.93	11.67	3.23
	25	11.79	9.22	3.16	13.14	9.28	3.21	13.58	10.09	3.22	14.48	10.12	3.26	14.93	10.93	3.27	15.82	10.88	3.31	16.72	11.59	3.34
	30	11.21	8.93	3.52	12.49	8.98	3.58	12.91	9.76	3.60	13.76	9.80	3.63	14.19	10.58	3.65	15.04	10.54	3.69	15.89	11.22	3.72
	35	11.06	8.84	4.21	12.32	8.89	4.27	12.74	9.67	4.29	13.58	9.70	4.34	14.00	10.48	4.36	14.84	10.44	4.40	15.68	11.12	4.45
	40	8.53	7.62	3.36	9.50	7.66	3.41	9.83	8.33	3.43	10.47	8.36	3.46	10.80	9.02	3.48	11.45	8.99	3.51	12.09	9.57	3.55
	46	6.03	6.44	2.72	6.71	6.48	2.76	6.94	7.04	2.77	7.40	7.06	2.80	7.63	7.63	2.82	8.09	7.60	2.84	8.54	8.09	2.84

■ MODEL: ARTA45LA / AOTA45LC

AFR	35.0

		Indoor temperature																				
	°CDB	18			21			23			25			27			29			32		
	°CWB	12			15			16			18			19			21			23		
Outdoor temperature	°CDB	TC	SHC	IP	TC	SHC	IP	TC	SHC	IP	TC	SHC	IP	TC	SHC	IP	TC	SHC	IP	TC	SHC	IP
	-15	11.23	8.75	2.66	12.50	8.81	2.70	12.93	9.57	2.72	13.78	9.60	2.74	14.21	10.37	2.76	15.06	10.33	2.79	15.91	11.01	2.81
	-10	11.32	8.89	2.56	12.61	8.94	2.60	13.04	9.72	2.61	13.90	9.76	2.64	14.33	10.54	2.65	15.19	10.49	2.68	16.05	11.18	2.70
	0	11.51	9.00	2.33	12.83	9.06	2.36	13.26	9.85	2.37	14.14	9.88	2.40	14.57	10.67	2.41	15.45	10.63	2.43	16.32	11.32	2.46
	5	11.26	8.89	2.40	12.54	8.94	2.44	12.97	9.72	2.45	13.83	9.75	2.47	14.25	10.53	2.49	15.11	10.49	2.51	15.96	11.17	2.53
	10	11.00	8.69	2.59	12.25	8.74	2.63	12.67	9.51	2.64	13.50	9.54	2.67	13.92	10.30	2.68	14.75	10.26	2.71	15.59	10.93	2.73
	15	10.73	8.62	2.78	11.95	8.67	2.83	12.36	9.43	2.84	13.18	9.46	2.87	13.58	10.22	2.88	14.40	10.18	2.91	15.21	10.84	2.94
	20	11.11	8.67	3.25	12.37	8.72	3.30	12.79	9.48	3.31	13.64	9.52	3.35	14.06	10.28	3.37	14.90	10.23	3.40	15.74	10.90	3.43
	25	10.95	8.62	3.45	12.19	8.67	3.51	12.61	9.43	3.53	13.44	9.46	3.56	13.86	10.21	3.58	14.69	10.17	3.62	15.52	10.84	3.65
	30	10.79	8.58	4.43	12.02	8.63	4.50	12.43	9.38	4.52	13.25	9.41	4.57	13.66	10.16	4.59	14.48	10.12	4.59	15.29	10.78	4.59
	35	10.51	8.46	4.43	11.70	8.51	4.50	12.10	9.25	4.52	12.90	9.28	4.57	13.30	10.02	4.59	14.10	9.98	4.59	14.90	10.63	4.59
	40	8.54	7.62	3.98	9.51	7.80	4.04	9.84	8.48	4.06	10.48	8.51	4.10	10.81	9.19	4.12	11.46	9.15	4.12	12.10	9.75	4.12
	46	6.55	6.52	3.30	7.30	6.79	3.35	7.55	7.39	3.37	8.04	7.41	3.40	8.29	8.00	3.42	8.79	7.97	3.42	9.29	8.49	3.42

AFR : Air Flow Rate (m^3/min)
TC : Total Capacity (kW)
SHC : Sensible Heat Capacity (kW)
IP : Input Power (kW)

DUCT TYPE
ARTA36-45LA

6-2. HEATING CAPACITY

This table is created using the maximum capacity.

■ MODEL: ARTA36LA / AOTA36LA, AOTA36LB, AOTA36LC

AFR	32.2

			Indoor temperature									
		°CDB	16		18		20		22		24	
Outdoor temperature	°CDB	°CWB	TC	IP	TC	IP	TC	IP	TC	IP	TC	IP
	-15	-16	10.17	3.61	9.93	3.68	9.68	3.76	9.44	3.83	9.20	3.91
	-10	-11	10.91	3.63	10.65	3.71	10.39	3.78	10.13	3.86	9.87	3.93
	-5	-7	11.69	3.62	11.41	3.70	11.13	3.78	10.86	3.85	10.58	3.93
	0	-2	12.75	3.62	12.44	3.69	12.14	3.77	11.84	3.84	11.53	3.92
	5	3	13.68	3.59	13.36	3.67	13.03	3.74	12.70	3.82	12.38	3.89
	7	6	14.70	3.62	14.35	3.69	14.00	3.77	13.65	3.85	13.30	3.92
	10	8	15.44	3.59	15.07	3.67	14.7	3.74	14.34	3.82	13.97	3.89
	15	10	14.72	3.17	14.37	3.24	14.02	3.30	13.67	3.37	13.32	3.44
	20	15	14.15	2.78	13.81	2.83	13.48	2.89	13.14	2.95	12.80	2.99
	24	18	14.92	2.75	14.57	2.81	14.21	2.86	13.86	2.92	13.50	2.97

■ MODEL: ARTA45LA / AOTA45LA, AOTA45LB

AFR	35.0

			Indoor temperature									
		°CDB	16		18		20		22		24	
Outdoor temperature	°CDB	°CWB	TC	IP	TC	IP	TC	IP	TC	IP	TC	IP
	-15	-16	11.58	4.19	11.31	4.28	11.03	4.37	10.75	4.46	10.48	4.54
	-10	-11	12.51	4.19	12.22	4.28	11.92	4.36	11.62	4.45	11.32	4.54
	-5	-7	13.43	4.20	13.11	4.29	12.79	4.37	12.47	4.46	12.15	4.55
	0	-2	14.50	4.20	14.15	4.29	13.81	4.37	13.46	4.46	13.12	4.55
	5	3	15.93	4.21	15.55	4.30	15.17	4.39	14.79	4.47	14.41	4.56
	7	6	17.01	4.19	16.60	4.28	16.20	4.37	15.79	4.46	15.39	4.54
	10	8	17.74	4.19	17.32	4.28	16.90	4.37	16.47	4.45	16.05	4.54
	15	10	16.63	3.51	16.23	3.58	15.84	3.66	15.44	3.73	15.04	3.80
	20	15	15.75	3.05	15.37	3.11	15.00	3.17	14.62	3.24	14.25	3.29
	24	18	16.76	3.05	16.36	3.11	15.96	3.17	15.56	3.24	15.16	3.29

■ MODEL: ARTA45LA / AOTA45LC

AFR	35.0

			Indoor temperature									
		°CDB	16		18		20		22		24	
Outdoor temperature	°CDB	°CWB	TC	IP	TC	IP	TC	IP	TC	IP	TC	IP
	-15	-16	10.89	4.23	10.63	4.32	10.37	4.41	10.12	4.50	9.86	4.59
	-10	-11	11.84	4.35	11.56	4.44	11.28	4.53	11.00	4.62	10.72	4.71
	-5	-7	12.83	4.41	12.53	4.50	12.22	4.59	11.91	4.59	11.61	4.59
	0	-2	13.77	4.41	13.44	4.50	13.12	4.59	12.79	4.59	12.46	4.59
	5	3	15.06	4.41	14.70	4.50	14.34	4.59	13.98	4.59	13.62	4.59
	7	6	16.28	4.41	15.89	4.50	15.50	4.59	15.11	4.59	14.73	4.59
	10	8	16.78	4.41	16.38	4.50	15.98	4.59	15.58	4.59	15.18	4.59
	15	10	16.55	3.96	16.16	4.04	15.77	4.12	15.37	4.12	14.98	4.12
	20	15	15.79	3.50	15.42	3.58	15.04	3.65	14.66	3.65	14.29	3.65
	24	18	16.63	3.50	16.23	3.58	15.84	3.65	15.44	3.65	15.04	3.65

AFR : Air Flow Rate (m^3/min)
TC : Total Capacity (kW)
IP : Input Power (kW)

DUCT TYPE
ARTA36-45LA

7. FAN PERFORMANCE AND CAPACITY

7-1. NORMAL MODE

■ MODEL: ARTA36LA

			Static pressure (Pa)							
			7	10	13	19	21	30	34	47
FAN SPEED	Hi	m^3/h	-	-	-	-	-	2020	1990	1850
		l/s	-	-	-	-	-	561	553	514
		CFM	-	-	-	-	-	1189	1171	1089
	Med	m^3/h	-	-	-	-	1685	1595	1550	-
		l/s	-	-	-	-	468	443	431	-
		CFM	-	-	-	-	992	939	912	-
	Low	m^3/h	-	-	1325	1255	1230	-	-	-
		l/s	-	-	368	349	342	-	-	-
		CFM	-	-	780	739	724	-	-	-
	Quiet	m^3/h	1020	1000	970	-	-	-	-	-
		l/s	283	278	269	-	-	-	-	-
		CFM	600	589	571	-	-	-	-	-

Q-h Characteristic curve

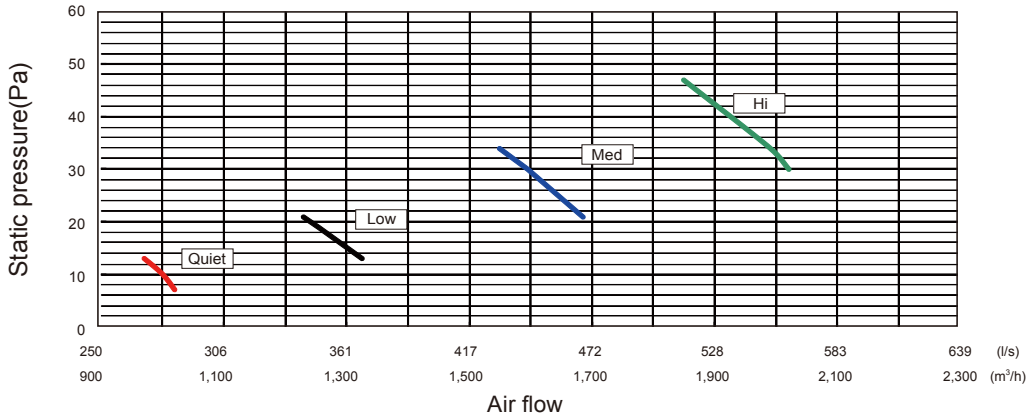

COOLING

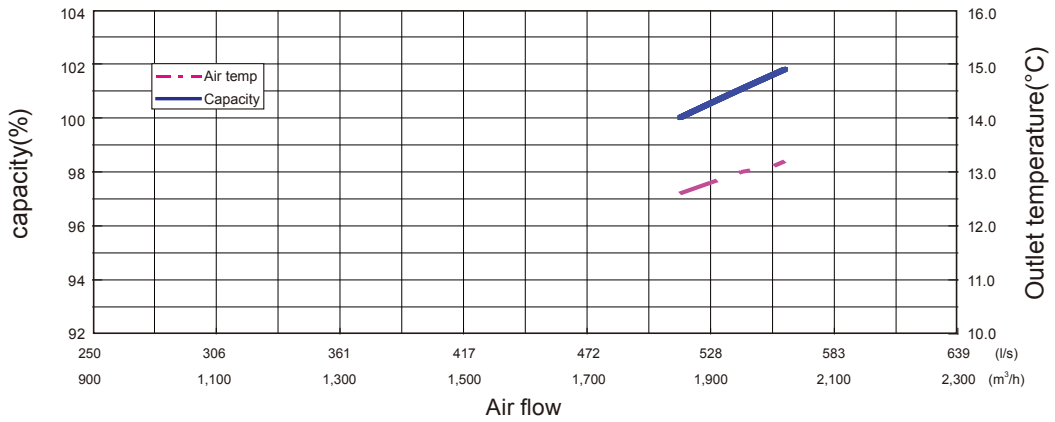

HEATING

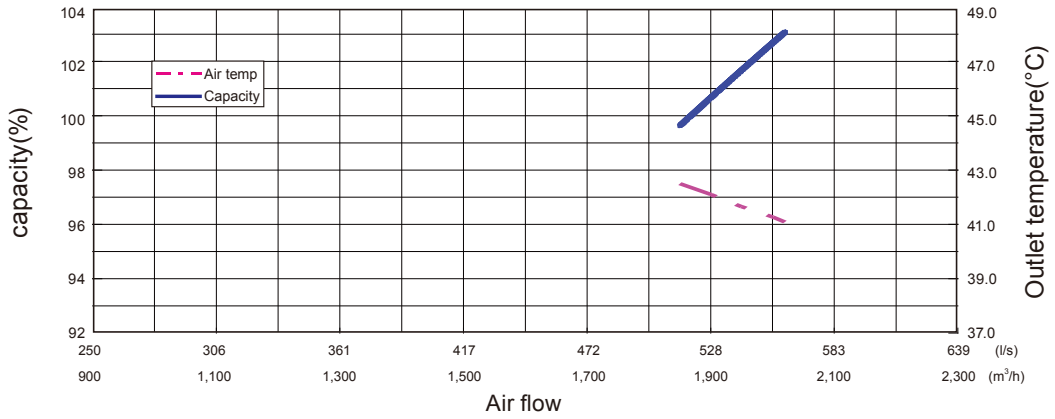

DUCT TYPE
ARTA36-45LA

■ MODEL: ARTA45LA

			Static pressure (Pa)							
			7	10	13	19	21	30	34	57
FAN SPEED	Hi	m^3/h	–	–	–	–	–	2250	2223	2010
		l/s	–	–	–	–	–	625	618	558
		CFM	–	–	–	–	–	1324	1308	1183
	Med	m^3/h	–	–	–	1710	1685	1585	1540	–
		l/s	–	–	–	475	468	440	428	–
		CFM	–	–	–	1006	992	933	906	–
	Low	m^3/h	–	–	1325	1250	1220	–	–	–
		l/s	–	–	368	347	339	–	–	–
		CFM	–	–	780	736	718	–	–	–
	Quiet	m^3/h	1020	995	960	–	–	–	–	–
		l/s	283	276	267	–	–	–	–	–
		CFM	600	586	565	–	–	–	–	–

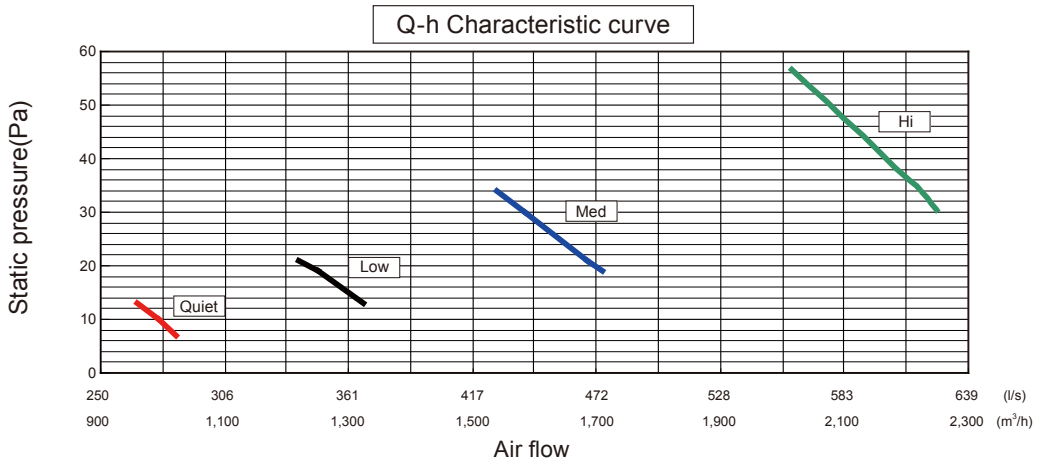

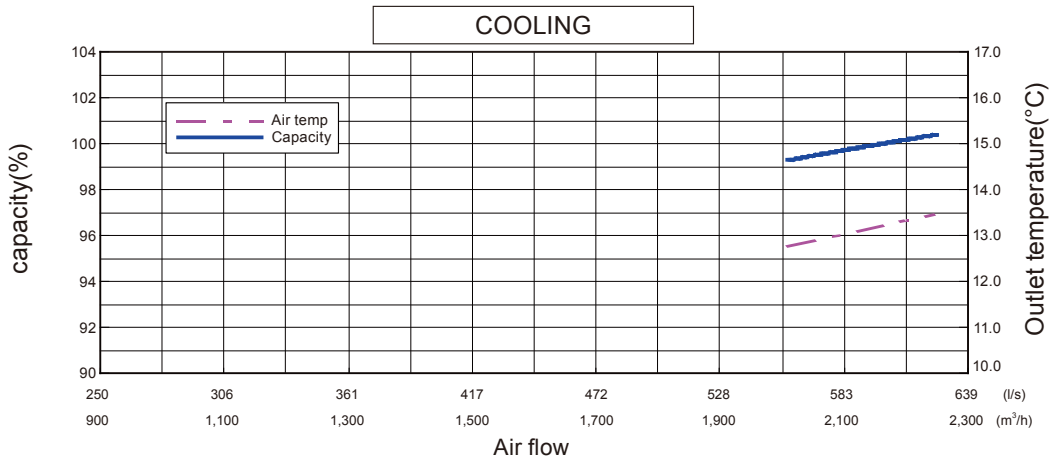

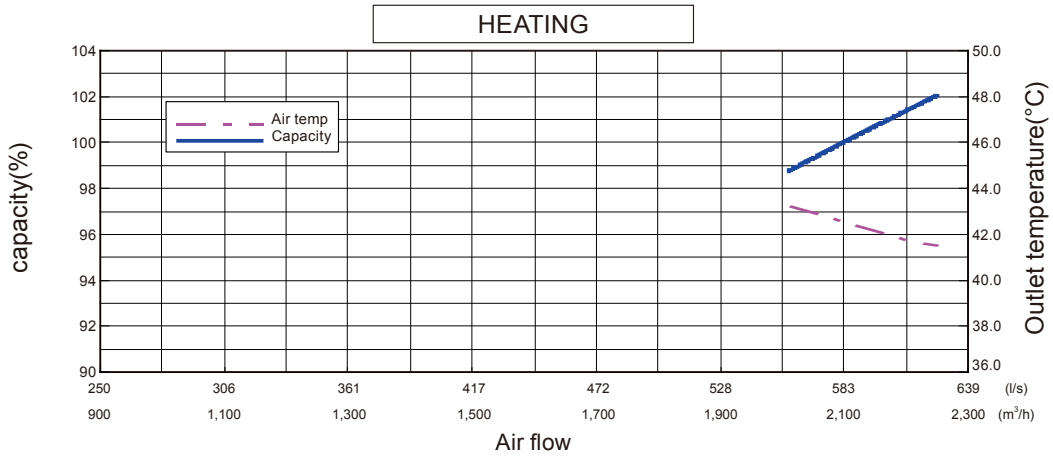

DUCT TYPE
ARTA36-45LA

7-2. HIGH STATIC PRESSURE MODE 1

■ MODEL: ARTA36LA

			Static pressure (Pa)							
			17	26	32	38	45	55	64	80
FAN SPEED	Hi	m^3/h	-	-	-	-	-	1950	1860	1700
		l/s	-	-	-	-	-	542	517	472
		CFM	-	-	-	-	-	1148	1095	1001
	Med	m^3/h	-	-	-	-	1730	1620	1520	-
		l/s	-	-	-	-	481	450	422	-
		CFM	-	-	-	-	1018	953	895	-
	Low	m^3/h	-	1340	1265	1190	-	-	-	-
		l/s	-	372	351	331	-	-	-	-
		CFM	-	789	745	700	-	-	-	-
	Quiet	m^3/h	1080	970	-	-	-	-	-	-
		l/s	300	269	-	-	-	-	-	-
		CFM	636	571	-	-	-	-	-	-

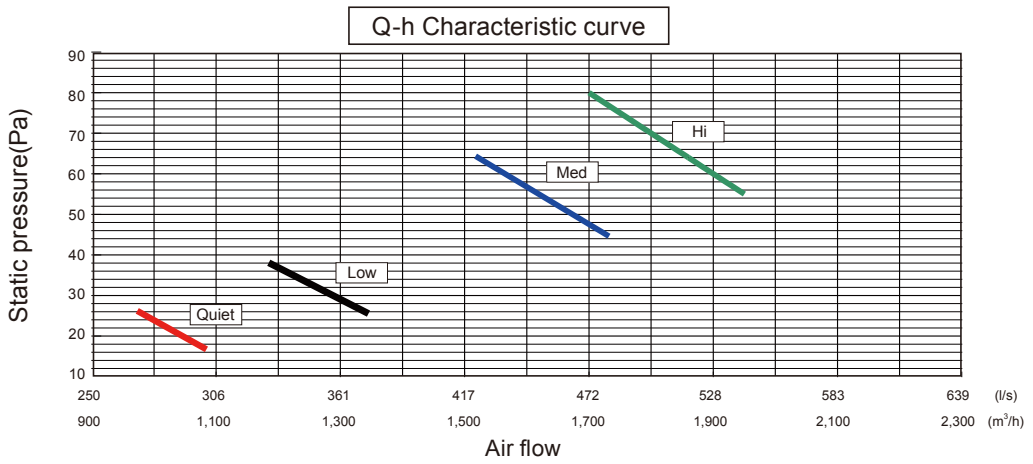

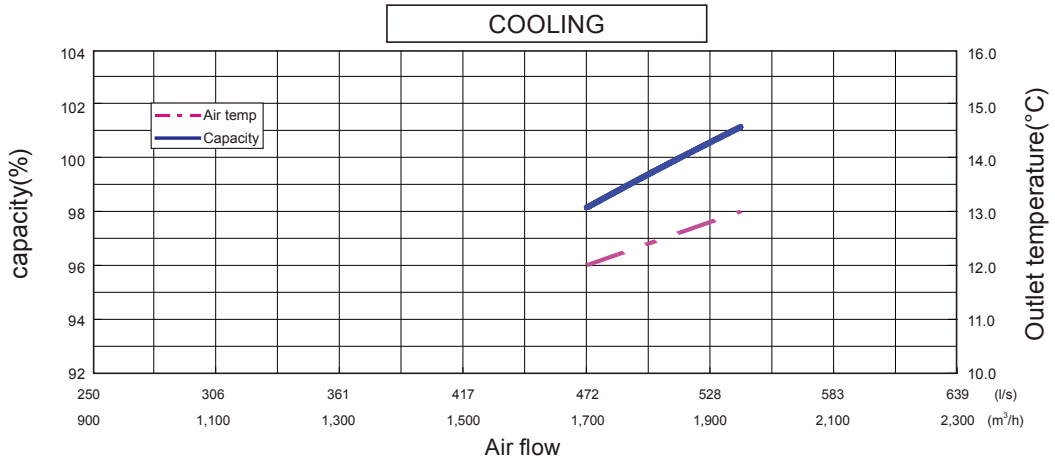

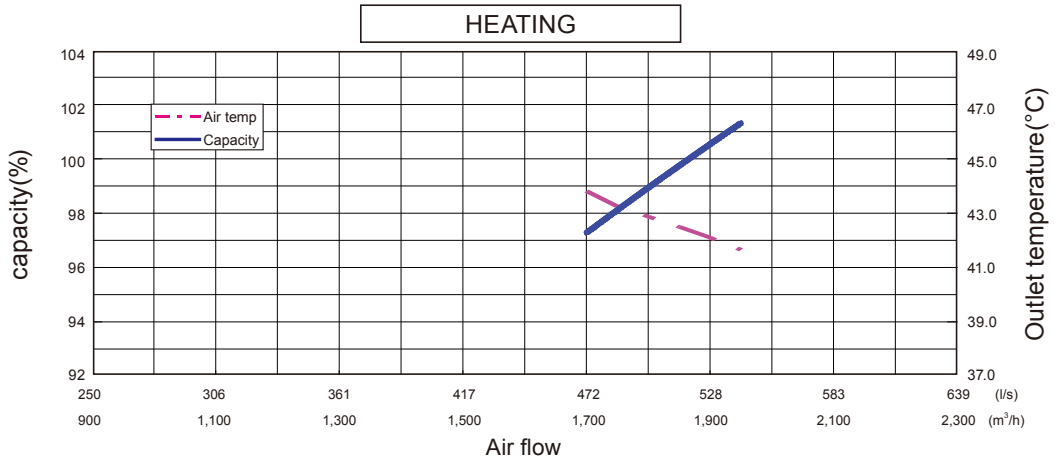

DUCT TYPE
ARTA36-45LA

■ MODEL: ARTA45LA

			Static pressure (Pa)							
			17	26	38	43	60	63	75	90
FAN SPEED	Hi	m^3/h	-	-	-	-	2100	2075	1970	1810
		l/s	-	-	-	-	583	576	547	503
		CFM	-	-	-	-	1236	1221	1159	1065
	Med	m^3/h	-	-	-	1750	1555	1520	-	-
		l/s	-	-	-	486	432	422	-	-
		CFM	-	-	-	1030	915	895	-	-
	Low	m^3/h	-	1350	1190	-		-	-	-
		l/s	-	375	331	-		-	-	-
		CFM	-	795	700	-		-	-	-
	Quiet	m^3/h	1070	970	-	-		-	-	-
		l/s	297	269	-	-		-	-	-
		CFM	630	571	-	-		-	-	-

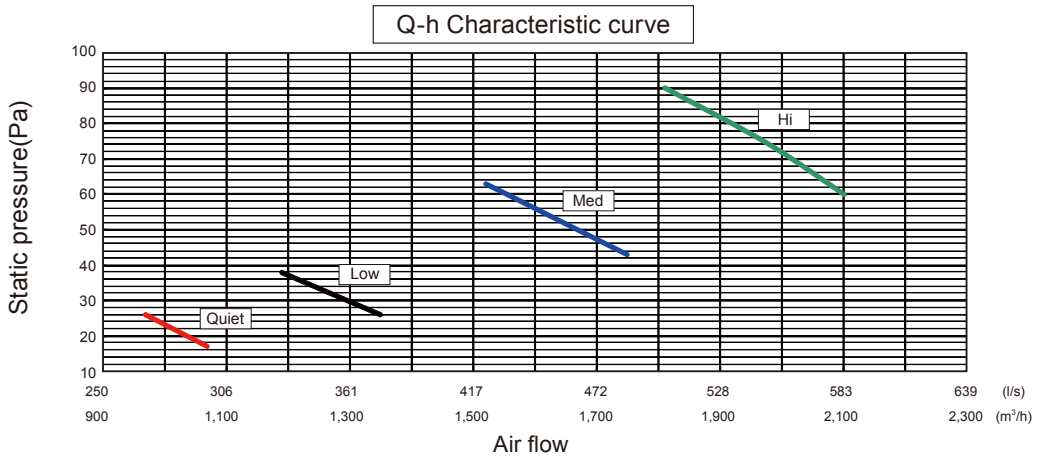

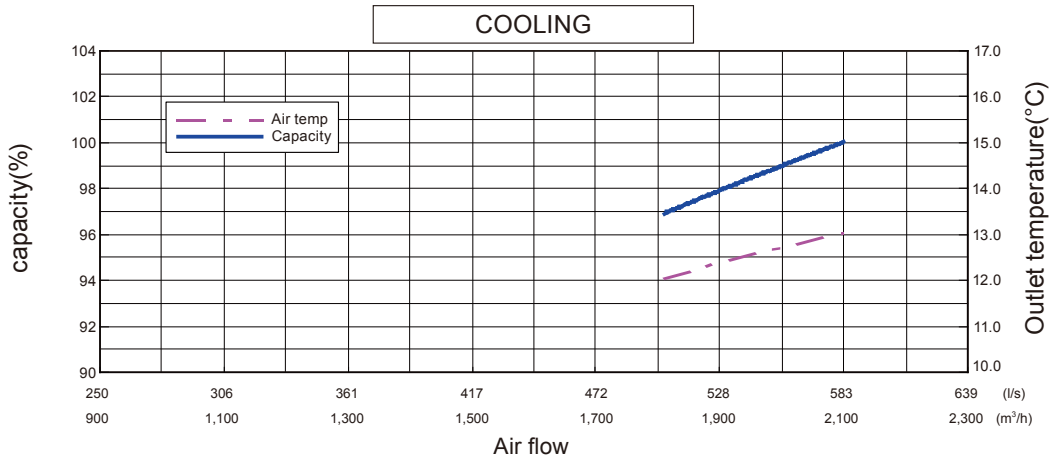

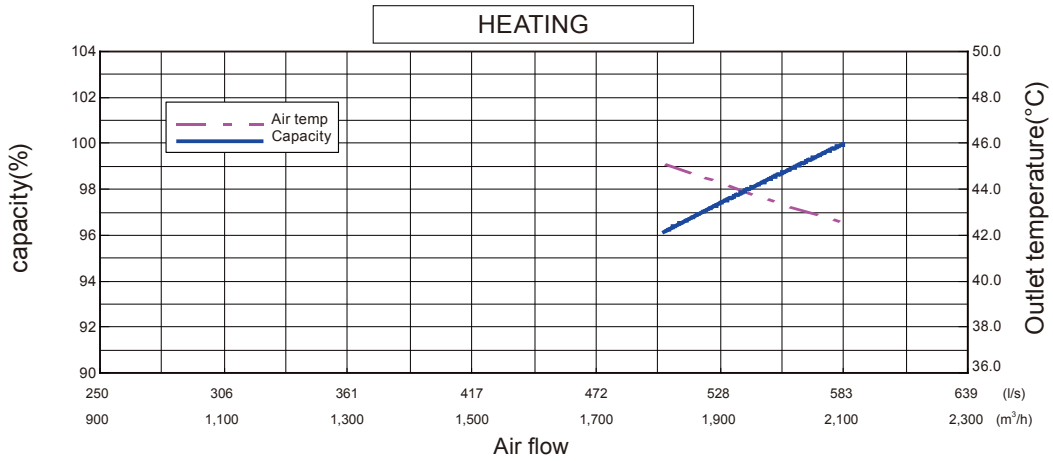

DUCT TYPE
ARTA36-45LA

7-3. HIGH STATIC PRESSURE MODE 2

■ MODEL: ARTA36LA

			Static pressure (Pa)							
			33	40	49	60	70	85	93	112
FAN SPEED	Hi	m^3/h	-	-	-	-	-	-	1850	1600
		l/s	-	-	-	-	-	-	514	444
		CFM	-	-	-	-	-	-	1089	942
	Med	m^3/h	-	-	-	-	1600	1400	-	-
		l/s	-	-	-	-	444	389	-	-
		CFM	-	-	-	-	942	824	-	-
	Low	m^3/h	-	-	1340	1180	-	-	-	-
		l/s	-	-	372	328	-	-	-	-
		CFM	-	-	789	695	-	-	-	-
	Quiet	m^3/h	1090	960	-	-	-	-	-	-
		l/s	303	267	-	-	-	-	-	-
		CFM	642	565	-	-	-	-	-	-

Q-h Characteristic curve

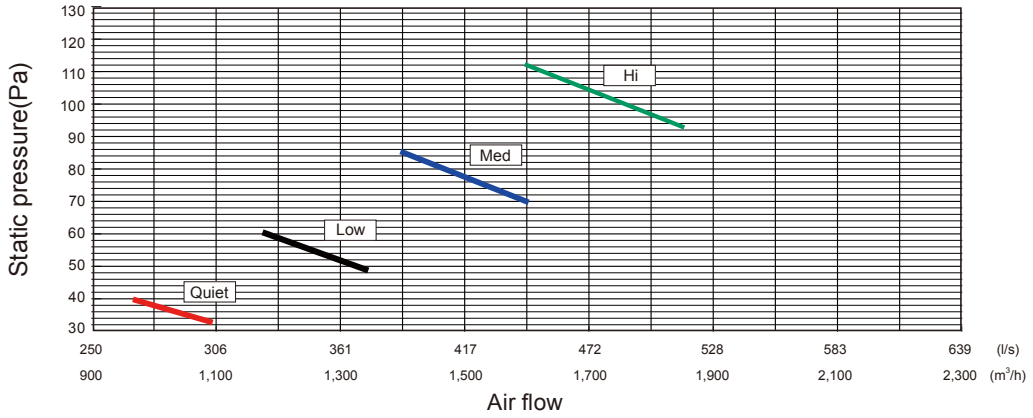

COOLING

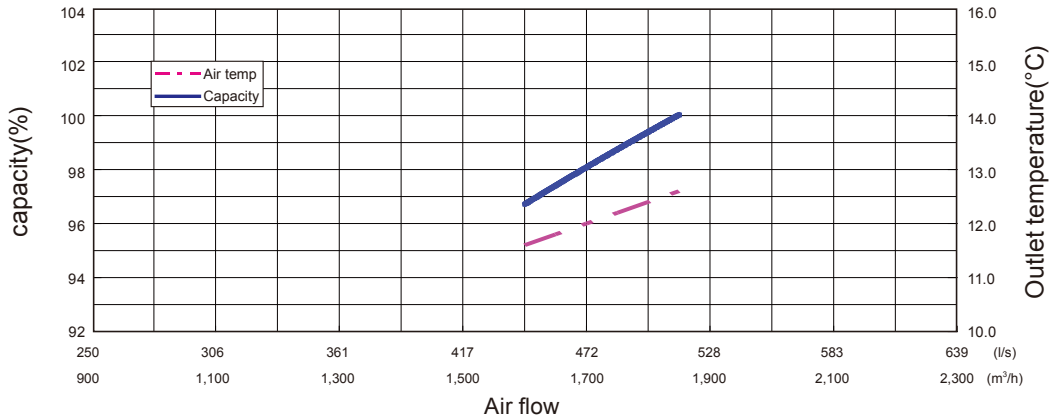

HEATING

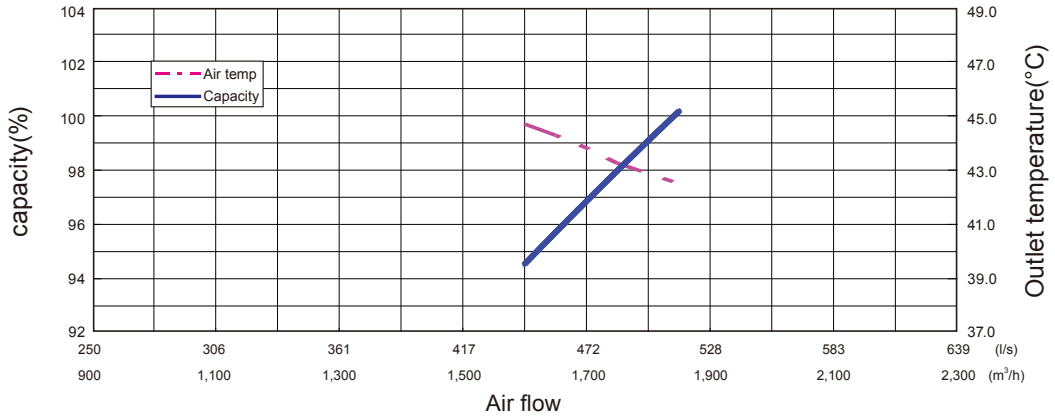

DUCT TYPE
ARTA36-45LA

■ MODEL: ARTA45LA

			Static pressure (Pa)							
			33	40	49	60	70	85	100	120
FAN SPEED	Hi	m^3/h	–	–	–	–	–	–	1900	1660
		l/s	–	–	–	–	–	–	528	461
		CFM	–	–	–	–	–	–	1118	977
	Med	m^3/h	–	–	–	–	1600	1400	–	–
		l/s	–	–	–	–	444	389	–	–
		CFM	–	–	–	–	942	824	–	–
	Low	m^3/h	–	–	1340	1180	–	–	–	–
		l/s	–	–	372	328	–	–	–	–
		CFM	–	–	789	695	–	–	–	–
	Quiet	m^3/h	1090	960	–	–	–	–	–	–
		l/s	303	267	–	–	–	–	–	–
		CFM	642	565	–	–	–	–	–	–

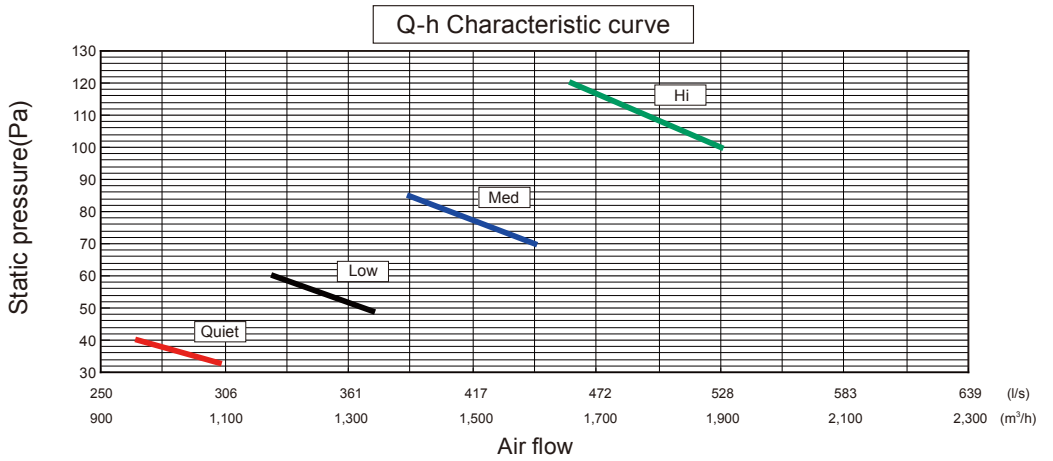

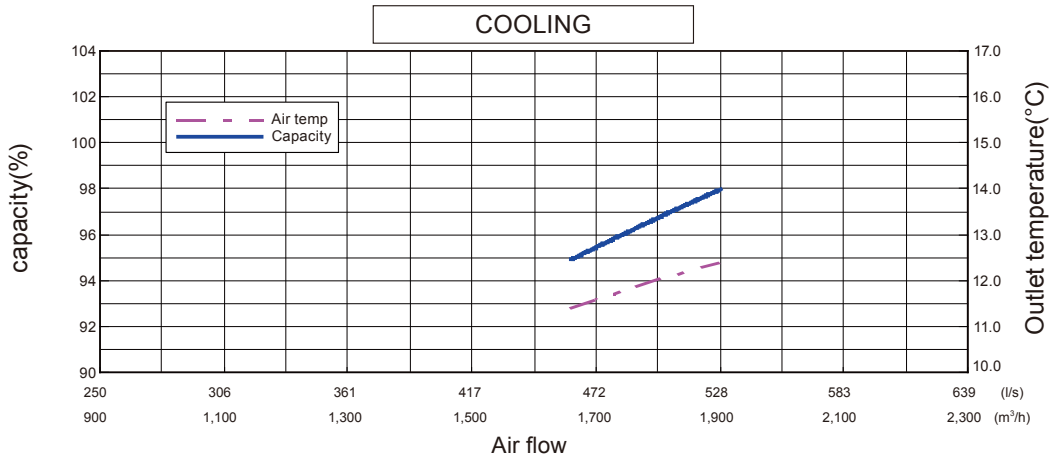

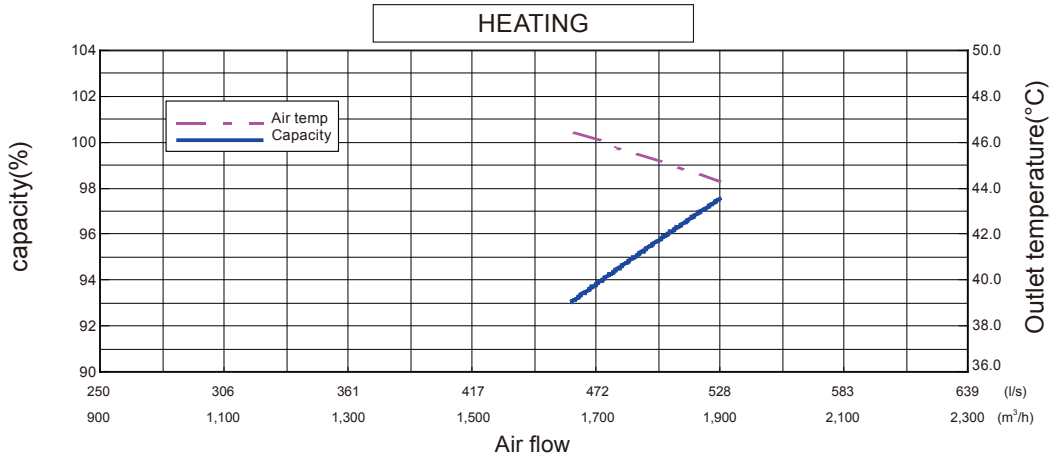

DUCT TYPE
ARTA36-45LA

7-4. HIGH STATIC PRESSURE MODE 3

■ MODEL: ARTA36LA

			Static pressure (Pa)							
			55	63	77	89	102	117	130	150
FAN SPEED	Hi	m^3/h	-	-	-	-	-	-	1730	1500
		l/s	-	-	-	-	-	-	481	417
		CFM	-	-	-	-	-	-	1018	883
	Med	m^3/h	-	-	-	-	1530	1310	-	-
		l/s	-	-	-	-	425	364	-	-
		CFM	-	-	-	-	901	771	-	-
	Low	m^3/h	-	-	1330	1140	-	-	-	-
		l/s	-	-	369	317	-	-	-	-
		CFM	-	-	783	671	-	-	-	-
	Quiet	m^3/h	1110	960	-	-	-	-	-	-
		l/s	308	267	-	-	-	-	-	-
		CFM	653	565	-	-	-	-	-	-

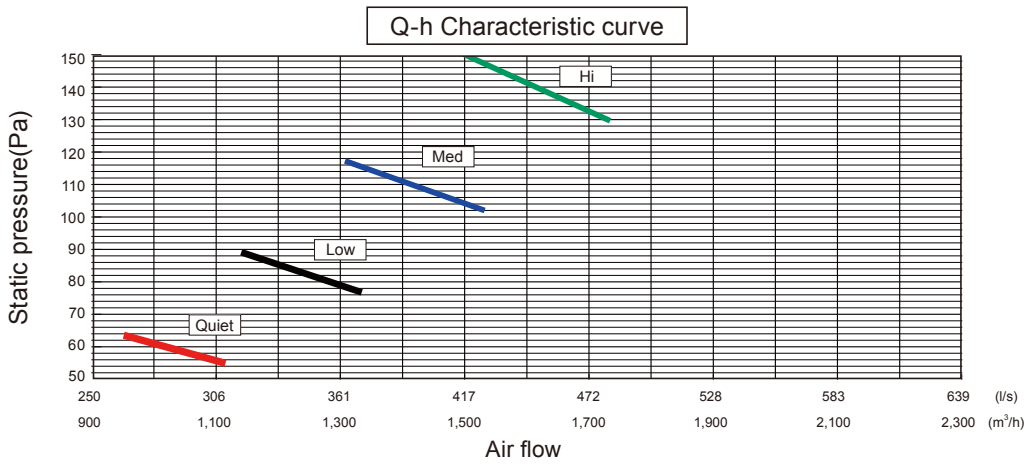

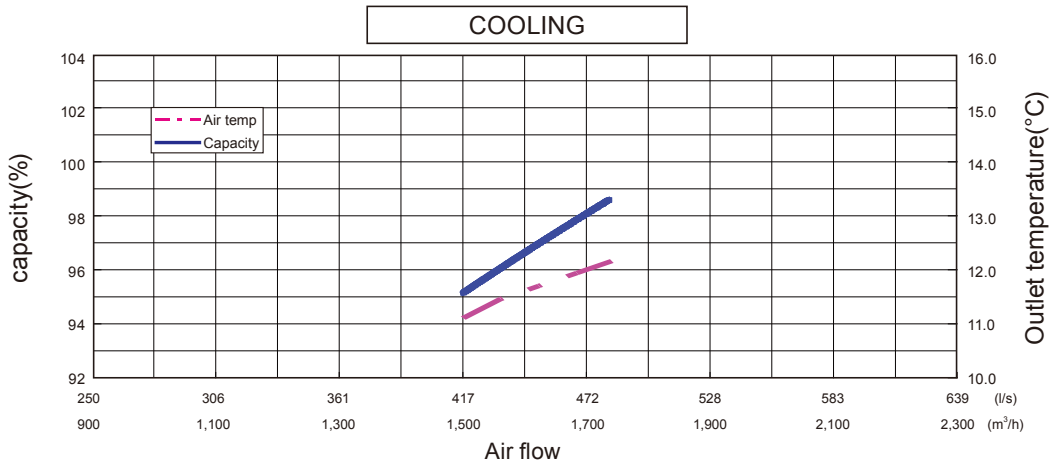

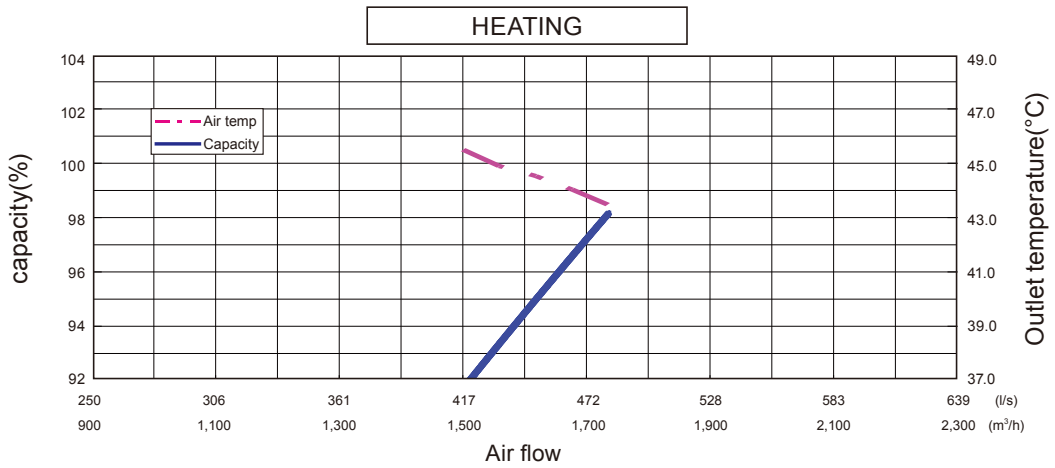

DUCT TYPE
ARTA36-45LA

■ MODEL: ARTA45LA

			Static pressure (Pa)							
			55	63	77	89	102	117	130	150
FAN SPEED	Hi	m^3/h	–	–	–	–	–	–	1730	1500
		l/s	–	–	–	–	–	–	481	417
		CFM	–	–	–	–	–	–	1018	883
	Med	m^3/h	–	–	–	–	1530	1310	–	–
		l/s	–	–	–	–	425	364	–	–
		CFM	–	–	–	–	901	771	–	–
	Low	m^3/h	–	–	1330	1140	–	–	–	–
		l/s	–	–	369	317	–	–	–	–
		CFM	–	–	783	671	–	–	–	–
	Quiet	m^3/h	1110	960	–	–	–	–	–	–
		l/s	308	267	–	–	–	–	–	–
		CFM	653	565	–	–	–	–	–	–

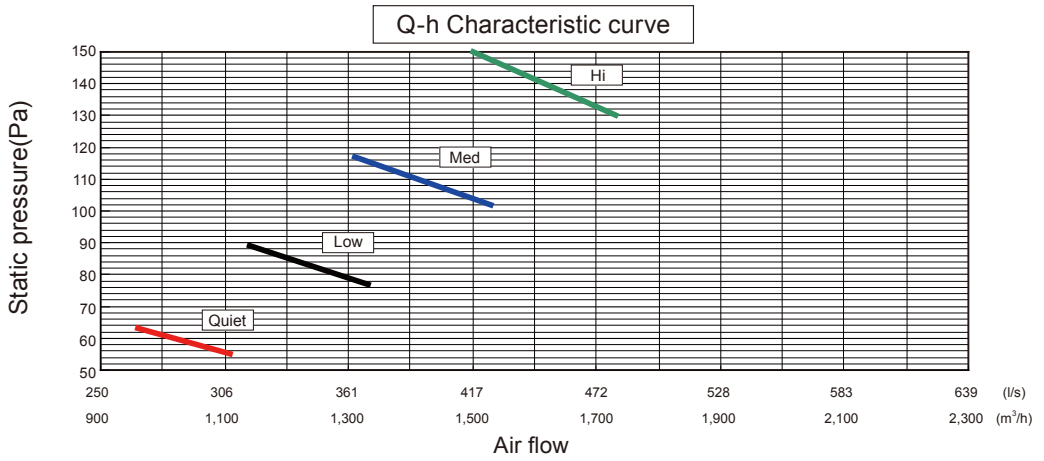

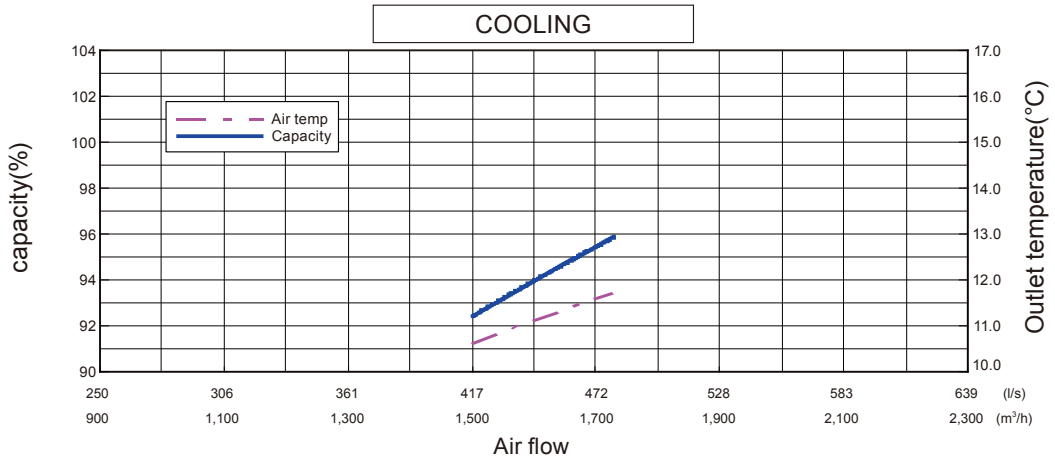

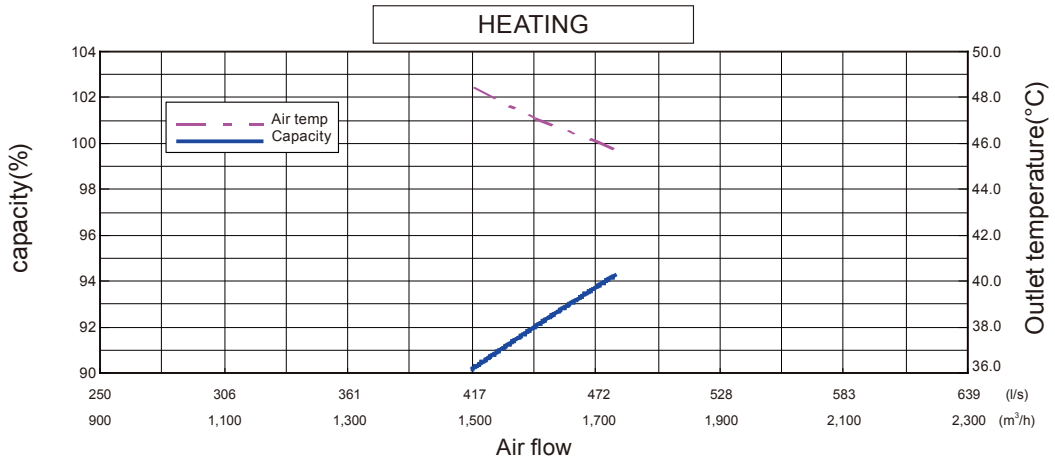

8. OPERATION NOISE

8-1. NOISE LEVEL CURVE

Condition
Static pressure : 47Pa
Static pressure mode : Normal

■ MODEL: ARTA36LA

● Cooling

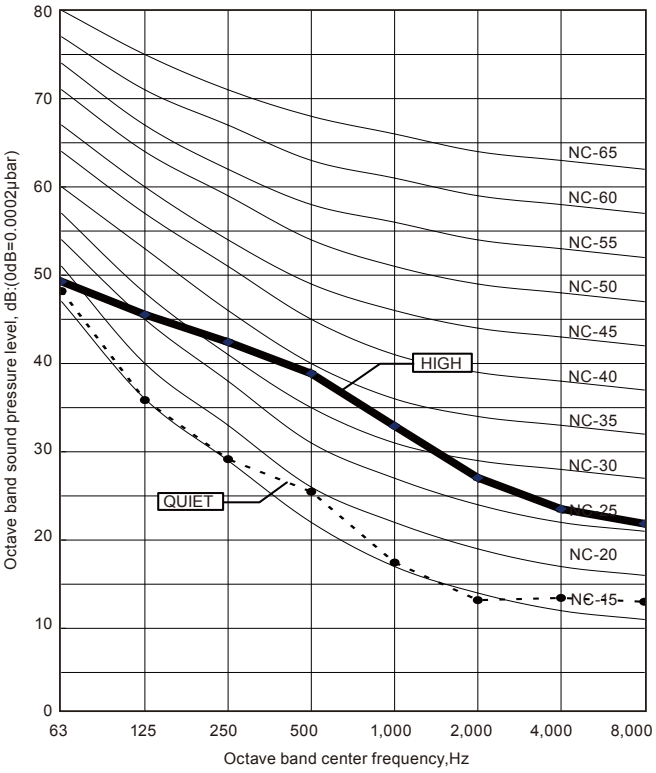

● Heating

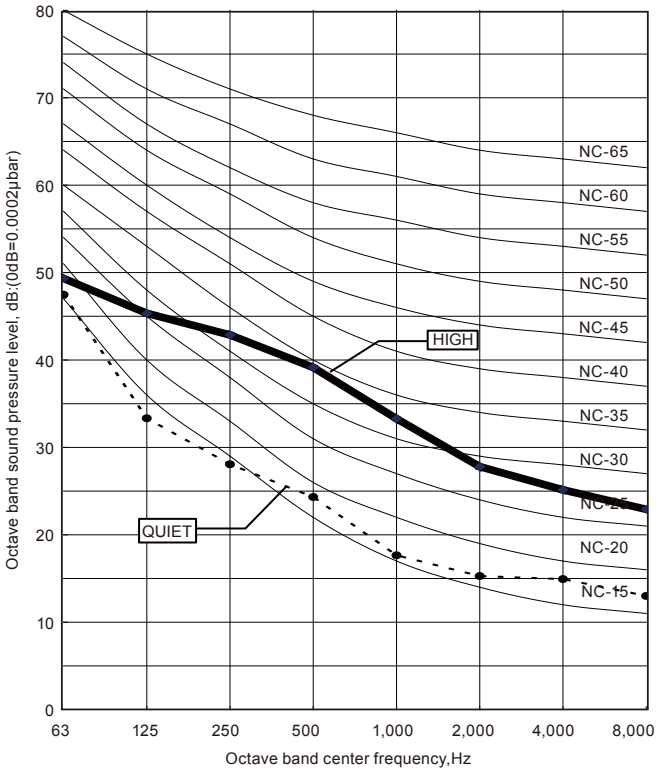

Condition
Static pressure : 60Pa
Static pressure mode : High static pressure mode 1

■ MODEL: ARTA45LA

● Cooling

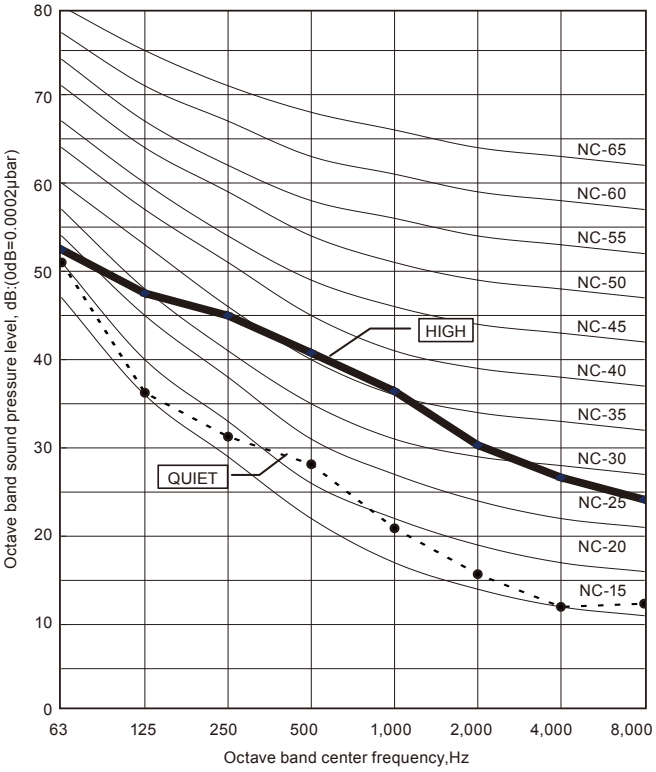

● Heating

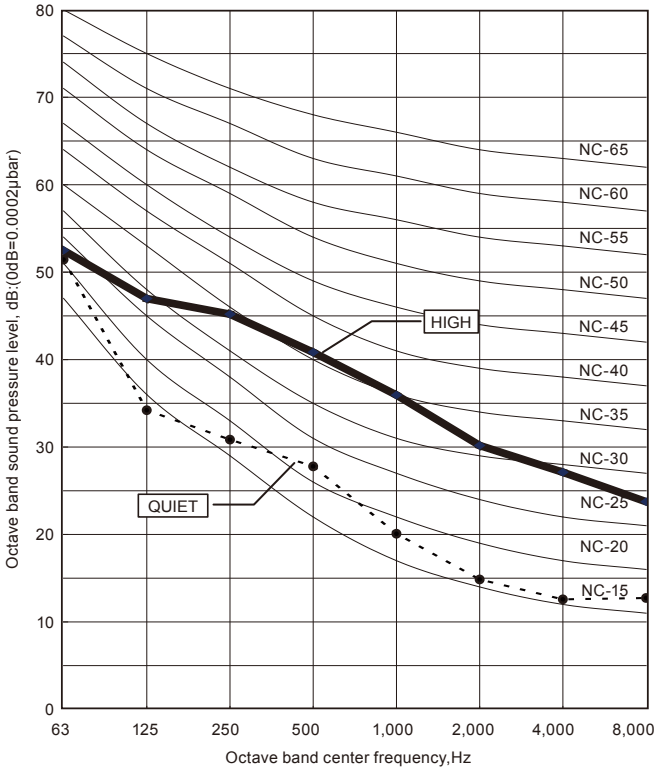

8-2. SOUND LEVEL CHECK POINT

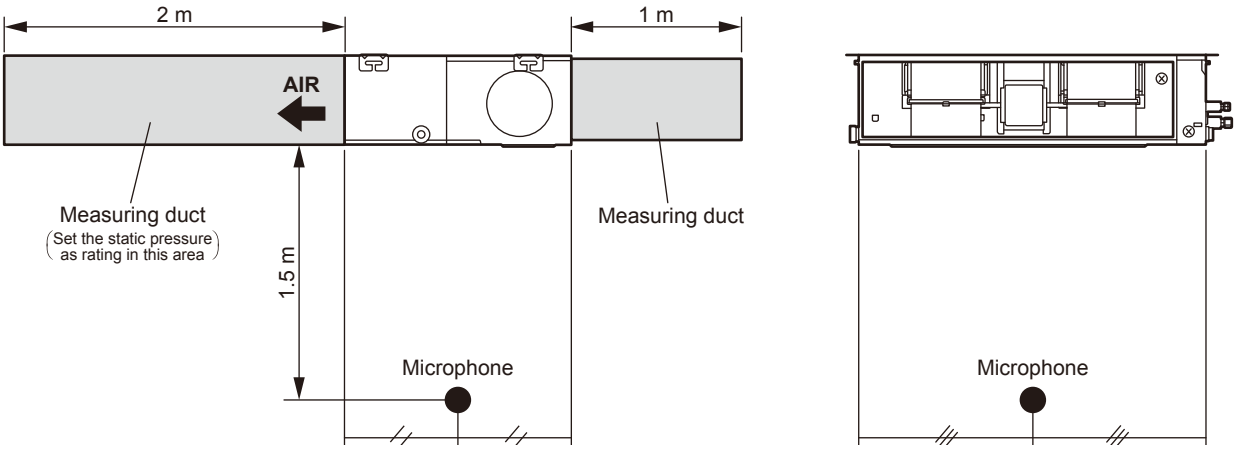

DUCT TYPE
ARTA36-45LA

9. ELECTRIC CHARACTERISTICS

Model name			ARTA36LA	ARTA45LA
Power supply	Voltage	V	240 ~	
	Frequency	Hz	50	
Max. operating current (Indoor unit)		A	2.1	
Wiring spec. (Indoor unit to outdoor unit)	Connection cable	mm^2	1.5	
	Limited wiring length	m	50	

DUCT TYPE
ARTA36-45LA

10. SAFETY DEVICES

	Protection form	Model	
		ARTA36LA	ARTA45LA
Circuit protection	Current fuse (PCB)	3.15A 250V	
Fan motor protection	Over current protection	1.90±0.24A	
	Thermal protection program	115±15°C OFF 70°C ON	

DUCT TYPE
ARTA36-45LA

11. EXTERNAL INPUT & OUTPUT

Connector	INPUT	OUTPUT	REMARKS
CN102	Control input (Operation/Stop)	—	See external input/output settings for details.
CN103	—	Operation status output	
CN6	—	Fresh air control output	
CN10	—	Auxiliary heater output	

11-1. EXTERNAL INPUT

■ CONTROL INPUT (Operation/Stop)

The air conditioner can be remotely operated by means of the following on-site work.

Unit operation is started at the following contents by adding the contact input of a commercial ON/OFF switch to a connector on the external control PC board and turning it ON.

Unit operation	Initial starting after turned power on	Other than initial starting
Operation mode	Auto changeover	Mode at previous operation
Set temperature	24°C	Temperature at previous operation
Air flow mode	AUTO	Mode at previous operation

● Circuit diagram example

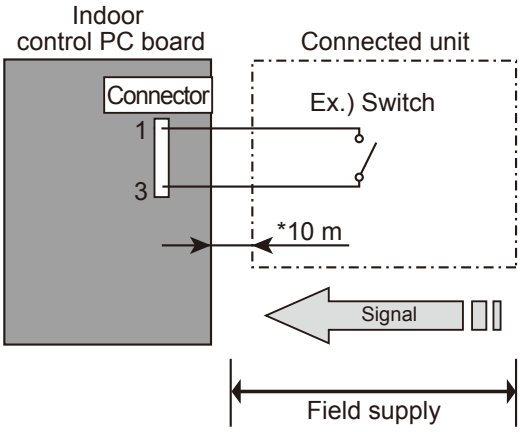

* Make the distance from the PC board to the connected unit within 10m.
Contact capacity : 12VDC or more, 15mA or more.
Please use the non-polar relays and switches.

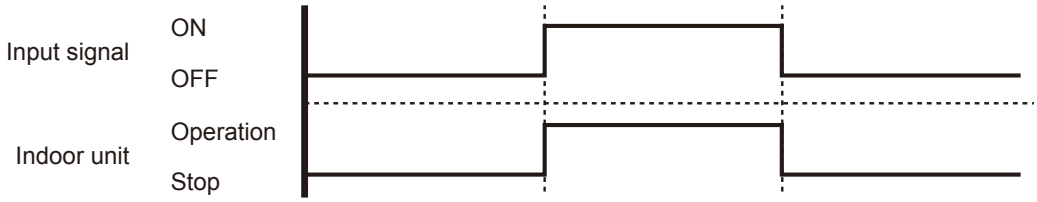

● Parts (Optional)

Model name
UTD-ECS5A

Wire (External input)

DUCT TYPE
ARTA36-45LA

11-2. EXTERNAL OUTPUT

■ OPERATION STATUS OUTPUT

An air conditioner operation status signal can be output.

● Circuit diagram example

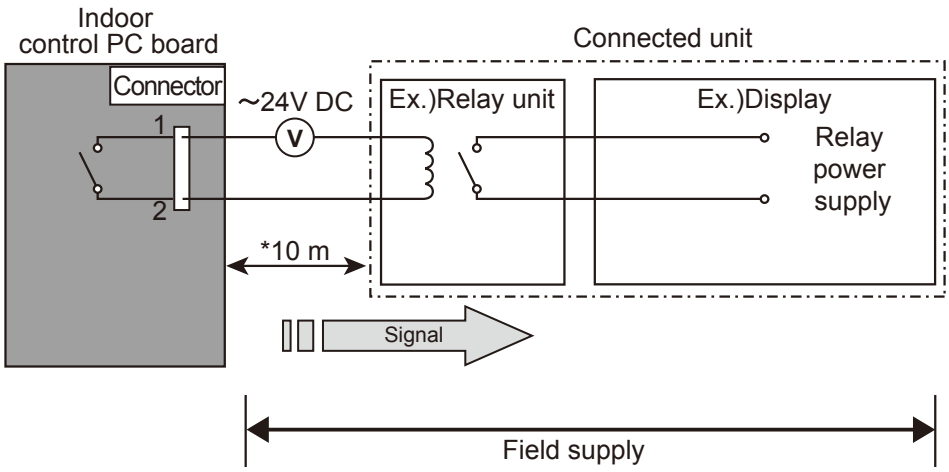

* Make the distance from the PC board to the connected unit within 10m.
Relay spec. : Max.24VDC, 10mA to less than 500mA.

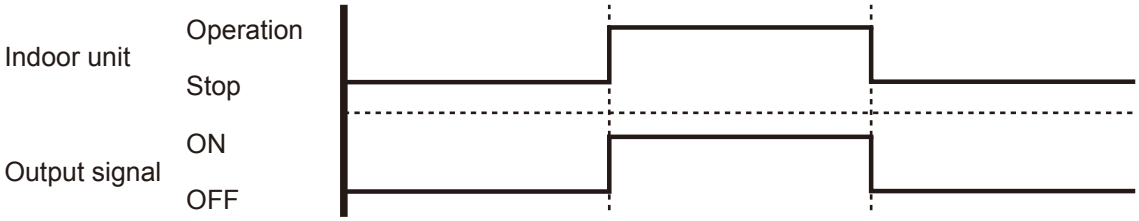

● Parts (Optional)

Model name
UTD-ECS5A

Wire (External output)

DUCT TYPE
ARTA36-45LA

■ FRESH AIR CONTROL OUTPUT

A signal linked to air conditioner indoor fan ON can be output.

* However, signal becomes OFF during cold air prevention control operation.

● Circuit diagram example

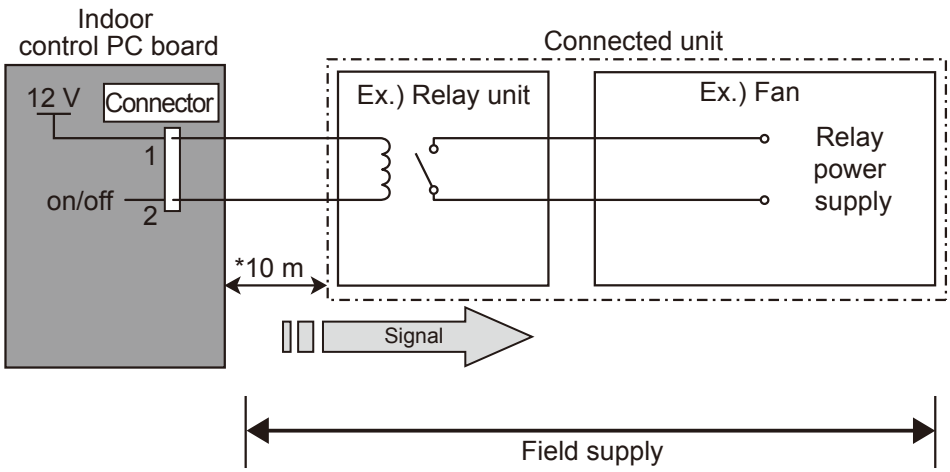

* Make the distance from the PC board to the connected unit within 10m.
Relay spec. : Rated 12VDC, 50mA or less.

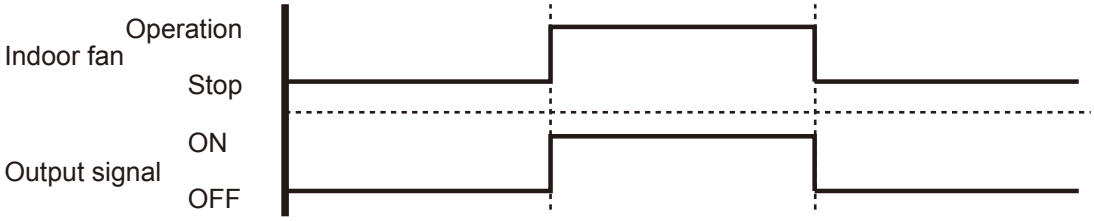

● Parts (Optional)

Model name
UTD-ECS5A

Wire (Fresh air output)

DUCT TYPE
ARTA36-45LA

■ AUXILIARY HEATER OUTPUT

A signal is outputed from Connector when indoor fan and compressor turn on under heating operation.

*Signal output performance specifications are as shown on the right

Ex. When Set Temperature(Ts) is 22°C

- and Room Temperature(Tr) increase above 12°C, signal output is on.
- and Room Temperature(Tr) increase above 21°C, signal output is off.
- and Room Temperature(Tr) decrease below 19°C, signal output is on.
- and Room Temperature(Tr) decrease below 10°C, signal output is off.

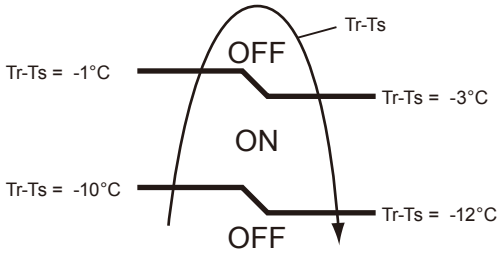

● Jumper wire (Indoor Unit)

This is used to continue indoor unit fan operation for 1 minute after thermo OFF in heating mode.
1 minute delay control set by cutting jumper wire on PCB.

● Circuit diagram example

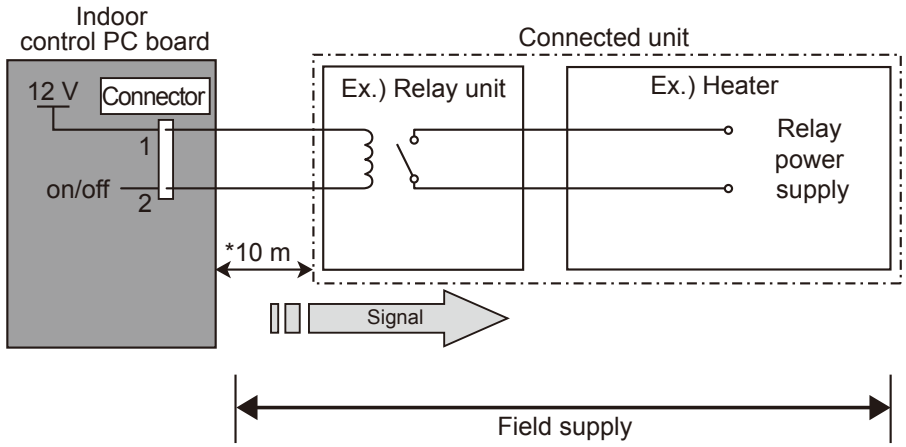

* Make the distance from the PC board to the connected unit within 10m.
Relay spec. : Rated 12VDC, 50mA or less.

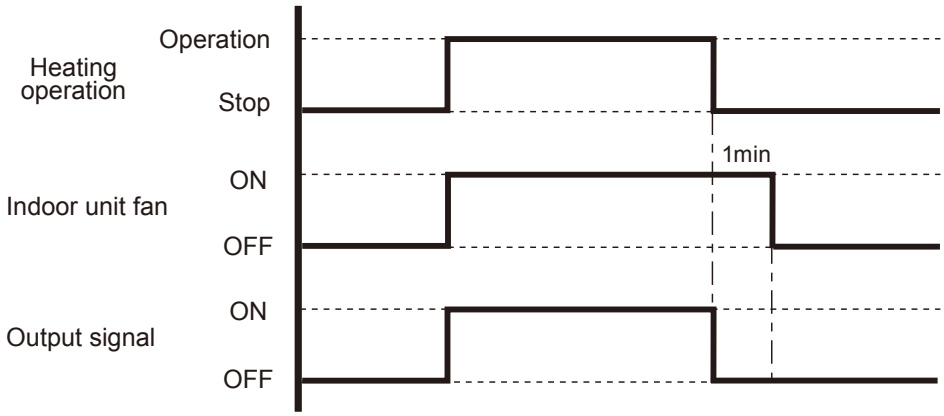

CAUTION

Please locate a external heater between the indoor unit and the outlet.

Please be sure to use delay control of a fan.

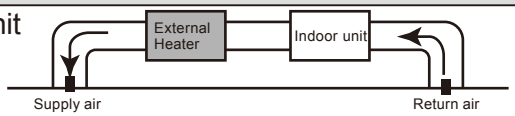

● Parts (Optional)

Model name
UTD-ECS5A

Wire (Heater output)

12. FUNCTION SETTING

12-1. INDOOR UNIT

INDOOR UNIT		
DIP SW	1	Remote controller address setting
	2	
	3	
	4	
Jumper Wire	JM1	Remote controller custom code
	JM2	
	JM3	Fan delay setting

■ SWITCH POSITION

MAIN PCB

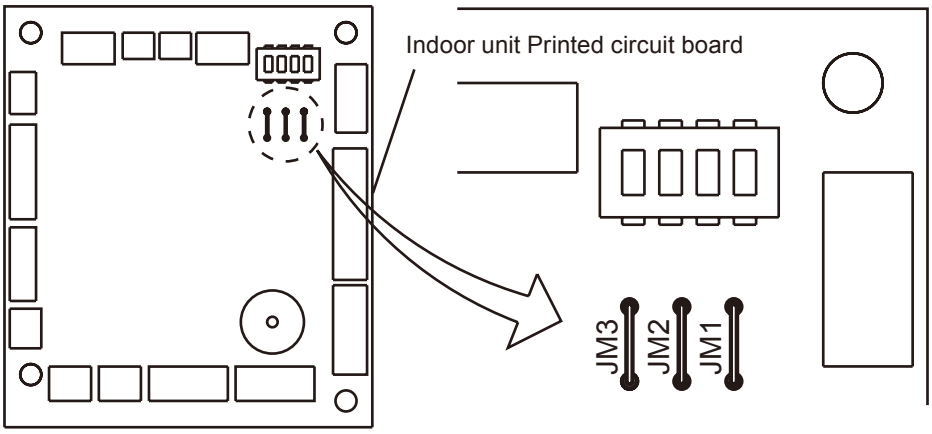

■ DIP-SW SETTING

● Remote controller address setting

A number of indoor units can be operated at the same time using a wired remote controller.
Set the unit number of each indoor unit using the DIP switches on the indoor unit circuit board.
(See the following table.)
The DIP switches are normally set to make the unit number 00.

(◆. . .Factory setting)

Remote controller address	DIP switch No.			
	1	2	3	4
◆ 00	OFF	OFF	OFF	OFF
01	ON	OFF	OFF	OFF
02	OFF	ON	OFF	OFF
03	ON	ON	OFF	OFF
04	OFF	OFF	ON	OFF
05	ON	OFF	ON	OFF
06	OFF	ON	ON	OFF
07	ON	ON	ON	OFF
08	OFF	OFF	OFF	ON
09	ON	OFF	OFF	ON
10	OFF	ON	OFF	ON
11	ON	ON	OFF	ON
12	OFF	OFF	ON	ON
13	ON	OFF	ON	ON
14	OFF	ON	ON	ON
15	ON	ON	ON	ON

DUCT TYPE
ARTA36-45LA

■ JUMPER WIRE SETTING

● Remote controller custom code (JM1, JM2)

(◆··· Factory setting)

Jumper wire		Remote controller custom code
JM 1	JM 2	
Connect	Connect	A ◆
Disconnect	Connect	B
Connect	Disconnect	C
Disconnect	Disconnect	D

● Fan delay setting (JM3)

When the indoor unit is stopped while operating in conjunction with auxiliary heater, the indoor unit fan operation will continue for one minute.

(◆. . .Factory setting)

	JM 3	JM state
◆	Connect	Invalid
	Disconnect	Valid

DUCT TYPE
ARTA36-45LA

12-2. INDOOR UNIT (Setting by remote controller)

- The function settings of the control of the indoor unit can be changed by this procedure according to the installation conditions. Incorrect settings can cause the indoor unit malfunction.
- After the power is turned on, perform the “FUNCTION SETTING” according to the installation conditions using the remote controller.
- The settings may be selected between the following two: Function Number or Setting Value.
- Settings will not be changed if invalid numbers or setting values are selected.

■ PREPARATION

- Turn on the power.

  * By turning on the power indoor units, so make sure the piping air-tight test and vacuuming have been conducted before turning on the power.

  * Also check again to make sure no wiring mistakes were made before turning on the power.

■ FUNCTION SETTING METHOD (for Wired remote controller)

● Setting method

(1) Press the set temperature buttons (∨) (∧) and fan control button simultaneously for more than 5 seconds to enter the function setting mode.

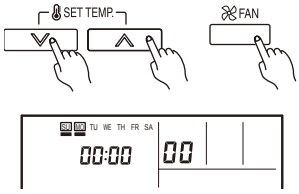

(2) Press the SET BACK button to select the indoor unit number.

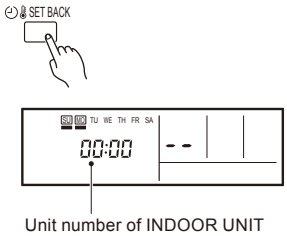

3) Press the set time buttons to select the function number.

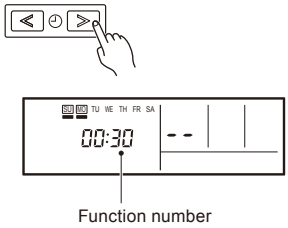

(4) Press the set temperature buttons (∨) (∧) to select the setting value. The display flashes as shown to the right during setting value selection.

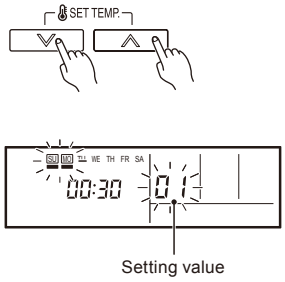

DUCT TYPE
ARTA36-45LA

(5) Press the TIMER SET button to confirm the setting. Press the TIMER SET button for a few seconds until the setting value stops flashing. If the setting value display changes or if "- -" is displayed when the flashing stops, the setting value has not been set correctly. (An invalid setting value may have been selected for the indoor unit.)

(6) Repeat steps 2 to 5 to perform additional settings. Press the set temperature buttons (∨) (∧) and fan control button simultaneously again for more than 5 seconds to cancel the function setting mode. In addition, the function setting mode will be automatically canceled after 1 minute if no operation is performed.

(7) After completing the FUNCTION SETTING, be sure to turn off the power and turn it on again.

⚠CAUTION
• After turning off the power, wait 30 seconds or more before turning on it again. The FUNCTION SETTING doesn't become effective if it doesn't do so.

■ CONTENTS OF FUNCTION SETTING

1. Static pressure

• Select the appropriate static pressure according to the installation conditions.

(◆. . . Factory setting)

	Setting Description	Function Number	Setting Value
◆	Normal	21	00
	High static pressure 1		01
	High static pressure 2		02
	High static pressure 3		03

2. Room temperature control for cooling

• Depending on the installed environment, correction of the room temperature sensor may be required.

Select the appropriate control setting according to the installed environment.

(◆. . . Factory setting)

	Setting Description	Function Number	Setting Value
◆	Standard	30	00
	Slightly lower control		01
	Lower control		02
	Higher control		03

3. Room temperature control for heating

• Depending on the installed environment, correction of the room temperature sensor may be required.

Select the appropriate control setting according to the installed environment.

(◆. . . Factory setting)

	Setting Description	Function Numbe	Setting Value
◆	Standard	31	00
	Lower control		01
	Slightly higher control		02
	Higher control		03

DUCT TYPE
ARTA36-45LA

4. Auto Restart

•Enable or disable automatic restart after a power interruption.

（◆. . . Factory setting）

	Setting Description	Function Number	Setting Value
◆	Enable	40	00
	Disable		01

*Auto restart is an emergency function such as for power outage etc.

Do not attempt to use this function in normal operation.

Be sure to operate the unit by remote controller or external device.

5. Room temperature sensor switching

•(Only for wired remote controller)

When using the Wired remote controller temperature sensor, change the setting to "Both" (01).

（◆. . . Factory setting）

	Setting Description	Function Number	Setting Value
◆	Indoor unit	42	00
	Both		01

00: Sensor on the indoor unit is active.

01: Sensors on both indoor unit and wired remote controller are active.

*Remote controller sensor must be turned on by using the remote controller.

6. Room temperature sensor switching (Aux.)

•To use the temperature sensor on the wired remote controller only, change the setting to "Wired remote controller" (01). This function will only work if the function setting 42 is set at "Both" (01)

（◆. . . Factory setting）

	Setting Description	Function Number	Setting Value
◆	Bothl	48	00
	Wired remote controller		01

DUCT TYPE
ARTA36-45LA

12-3. WIRED REMOTE CONTROLLER

DIP SW	1	Can not be used. (Do not change)
	2	Dual remote controller setting
	3	Can not be used. (Do not change)
	4	Can not be used. (Do not change)
	5	Can not be used. (Do not change)
	6	Memory backup setting

■ SWITCH POSITION

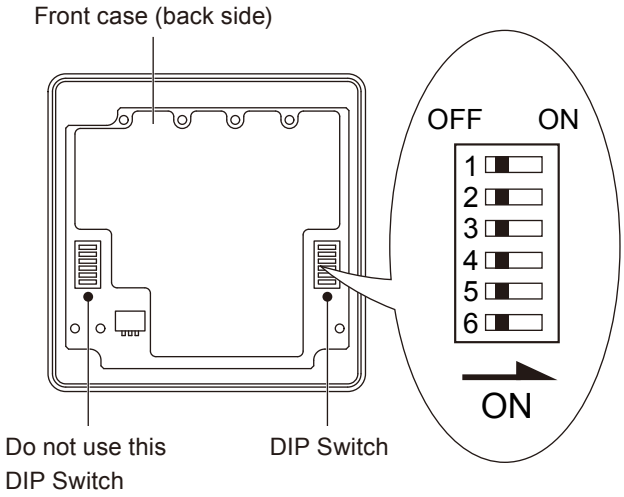

■ DIP SWITCH SETTING

1. Dual remote controller setting

Set the remote controller DIP switch No.2 according to the following table.

(◆··· Factory setting)

	Number of remote controller	Master unit	Slave unit
		DIP-SW No.2	DIP-SW No.2
◆	1 (Normal)	OFF	—
	2 (Dual)	OFF	ON

2. Memory backup setting

Set to ON to use batteries for the memory backup. If batteries are not used, all of the settings stored in memory will be deleted if there is a power failure.

(◆··· Factory setting)

	DIP-SW No.6	Memory backup
◆	OFF	Invalidity
	ON	Validity

13. OPTIONAL PARTS

13-1. CONTROLLER

Exterior	Parts name	Model No.	Summary
	Wired remote controller	UTB-TUD	Unit control is performed by **wired remote controller**. Wired remote controller is attached in one as accessories. Wired remote controller is two installation possibility in one indoor unit.
	IR Receiver Unit	UTY-LRHYM	Unit control is performed by wireless remote controller.

DUCT TYPE
ARTA36-45LA

13-2. OTHERS

Exterior	Parts name	Model No.	Summary
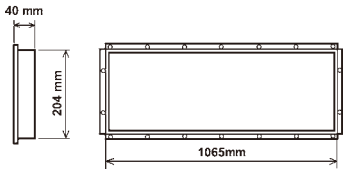	Square flange	UTD-SF045T	Both the **Square flange** and the **Round flange** can be selected. **Round flange** is also used when the fresh air duct is installed
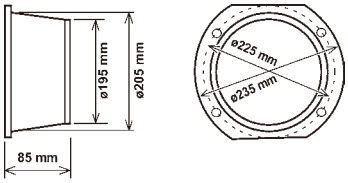	Round flange	UTD-RF204	
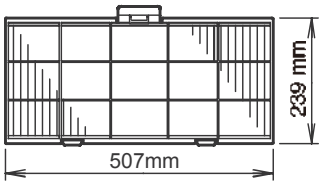	Long-life filter	UTD-LF25NA	**Long-life filter** can be mounted to the indoor unit.
	Remote sensor	UTD-RS100	New amenity space can be offered by installing the **Remote sensor** in the remote controller.
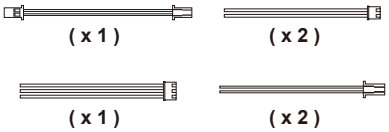	External control set	UTD-ECS5A	Use to connect with various peripheral devices and air conditioner PC board. (Set of 6)
	Drain Pump Unit	UTZ - PX1NBA	Optional drain lift up mechanism allows more flexible installation.

2. OUTDOOR UNIT

SINGLE TYPE :

AOTA36LCTL
AOTA45LCTL

DTR_AO095E_02
2014.05.16

CONTENTS

2. OUTDOOR UNIT

OUTDOOR UNIT
AOTA36-45LC

1. SPECIFICATIONS

Type				INVERTER HEATPUMP	
Model name				AOTA36LCTL	AOTA45LCTL
Power source				240 V~ 50 Hz	
Available voltage range				198 - 264 V	
Starting current			A	13.0	17.2
Fan	Airflow rate	Cooling	l/s (m^3/h)	1,722 (6,200)	1,875 (6,750)
		Heating		1,722 (6,200)	1,722 (6,200)
	Type × Q'ty			Propeller × 2	
	Motor output		W	104	104
Sound pressure level		Cooling	dB(A)	54	55
		Heating		54	55
Sound power level				68	69
Heat exchanger type		Dimensions (H × W × D)	mm	1260 × 900 × 36.4	
		Fin pitch		1.30	
		Rows x Stages		2 × 60	
		Pipe type		Copper	
		Fin type: Type(Material)		Corrugate (Aluminium)	
		Fin type: Surface treatment		Corrosion resistance (Blue fin)	
Compressor	Type × Q'ty			Twin Rotary × 1	
	Motor output		W	2100	
Refrigerant		Type		R410A	
		Charge	g	3350	
Refrigerant oil		Type		RB68	
Enclosure		Material		Steel sheet	
		Colour		BEIGE (Approximate colour of MUNSELL 10YR7.5 / 1.0)	
Dimensions (H×W×D)	Net		mm	1290 × 900 × 330	
	Gross			1430 × 1050 × 445	
Weight	Net		kg	86	
	Gross			94	
Connection pipe	Size	Liquid	mm	Ø 9.52 (Ø 3/8 in.)	
		Gas		Ø 15.88 (Ø 5/8 in.)	
	Method			Flare	
	Pre-charge length		m	20	
	Max. length			50	
	Max. height difference			30	
Operation range		Cooling	°C	-15 to 46	
		Heating		-15 to 24	
International protection rating				IPX4	

Note :
Specifications are based on the following conditions.
Cooling : Indoor temperature of 27 °CDB / 19 °CWB.and outdoor temperature of 35 °CDB/24 °CWB.
Heating : Indoor temperature of 20 °CDB / 15 °CWB.and outdoor temperature of 7 °CDB/6 °CWB.
Pipe length : 7.5 m, Height difference : 0 m.(Outdoor unit - Indoor unit)
The protective function might work when using it outside the temperature range mentioned above.

OUTDOOR UNIT
AOTA36-45LC

2. DIMENSIONS

■ MODEL: AOTA36LC, AOTA45LC

(Unit : mm)

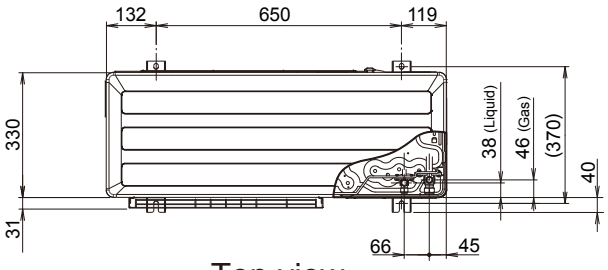

Top view

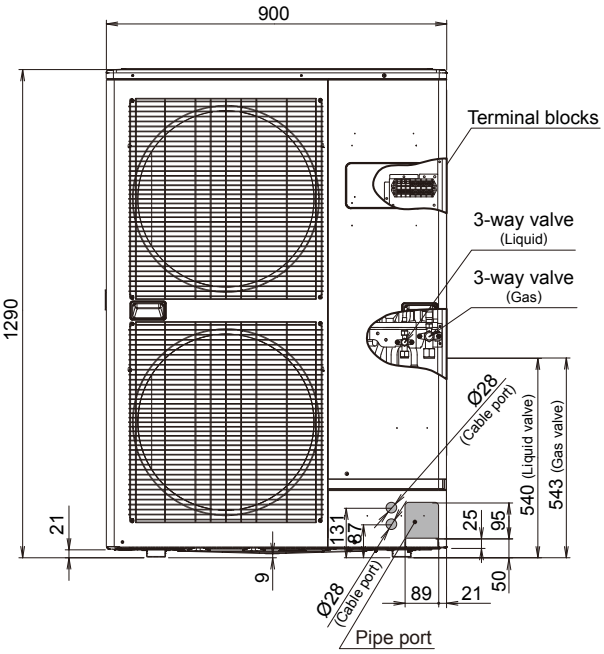

Front view

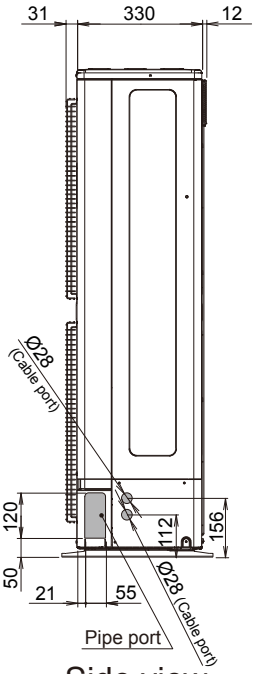

Side view

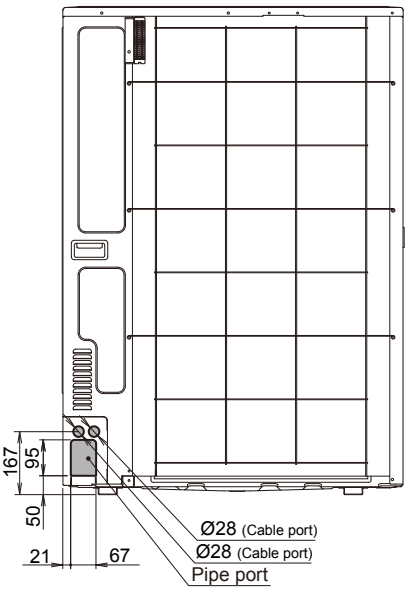

Rear view

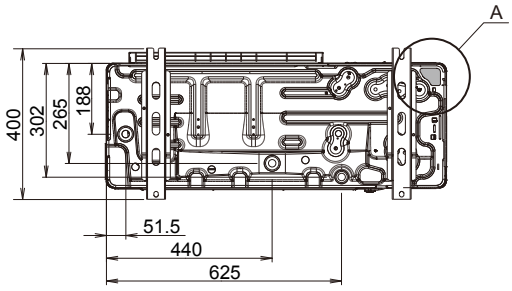

Bottom view

Detail A

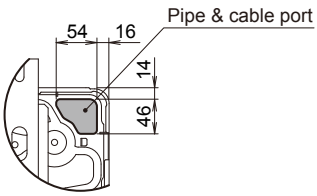

3. INSTALLATION PLACE

3-1. SINGLE OUTDOOR UNIT INSTALLATION

■ WHEN THE UPWARD AREA IS OPEN

(Unit : mm)

Obstacles at rear only

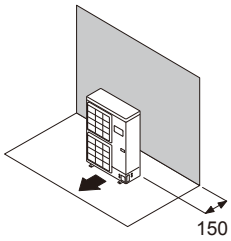

Obstacles at rear and sides only

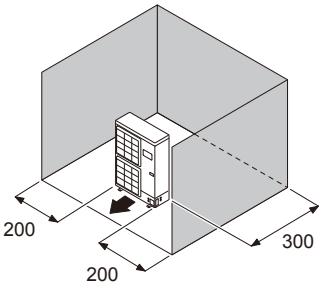

Obstacles at front only

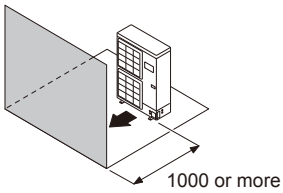

Obstacles at front and rear only

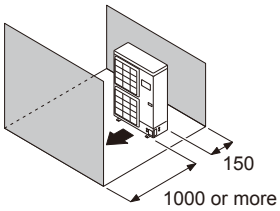

■ WHEN AN OBSTRUCTION IS PRESENT ALSO IN THE UPWARD AREA

(Unit : mm)

Obstacles at rear and above only

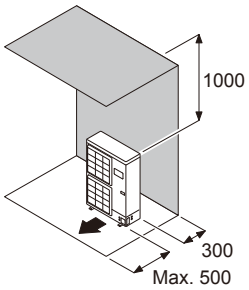

Obstacles at rear, sides, and above only

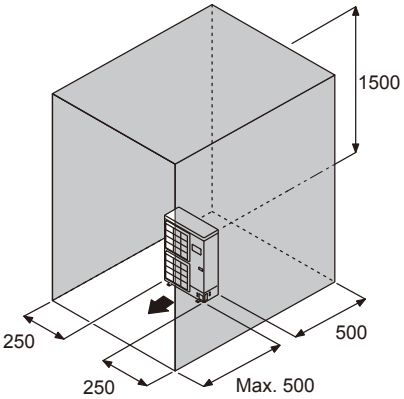

OUTDOOR UNIT
AOTA36-45LC

3-2. MULTIPLE OUTDOOR UNIT INSTALLATION

■ WHEN THE UPWARD AREA IS OPEN

(Unit : mm)

Obstacles at rear only

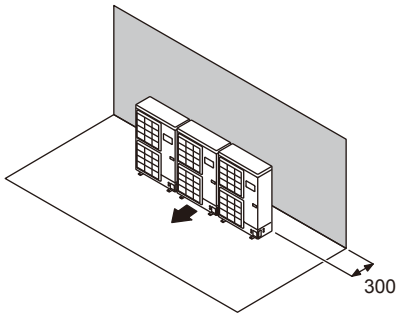

Obstacles at front only

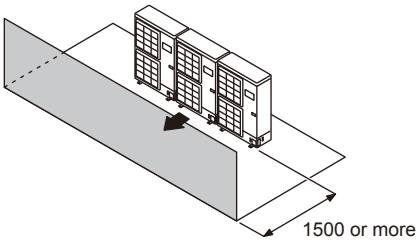

Obstacles at front and rear only

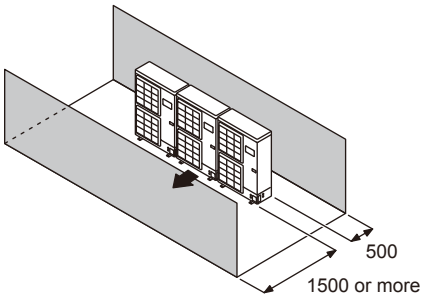

■ WHEN AN OBSTRUCTION IS PRESENT ALSO IN THE UPWARD AREA

(Unit : mm)

Obstacles at rear and above only

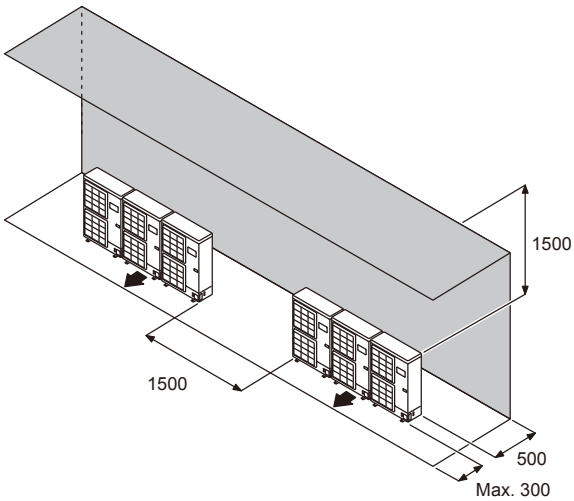

3-3. OUTDOOR UNIT INSTALLATION IN MULTI ROW

(Unit : mm)

Single parallel unit arrangement

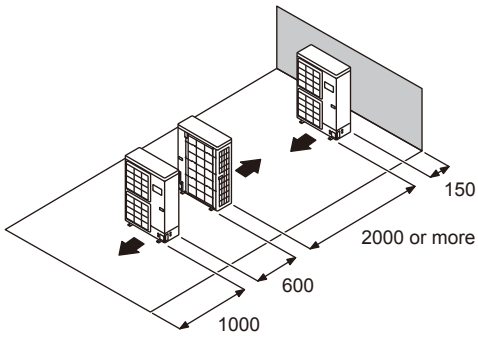

Multiple parallel unit arrangement

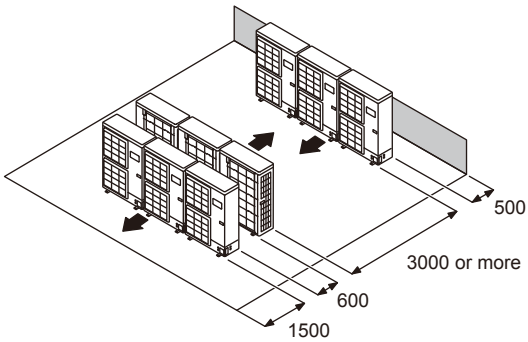

4. REFRIGERANT CIRCUIT

■ MODEL: AOTA36LC, AOTA45LC

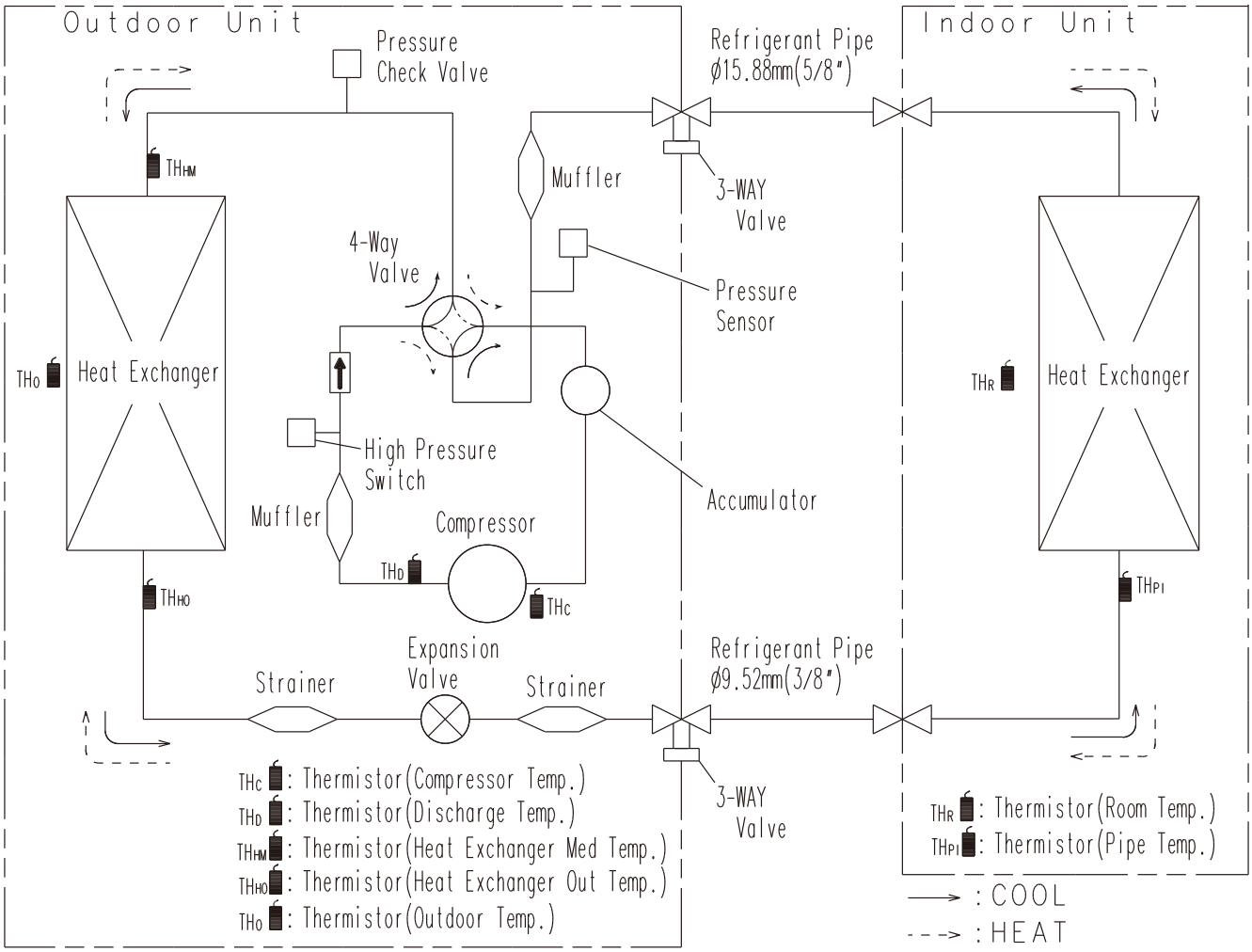

OUTDOOR UNIT
AOTA36-45LC

5. WIRING DIAGRAMS

■ MODEL: AOTA36LC, AOTA45LC

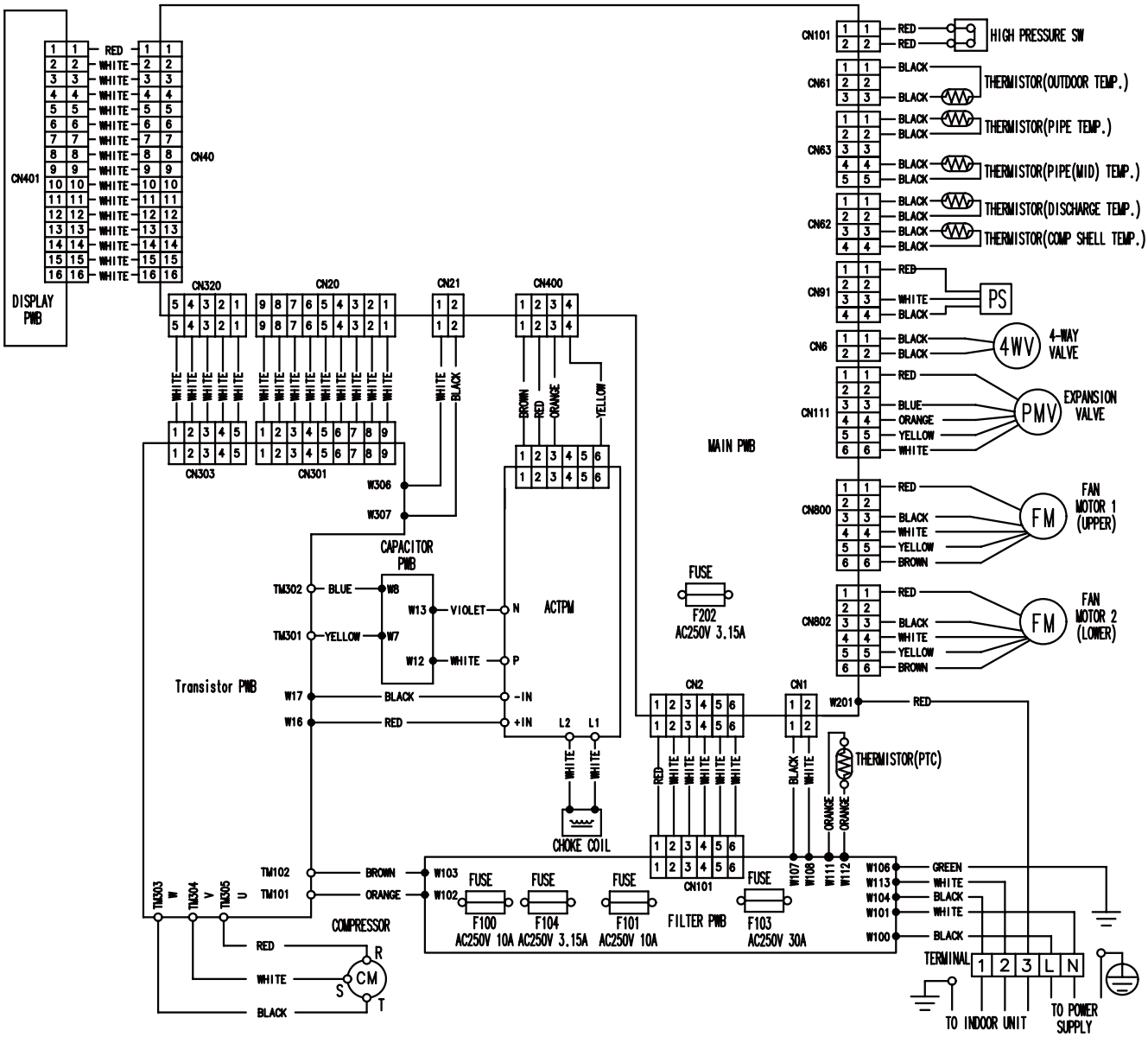

6. CAPACITY COMPENSATION RATE FOR PIPE LENGTH AND HEIGHT DIFFERENCE

■ MODEL: AOTA36LC

COOLING			Pipe length (m)						
			5	7.5	10	20	30	40	50
Height difference H (m)	∗1 Indoor unit is upper than outdoor unit.	30	-	-	-	-	0.879	0.846	0.814
		20	-	-	-	0.926	0.893	0.861	0.828
		10	-	-	0.975	0.942	0.908	0.875	0.841
		7.5	-	0.988	0.979	0.946	0.912	0.878	0.845
		5	0.992	0.992	0.983	0.949	0.916	0.882	0.848
		0	1.000	1.000	0.991	0.957	0.923	0.889	0.855
	∗2 Indoor unit is under than outdoor unit.	-5	1.000	1.000	0.991	0.957	0.923	0.889	0.855
		-7.5	-	1.000	0.991	0.957	0.923	0.889	0.855
		-10	-	-	0.991	0.957	0.923	0.889	0.855
		-20	-	-	-	0.957	0.923	0.889	0.855
		-30	-	-	-	-	0.923	0.889	0.855

HEATING			Pipe length (m)						
			5	7.5	10	20	30	40	50
Height difference H (m)	∗1 Indoor unit is upper than outdoor unit.	30	-	-	-	-	0.978	0.968	0.958
		20	-	-	-	0.988	0.978	0.968	0.958
		10	-	-	0.998	0.988	0.978	0.968	0.958
		7.5	-	1.000	0.998	0.988	0.978	0.968	0.958
		5	1.000	1.000	0.998	0.988	0.978	0.968	0.958
		0	1.000	1.000	0.998	0.988	0.978	0.968	0.958
	∗2 Indoor unit is under than outdoor unit.	-5	0.998	0.995	0.993	0.983	0.973	0.963	0.953
		-7.5	-	0.993	0.991	0.981	0.971	0.961	0.951
		-10	-	-	0.988	0.978	0.968	0.958	0.948
		-20	-	-	-	0.968	0.958	0.949	0.939
		-30	-	-	-	-	0.949	0.939	0.929

Height difference H

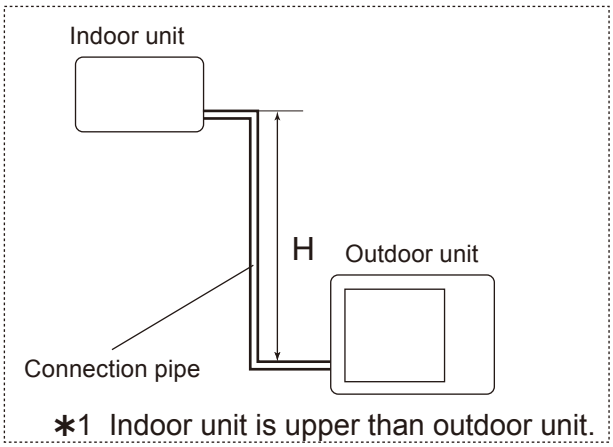

∗1 Indoor unit is upper than outdoor unit.

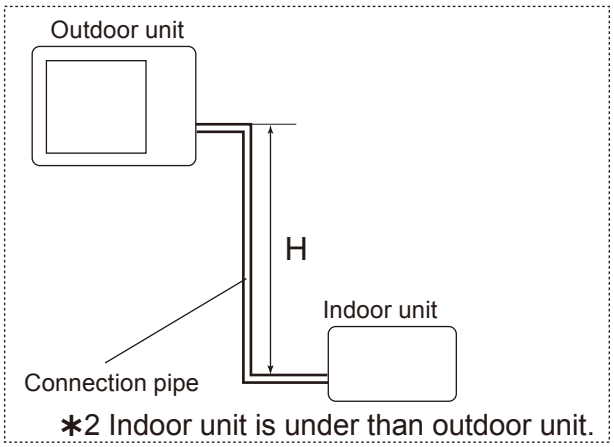

∗2 Indoor unit is under than outdoor unit.

OUTDOOR UNIT
AOTA36-45LC

■ MODEL: AOTA45LC

COOLING			Pipe length (m)						
			5	7.5	10	20	30	40	50
Height difference H (m)	∗1 Indoor unit is upper than outdoor unit.	30	-	-	-	-	0.871	0.837	0.803
		20	-	-	-	0.921	0.886	0.851	0.816
		10	-	-	0.971	0.936	0.900	0.865	0.830
		7.5	-	0.988	0.975	0.940	0.904	0.868	0.833
		5	0.992	0.992	0.979	0.943	0.908	0.872	0.836
		0	1.000	1.000	0.987	0.951	0.915	0.879	0.843
	∗2 Indoor unit is under than outdoor unit.	-5	1.000	1.000	0.987	0.951	0.915	0.879	0.843
		-7.5	-	1.000	0.987	0.951	0.915	0.879	0.843
		-10	-	-	0.987	0.951	0.915	0.879	0.843
		-20	-	-	-	0.951	0.915	0.879	0.843
		-30	-	-	-	-	0.915	0.879	0.843

HEATING			Pipe length (m)						
			5	7.5	10	20	30	40	50
Height difference H (m)	∗1 Indoor unit is upper than outdoor unit.	30	-	-	-	-	0.978	0.968	0.958
		20	-	-	-	0.988	0.978	0.968	0.958
		10	-	-	0.998	0.988	0.978	0.968	0.958
		7.5	-	1.000	0.998	0.988	0.978	0.968	0.958
		5	1.000	1.000	0.998	0.988	0.978	0.968	0.958
		0	1.000	1.000	0.998	0.988	0.978	0.968	0.958
	∗2 Indoor unit is under than outdoor unit.	-5	0.998	0.995	0.993	0.983	0.973	0.963	0.953
		-7.5	-	0.993	0.991	0.981	0.971	0.961	0.951
		-10	-	-	0.988	0.978	0.968	0.958	0.948
		-20	-	-	-	0.968	0.958	0.949	0.939
		-30	-	-	-	-	0.949	0.939	0.929

Height difference H

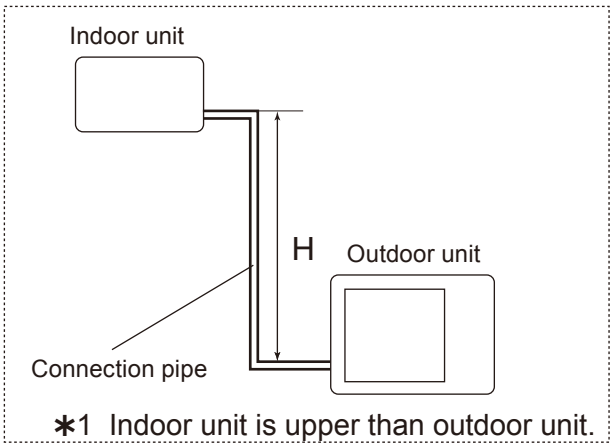

∗1 Indoor unit is upper than outdoor unit.

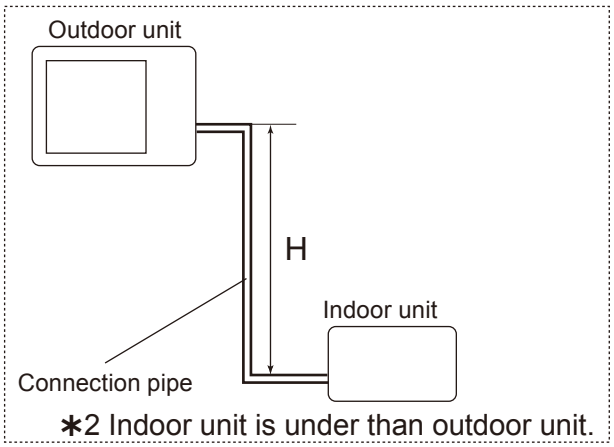

∗2 Indoor unit is under than outdoor unit.

7. ADDITIONAL CHARGE CALCULATION

■ MODEL: AOTA36LC, AOTA45LC

Refrigerant type		R410A
Refrigerant amount	g	3,350

● Refrigerant charge

Total pipe length	m	20 or less	30	40	50 (MAX)	40g/m
Additional charge	g	0	400	800	1200	

OUTDOOR UNIT
AOTA36-45LC

8. AIR FLOW

■ MODEL: AOTA36LC, AOTA45LC

● Cooling

MODEL		Number of rotations (r.p.m.)	Air flow	
AOTA36LC	Upper fan	780	m^3/h	6200
			l/s	1722
	Lower fan	750	CFM	3650
AOTA45LC	Upper fan	850	m^3/h	6750
			l/s	1875
	Lower fan	800	CFM	3974

● Heating

MODEL		Number of rotations (r.p.m.)	Air flow	
AOTA36LC	Upper fan	780	m^3/h	6200
			l/s	1722
	Lower fan	750	CFM	3650
AOTA45LC	Upper fan	780	m^3/h	6200
			l/s	1722
	Lower fan	750	CFM	3650

OUTDOOR UNIT
AOTA36-45LC

9. OPERATION NOISE

9-1. NOISE LEVEL CURVE

■ MODEL: AOTA36LC

● Cooling

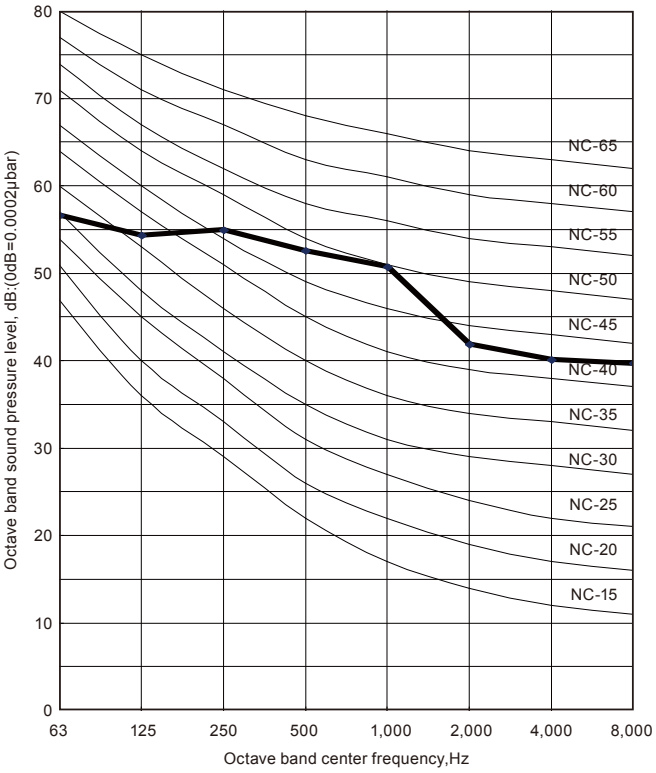

● Heating

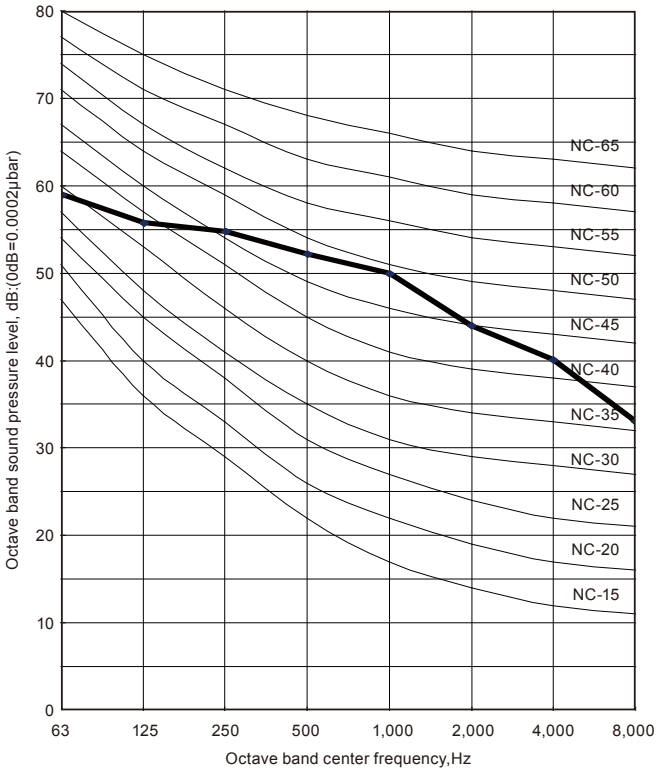

■ MODEL: AOTA45LC

● Cooling

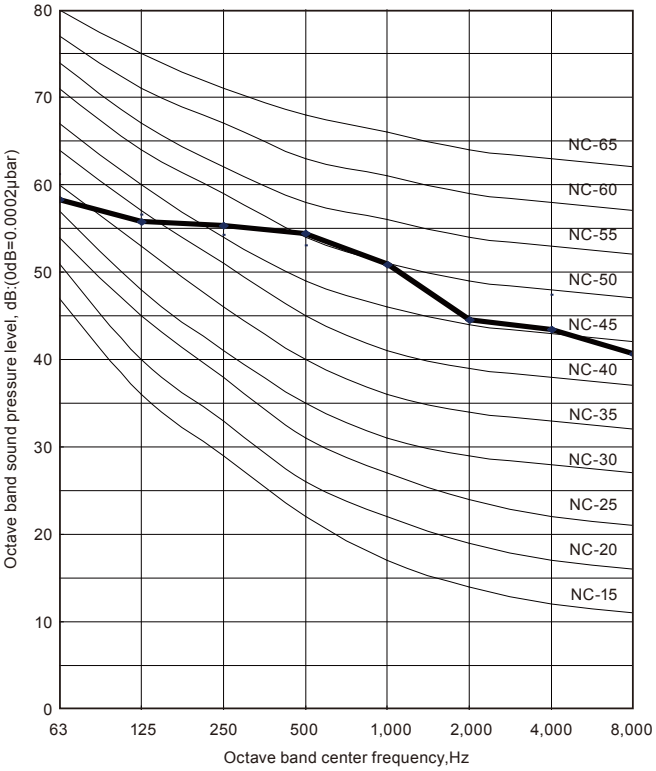

● Heating

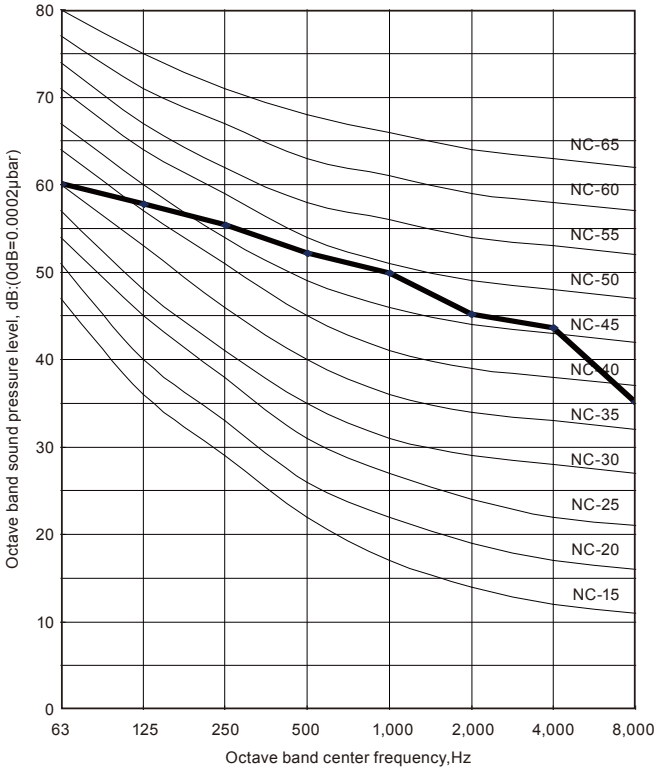

OUTDOOR UNIT
AOTA36-45LC

9-2. SOUND LEVEL CHECK POINT

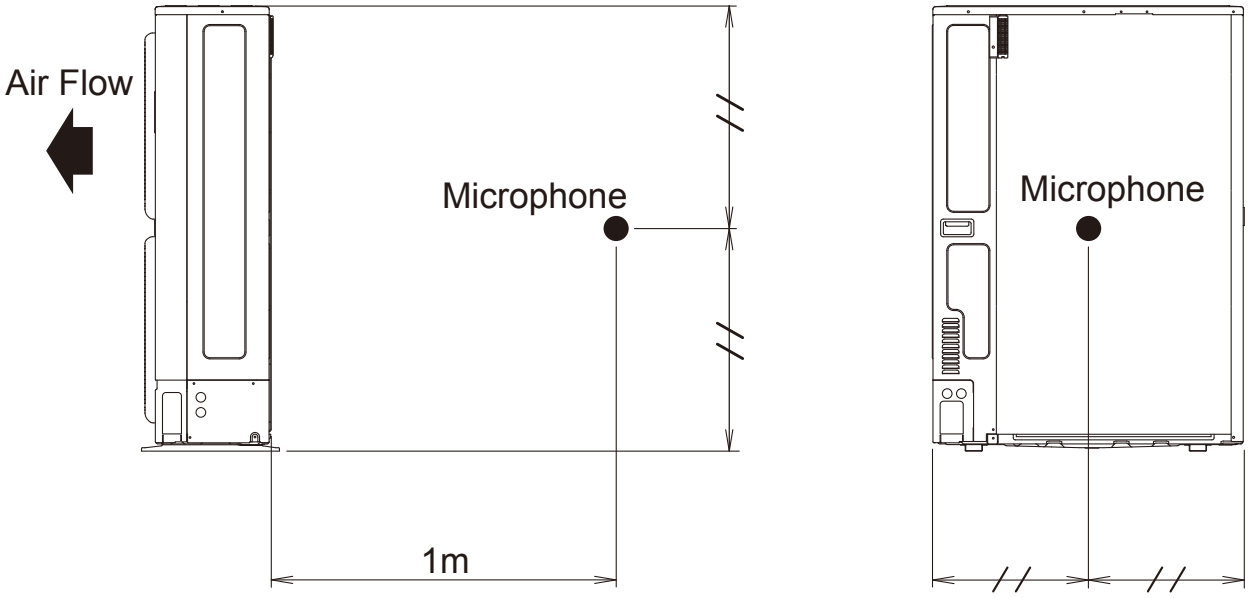

OUTDOOR UNIT
AOTA36-45LC

10. ELECTRIC CHARACTERISTICS

Model name			AOTA36LC	AOTA45LC
Power supply	Voltage	V	240 ~	
	Frequency	Hz	50	
*1) Max. operating current		A	20.0	21.0
*2) Wiring spec.	Main fuse (Circuit breaker) Current	A	30	
	Power cable	mm^2	6.0	

*1) The maximum current is the total current of indoor unit and outdoor unit.
*2) Wiring spec. :
Selected sample
(Selected based on Japan Electrotechnical Standard and Codes Committee E0005)

OUTDOOR UNIT
AOTA36-45LC

11. SAFETY DEVICES

	Protection form	Model	
		AOTA36LC	AOTA45LC
Circuit protection	Current fuse (Filter printed circuit board)	10A 250V, 3.15A 250V	
	Current fuse (Main printed circuit board)	3.15A 250V	
Fan motor protector	Thermal protector	OFF : 150±15°C ON : 120±15°C	
Compressor protection	Thermal protection program (Compressor temp.)	OFF : 108°C ON : 80°C	
	Thermal protection program (Discharge temp.)	OFF : 110°C ON : After 7 minutes	
High pressure protection	Pressure switch	OFF : 4.2±0.1MPa ON : 3.2±0.15MPa	
Low pressure protection	Pressure sensor	OFF : 0.12MPa ON : 0.15MPa	

OUTDOOR UNIT
AOTA36-45LC

12. EXTERNAL INPUT & OUTPUT

Input	Output	Connector	Remarks
Low noise mode	—	CN10	See external input/output settings for details.
Peak cut mode	—	CN11	
—	Error status	CN12	
—	Compressor status	CN13	

OUTDOOR UNIT
AOTA36-45LC

12-1. EXTERNAL INPUT

ON/OFF of the "Low noise mode" and "Peak cut mode" functions can be specified by external signal.

■ LOW NOISE MODE

- The following reduces the operating sound of the outdoor unit from the normal sound.
  The air conditioner is set to the "Low noise mode" when closing the contact input of a commercial timer or ON/OFF switch to a connector on the outdoor control PC board.

* Performance may drop depending on the outside air temperature condition, etc.

● Circuit diagram example

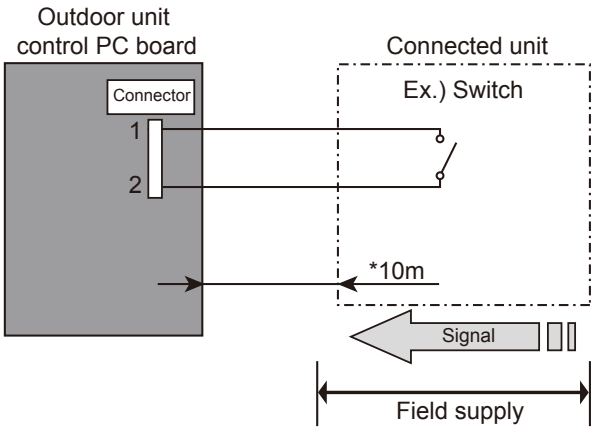

Contact capacity : 24VDC or more, 10mA or more.

* Make the distance from the PC board to the connected unit within 10m.

- Use the following parts and construct a circuit as shown above.
- Input Signal···ON : Low noise mode, Input Signal···OFF : Normal operation

* Set the "Low noise mode" level, refer to "13.FUNCTION SETTING".

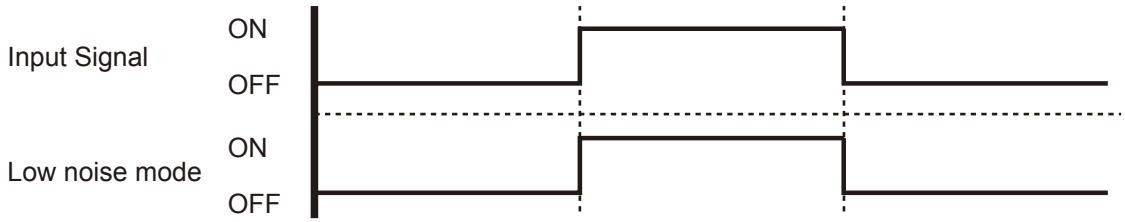

● Parts (Optional)

Parts name	External connect kit
Model name	UTY-XWZXZ3

OUTDOOR UNIT
AOTA36-45LC

■ PEAK CUT MODE

- Operation that suppressed the current value can be performed by means of the following on-site work. The air conditioner is set to the Peak cut mode when closing the contact input of a commercial ON/OFF switch to a connector on the outdoor control PC board.

● Circuit diagram example

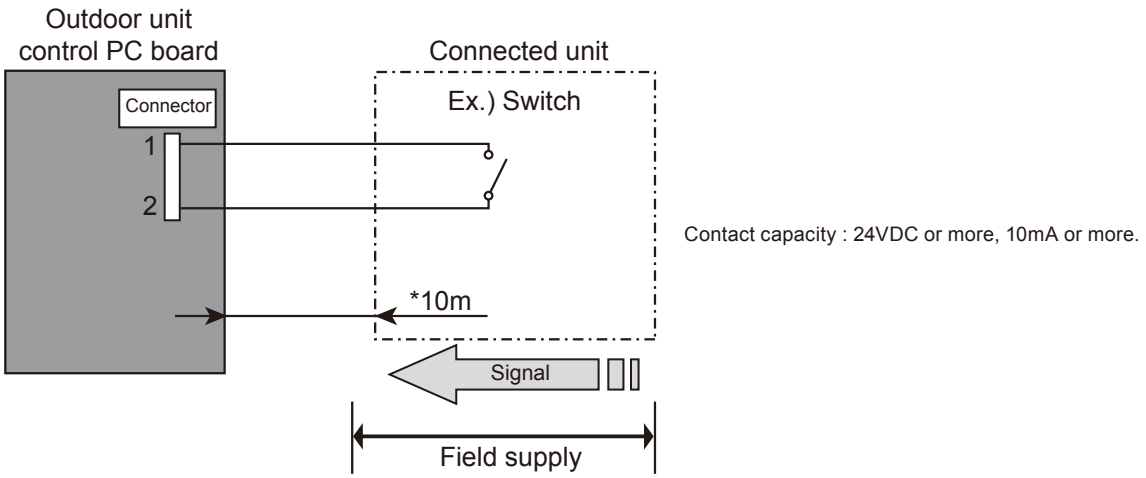

* Make the distance from the PC board to the connected unit within 10m.

- Use the following parts and construct a circuit as shown above.
- Input Signal···ON : Peak cut mode, Input Signal···OFF : Normal operation
  *Set the "Peak cut mode" level, refer to "13.FUNCTION SETTING".

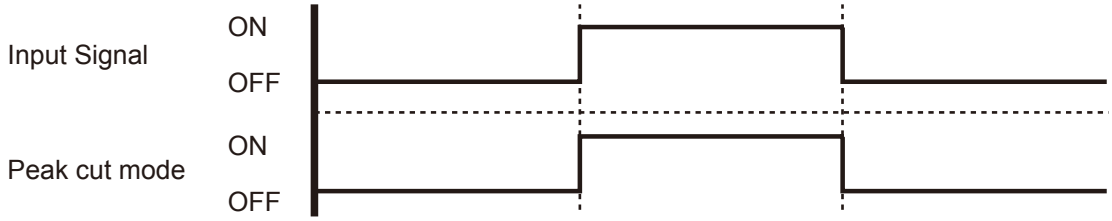

● Parts (Optional)

Parts name	External connect kit
Model name	UTY-XWZXZ3

12-2. EXTERNAL OUTPUT

■ ERROR STATUS OUTPUT

• An air conditioner error status signal is produced when a malfunction occurs.

● Circuit diagram example

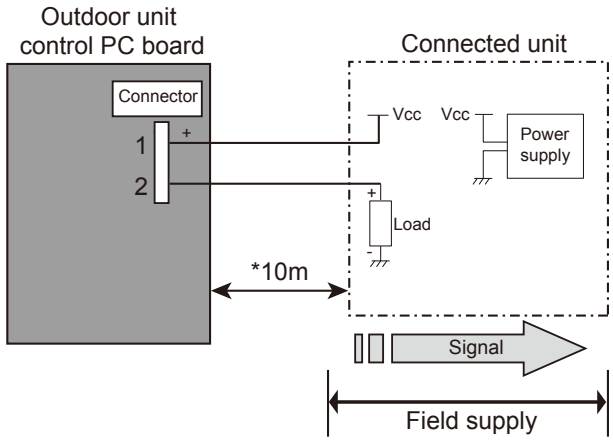

1) Power supply
●Voltage (Chart sign=Vcc) : DC 24V or less
2) Load
●Load : DC 500mA or less is recommended

* Make the distance from the PC board to the connected unit within 10m.

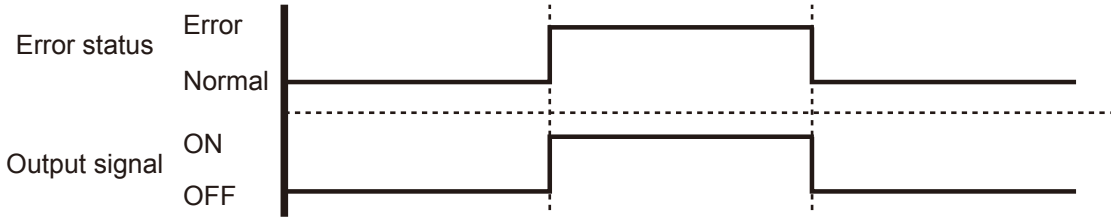

● Parts (Optional)

Parts name	External connect kit
Model name	UTY-XWZXZ3

OUTDOOR UNIT
AOTA36-45LC

■ COMPRESSOR STATUS OUTPUT

• Compressor operation status signal is produced when the compressor is running.

● Circuit diagram example

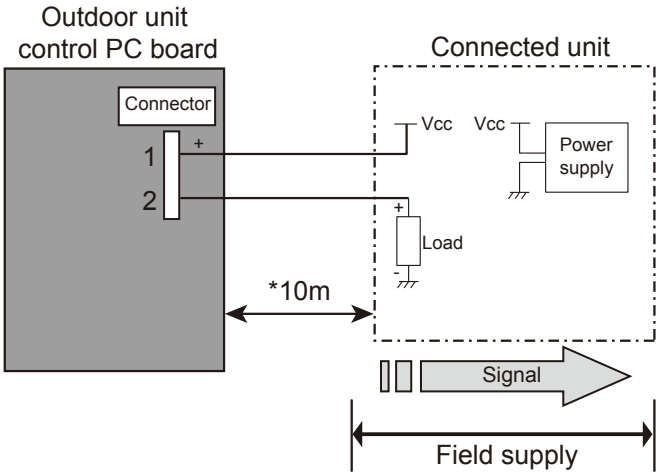

1) Power supply
●Voltage (Chart sign=Vcc) : DC 24V or less
2) Load
●Load : DC 500mA or less is recommended

* Make the distance from the PC board to the connected unit within 10m.

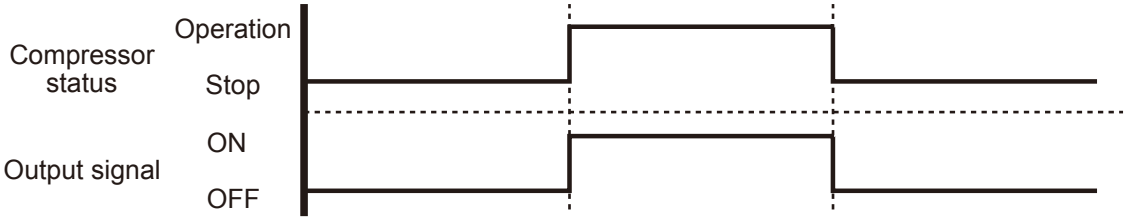

● Parts (Optional)

Parts name	External connect kit
Model name	UTY-XWZXZ3

13. FUNCTION SETTING

⚠ Caution

Discharge the static electricity from your body before setting up the push buttons.
Never touch the terminals or the patterns on the parts that are mounted on the board.

13-1. FIELD SETTING SWITCHES

The positions of the switches on the outdoor unit control board are shown in the figure below.

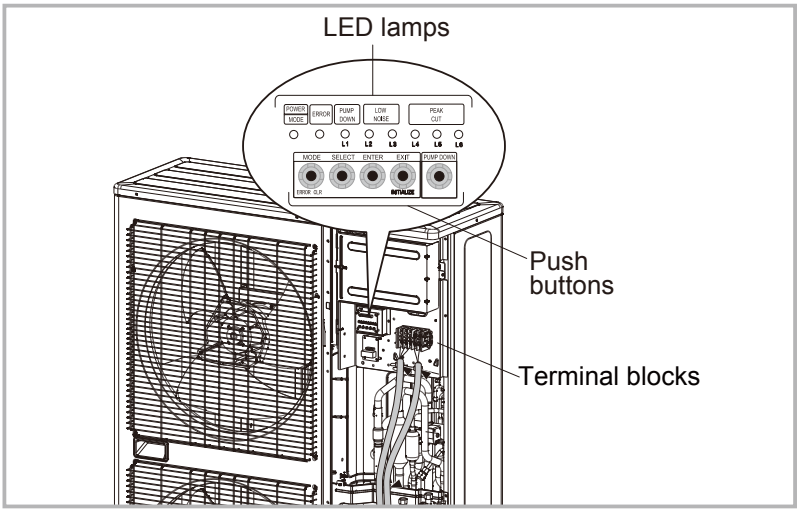

■ FUNCTIONS

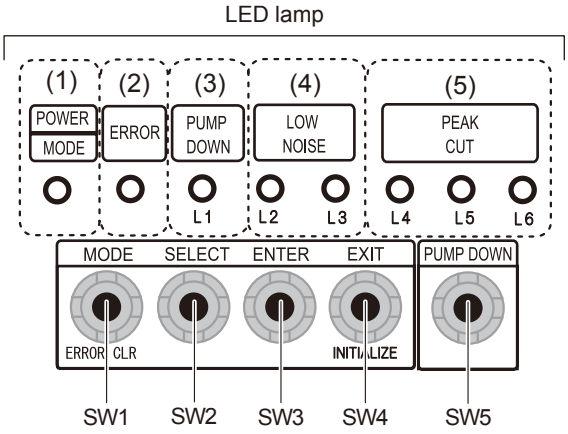

Display lamp		Function or operation method
(1) POWER / MODE	Green	Lights on while power on. Local setting in outdoor unit or error code is displayed with blink.
(2) ERROR	Red	Blinks during error operation.
(3) PUMP DOWN (L1)	Orange	Lights on during pump down operation.
(4) LOW NOISE MODE (L2,L3)	Orange	Lights on during “Low noise” mode when local setting is activated. (Lighting pattern of L2 and L3 indicates low noise level)
(5) PEAK CUT MODE (L4,L5,L6)	Orange	Lights on during “Peak cut” mode when local setting is activated. (Lighting pattern of L4, L5 and L6 indicates peak cut level)

Button		Function or operation method
SW1	MODE	To switch between “Local setting” and “Error code display”.
SW2	SELECT	To switch between the individual “Local settings” and the “Error code displays”.
SW3	ENTER	To fix between the individual “Local settings” and the “Error code displays”.
SW4	EXIT	To return to “Operation status display”.
SW5	PUMP DOWN	To start the pump down operation.

OUTDOOR UNIT
AOTA36-45LC

13-2. SETTING METHOD

※ Stop the operation of air conditioner before this setting.

13-2-1. LOW NOISE MODE

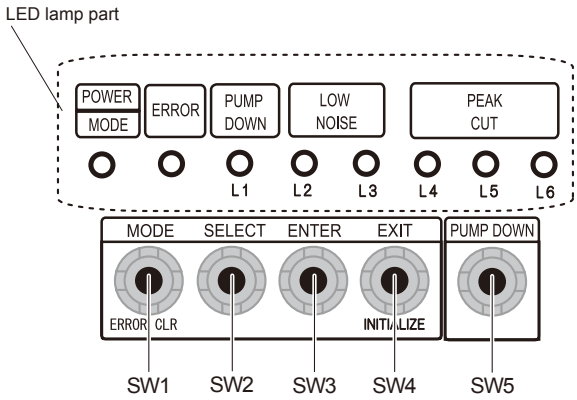

(1) Switch to “Local setting mode” by pressing [MODE] button (SW1) for 3 seconds or more.

(2) Confirm (POWER / MODE) blinks 9 times, and press [ENTER] button (SW3).

POWER / MODE	ERROR	PUMP DOWN (L1)	LOW NOISE (L2)	LOW NOISE (L3)	PEAK CUT (L4)	PEAK CUT (L5)	PEAK CUT (L6)
Blinks (9 times)	○	○	○	○	○	○	○

Sign “ ○ ” : Lights off

(3) Press [SELECT] button (SW2), and adjust LED lamp as shown below. (Current setting is displayed)

	LOW NOISE (L2)	LOW NOISE (L3)
LOW NOISE MODE	○	Blink

(4) Press [ENTER] button (SW3).

	LOW NOISE (L2)	LOW NOISE (L3)
LOW NOISE MODE	○	●

Sign “ ● ” : Lights on

(5) Press [SELECT] button (SW2), and adjust LED lamp as shown in below figure.

	PEAK CUT (L4)	PEAK CUT (L5)	PEAK CUT (L6)
MODE 1	○	○	Blink
MODE 2	○	Blink	○

The noise of MODE2 is lower than one of MODE1.

(6) Press [ENTER] button (SW3) and fix it.

	PEAK CUT (L4)	PEAK CUT (L5)	PEAK CUT (L6)
MODE 1	○	○	●
MODE 2	○	●	○

(7) Return to “Operating status display (Normal operation)” by pressing [EXIT] button (SW4).

- In case of missing how many times [SELECT] and [ENTER] button are pressed, restart from the beginning of operation procedure after returning to “Operation status display (normal operation)” by pressing the [EXIT] button once.

13-2-2. PEAK CUT MODE

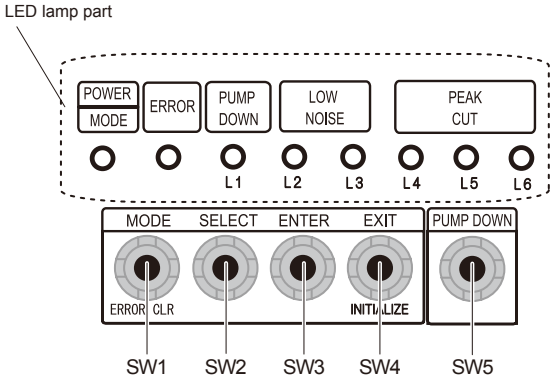

(1) Switch to “Local setting mode” by pressing [MODE] button (SW1) for 3 seconds or more.

(2) Confirm (POWER / MODE) blinks 9 times, and press [ENTER] button (SW3).

POWER / MODE	ERROR	PUMP DOWN (L1)	LOW NOISE (L2)	LOW NOISE (L3)	PEAK CUT (L4)	PEAK CUT (L5)	PEAK CUT (L6)
Blinks (9 times)	○	○	○	○	○	○	○

Sign “ ○ ” : Lights off

(3) Press [SELECT] button (SW2), and adjust LED lamp as shown below. (Current setting is displayed)

	LOW NOISE (L2)	LOW NOISE (L3)
PEAK CUT MODE	Blink	○

(4) Press [ENTER] button (SW3).

	LOW NOISE (L2)	LOW NOISE (L3)
PEAK CUT MODE	●	○

Sign “ ● ” : Lights on

(5) Press [SELECT] button (SW2), and adjust LED lamp as shown in below figure.

	PEAK CUT (L4)	PEAK CUT (L5)	PEAK CUT (L6)
100% of rated input ratio	○	○	Blink
75% of rated input ratio	○	Blink	○
50% of rated input ratio	○	Blink	Blink
0% of rated input ratio	Blink	○	○

(6) Press [ENTER] button (SW3) and fix it.

	PEAK CUT (L4)	PEAK CUT (L5)	PEAK CUT (L6)
100% of rated input ratio	○	○	●
75% of rated input ratio	○	●	○
50% of rated input ratio	○	●	●
0% of rated input ratio	●	○	○

(7) Return to “Operating status display (Normal operation)” by pressing [EXIT] button (SW4).

- When pressed number is lost during operation, restart from the beginning of operation procedure after returning to “Operation status display (normal operation)” by pressing the [EXIT] button once.

14. OPTIONAL PARTS

Exterior	Parts name	Model No.	Summary
	External connect kit	UTY-XWZXZ3	Use to operate the External input and output function of Outdoor unit.

OUTDOOR UNIT
AOTA36-45LC

2. OUTDOOR UNIT

SINGLE TYPE :

AOTA36LBTL
AOTA45LBTL

D2D_AO055E/02
2011.02.24

CONTENTS

2. OUTDOOR UNIT

2-1. SPECIFICATIONS

Type				INVERTER HEATPUMP	
Model name				AOTA36LBTL	AOTA45LBTL
Power source				240V~ 50Hz	
Available voltage range				198-264V ~ 50Hz	
Starting current			A	15.0	15.0
Fan	Airflow rate	Cooling	l/s (m^3/h)	1833 (6600)	1833 (6600)
		Heating		1833 (6600)	1833 (6600)
	Type × Q'ty			Propeller × 2	
	Motor output		W	103 × 2	
Sound pressure level		Cooling	dB(A)	54	55
		Heating		55	56
Heat exchanger type		Dimensions (H × W × D)	mm	1260 × 900 × 36.4	
		Fin pitch		1.30	
		Rows x Stages		2 × 60	
		Pipe type		Copper	
		Fin type		Aluminium	
Compressor	Type × Q'ty			Twin Rotary × 1	
	Motor output		W	3750	
Refrigerant		Type		R410A	
		Charge	g	3350	
Refrigerant oil		Type		POE	
Enclosure		Material		Steel sheet	
		Colour		BEIGE (Approximate colour of MUNSELL 10YR7.5 / 1.0)	
Dimensions (H×W×D)	Net		mm	1290 × 900 × 330	
	Gross			1430 × 1050 × 445	
Weight	Net		kg(lbs.)	98 (216)	
	Gross			107 (236)	
Connection pipe	Size	Liquid	mm	Ø 9.52 (Ø3/8 in.)	
		Gas		Ø15.88 (Ø5/8 in.)	
	Method			Flare	
	Pre-charge length		m	20	
	Max. length			50	
	Max. height difference			30	
Operation range		Cooling	°C	-15 to 46	
		Heating		-15 to 24	
International Protection rating				IPX4	

Note :
Specifications are based on the following conditions.
Cooling : Indoor temperature of 27 °CDB / 19 °CWB.and outdoor temperature of 35 °CDB/24 °CWB.
Heating : Indoor temperature of 20 °CDB / 15 °CWB.and outdoor temperature of 7 °CDB/6 °CWB.
Pipe length : 7.5 m, Height difference : 0 m.(Outdoor unit - Indoor unit)

OUTDOOR UNIT
AOTA36-45L

2-2. DIMENSIONS

■ MODEL: AOTA36L, AOTA45L

(Unit : mm)

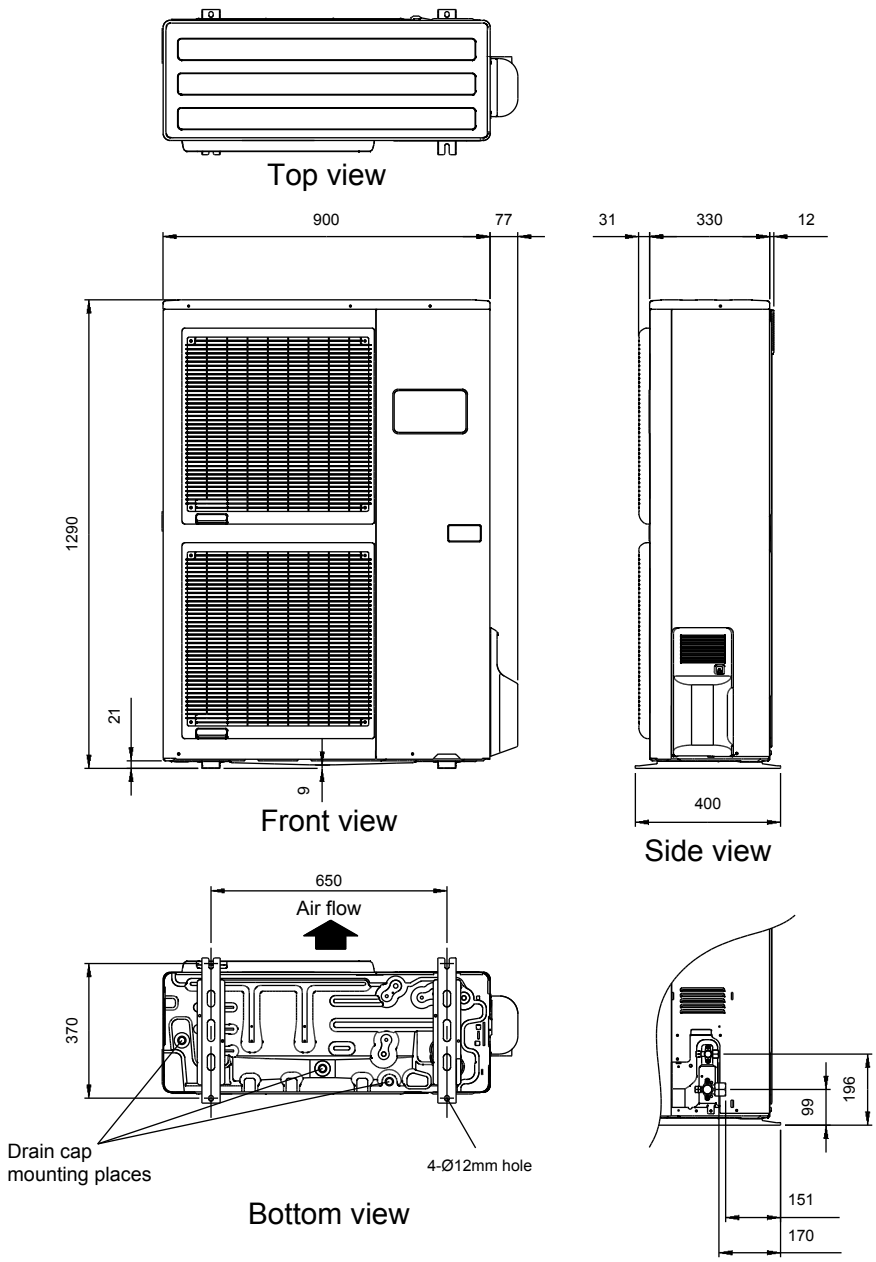

■ INSTALLATION PLACE

When there are obstacles at the back or front side.

When there are obstacles at the back and front sides.

When there are obstacles at the back, side(s), and top.

When there are obstacles at the back side with the installation of more than one unit.

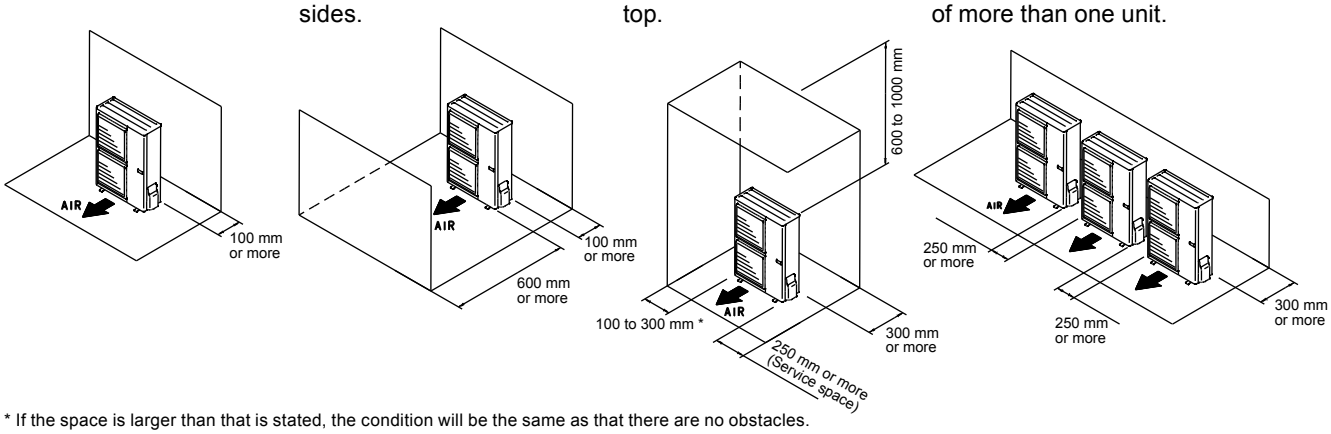

* If the space is larger than that is stated, the condition will be the same as that there are no obstacles.

2-3. REFRIGERANT CIRCUIT

■ MODEL: AOTA36L, AOTA45L

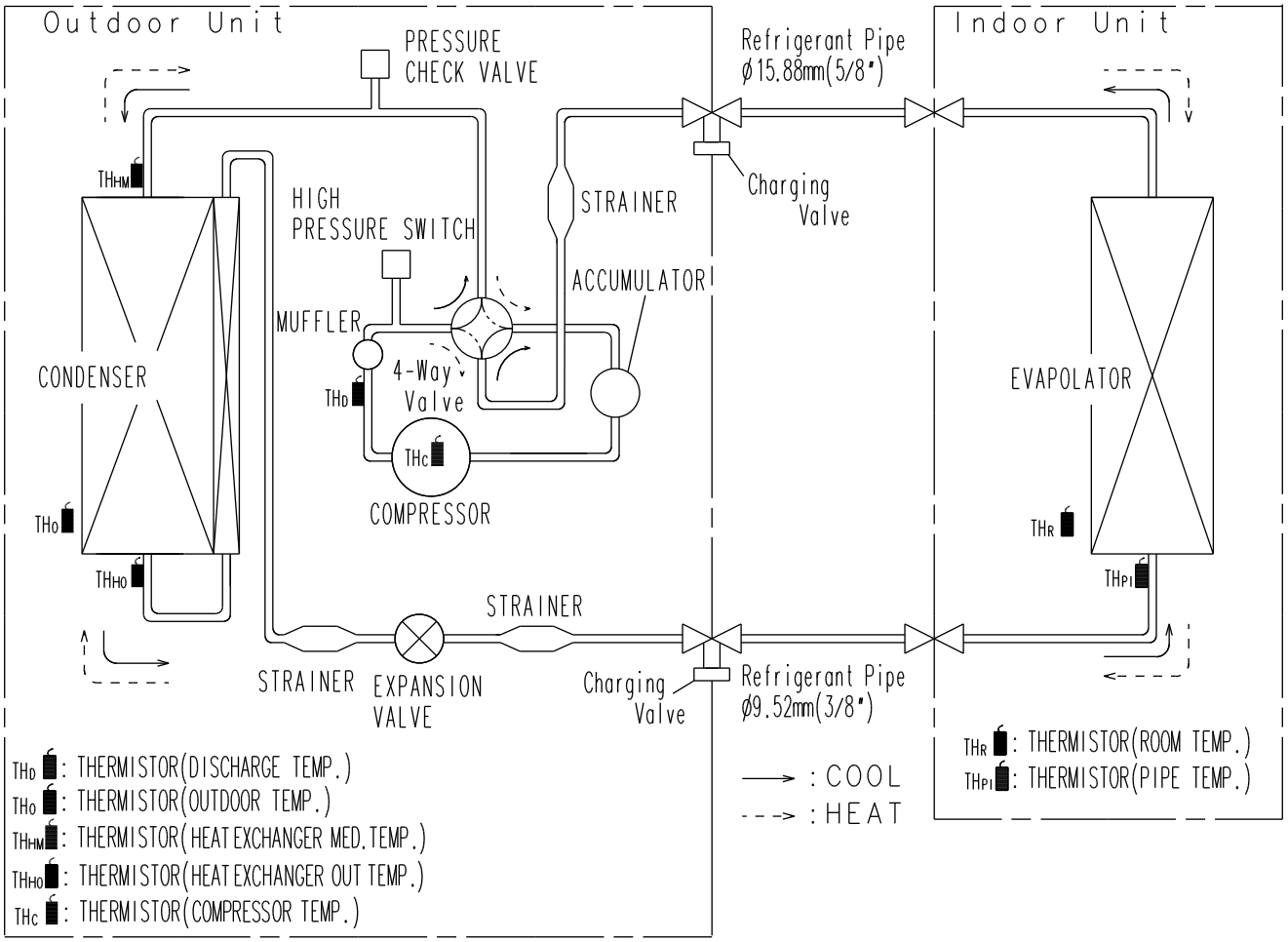

OUTDOOR UNIT
AOTA36-45L

2-4. WIRING DIAGRAMS

■ MODEL: AOTA36L, AOTA45L

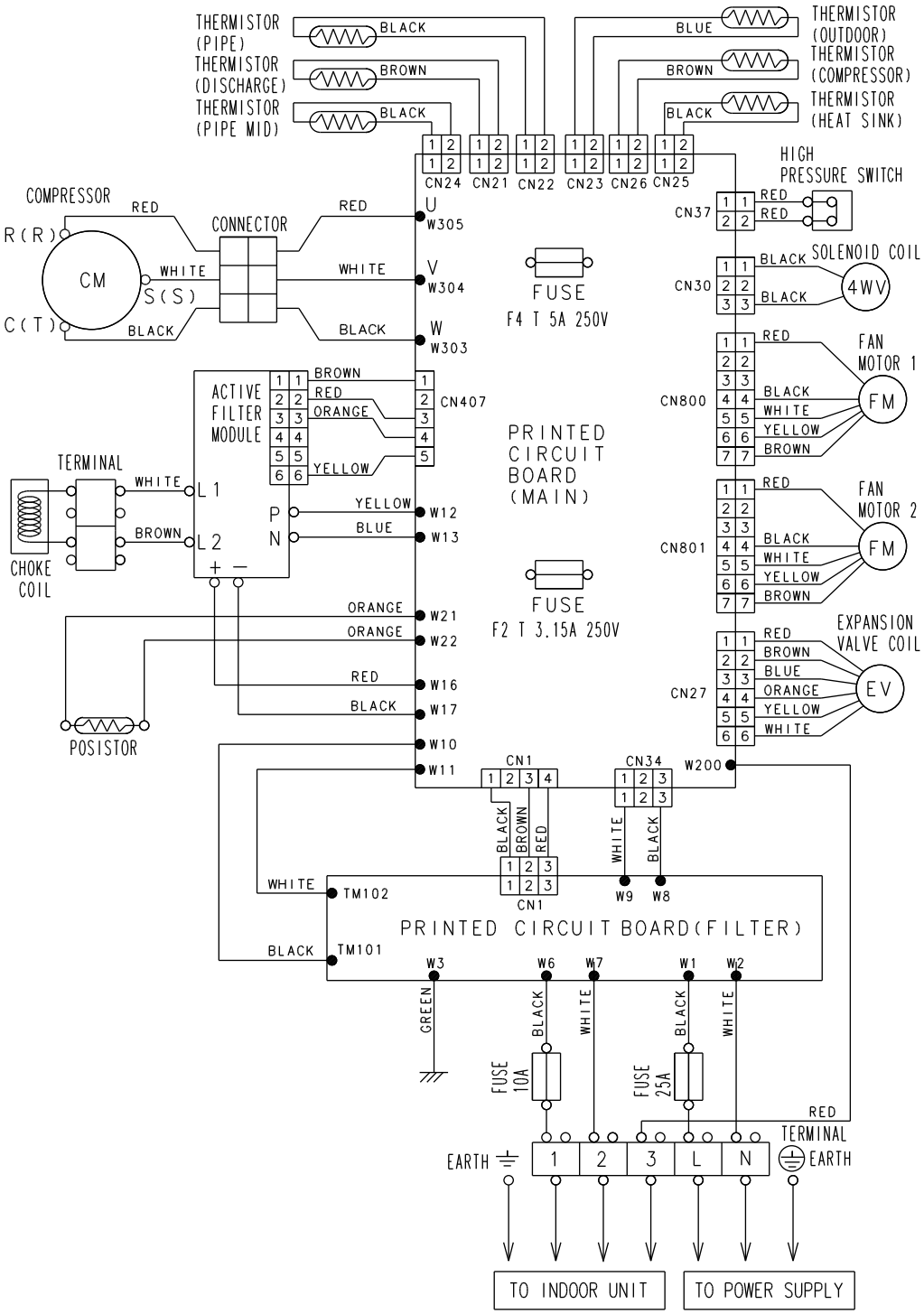

2-5. CAPACITY COMPENSATION RATE FOR PIPE LENGTH AND HEIGHT DIFFERENCE

This table is created using the maximum capacity.

■ MODEL: AOTA36L

COOLING			Pipe length (m)						
			5	7.5	10	20	30	40	50
Height difference H (m)	∗1 Indoor unit is upper than outdoor unit.	30	-	-	-	-	0.884	0.881	0.862
		20	-	-	-	0.910	0.899	0.896	0.876
		10	-	-	0.969	0.925	0.914	0.911	0.890
		7.5	-	0.988	0.973	0.929	0.918	0.914	0.894
		5	1.001	0.992	0.977	0.932	0.921	0.918	0.898
		0	1.009	1.000	0.985	0.940	0.929	0.926	0.905
	∗2 Indoor unit is under than outdoor unit	-5	1.009	1.000	0.985	0.940	0.929	0.926	0.905
		-7.5	-	1.000	0.985	0.940	0.929	0.926	0.905
		-10	-	-	0.985	0.940	0.929	0.926	0.905
		-20	-	-	-	0.940	0.929	0.926	0.905
		-30	-	-	-	-	0.929	0.926	0.905

HEATING			Pipe length (m)						
			5	7.5	10	20	30	40	50
Height difference H (m)	∗1 Indoor unit is upper than outdoor unit.	30	-	-	-	-	0.971	0.950	0.927
		20	-	-	-	0.985	0.971	0.950	0.927
		10	-	-	1.016	0.985	0.971	0.950	0.927
		7.5	-	1.000	1.016	0.985	0.971	0.950	0.927
		5	0.978	1.000	1.016	0.985	0.971	0.950	0.927
		0	0.978	1.000	1.016	0.985	0.971	0.950	0.927
	∗2 Indoor unit is under than outdoor unit	-5	0.973	0.995	1.011	0.980	0.966	0.945	0.923
		-7.5	-	0.993	1.009	0.978	0.963	0.943	0.920
		-10	-	-	1.006	0.975	0.961	0.940	0.918
		-20	-	-	-	0.966	0.951	0.931	0.909
		-30	-	-	-	-	0.942	0.921	0.899

Height difference H

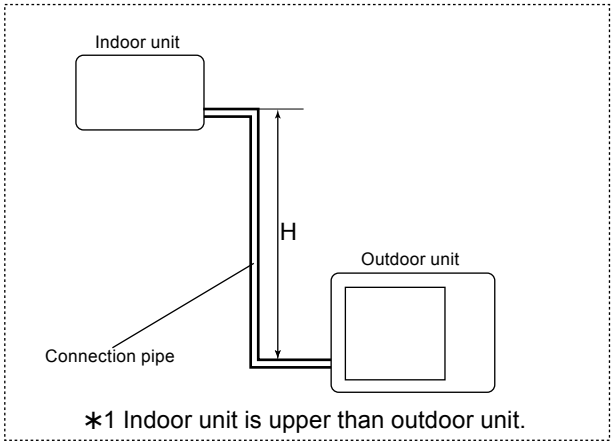

∗1 Indoor unit is upper than outdoor unit.

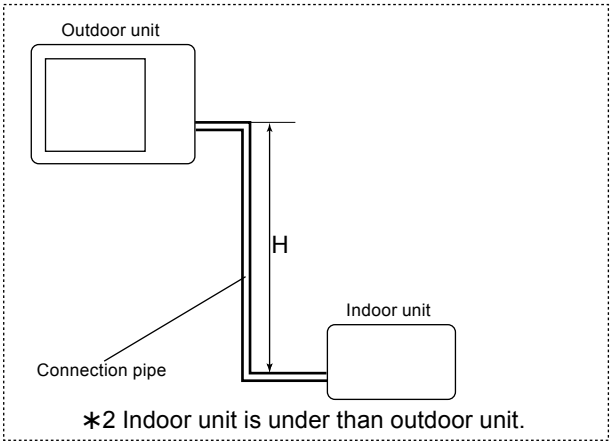

∗2 Indoor unit is under than outdoor unit.

This table is created using the maximum capacity.

■ MODEL: AOTA45L

COOLING			Pipe length (m)						
			5	7.5	10	20	30	40	50
Height difference H (m)	∗1 Indoor unit is upper than outdoor unit.	30	–	–	–	–	0.893	0.890	0.870
		20	–	–	–	0.919	0.908	0.905	0.885
		10	–	–	0.979	0.934	0.923	0.920	0.899
		7.5	–	0.988	0.983	0.938	0.927	0.924	0.903
		5	1.001	0.992	0.987	0.942	0.931	0.927	0.907
		0	1.009	1.000	0.995	0.949	0.938	0.935	0.914
	∗2 Indoor unit is under than outdoor unit	-5	1.009	1.000	0.995	0.949	0.938	0.935	0.914
		-7.5	–	1.000	0.995	0.949	0.938	0.935	0.914
		-10	–	–	0.995	0.949	0.938	0.935	0.914
		-20	–	–	–	0.949	0.938	0.935	0.914
		-30	–	–	–	–	0.938	0.935	0.914

HEATING			Pipe length (m)						
			5	7.5	10	20	30	40	50
Height difference H (m)	∗1 Indoor unit is upper than outdoor unit.	30	–	–	–	–	0.971	0.950	0.927
		20	–	–	–	0.985	0.971	0.950	0.927
		10	–	–	1.016	0.985	0.971	0.950	0.927
		7.5	–	1.000	1.016	0.985	0.971	0.950	0.927
		5	0.978	1.000	1.016	0.985	0.971	0.950	0.927
		0	0.978	1.000	1.016	0.985	0.971	0.950	0.927
	∗2 Indoor unit is under than outdoor unit	-5	0.973	0.995	1.011	0.980	0.966	0.945	0.923
		-7.5	–	0.993	1.009	0.978	0.963	0.943	0.920
		-10	–	–	1.006	0.975	0.961	0.940	0.918
		-20	–	–	–	0.966	0.951	0.931	0.909
		-30	–	–	–	–	0.942	0.921	0.899

Height difference H

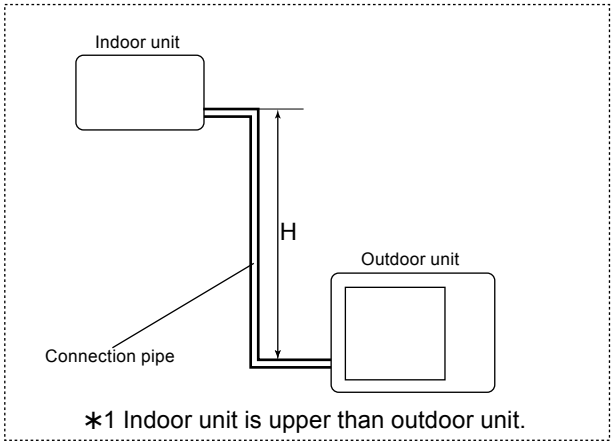

∗1 Indoor unit is upper than outdoor unit.

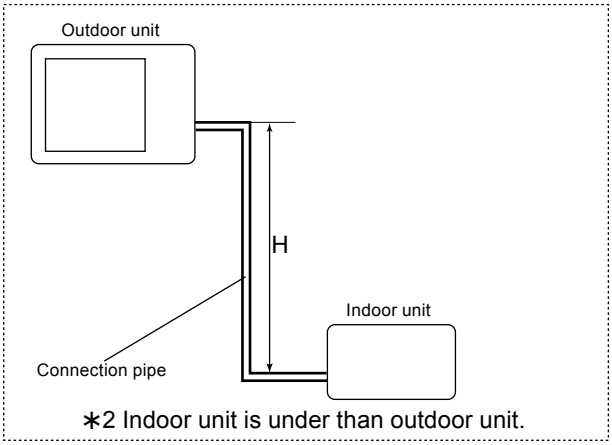

∗2 Indoor unit is under than outdoor unit.

2-6. ADDITIONAL CHARGE CALCULATION

■ MODEL : AOTA36L, AOTA45L

Refrigerant type		R410A
Refrigerant amount	g	3350

● Refrigerant charge

Total pipe length	m	20 or less	30	40	50	50g/m
Additional charge	g	0	500	1000	1500	

OUTDOOR UNIT
AOTA36-45L

2-7. AIR FLOW

■ MODEL: AOTA36L, AOTA45L

● Cooling

	Number of rotations (r.p.m)	Air flow	
Upper fan	850	m^3/h	6600
		l/s	1833
Lower fan	750	CFM	3884

● Heating

	Number of rotations (r.p.m)	Air flow	
Upper fan	850	m^3/h	6600
		l/s	1833
Lower fan	750	CFM	3884

OUTDOOR UNIT
AOTA36-45L

2-8. OPERATION NOISE

2-8-1. NOISE LEVEL CURVE

■ MODEL: AOTA36L

● Cooling

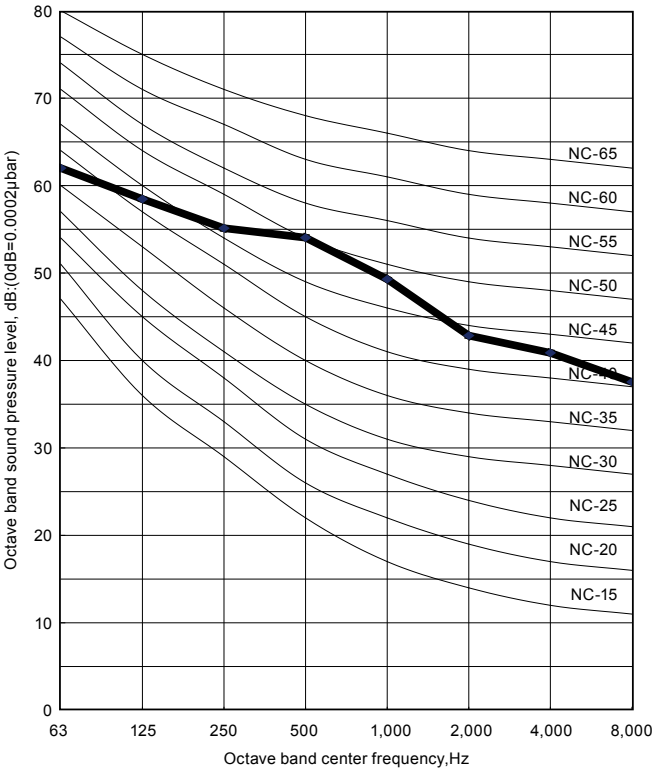

● Heating

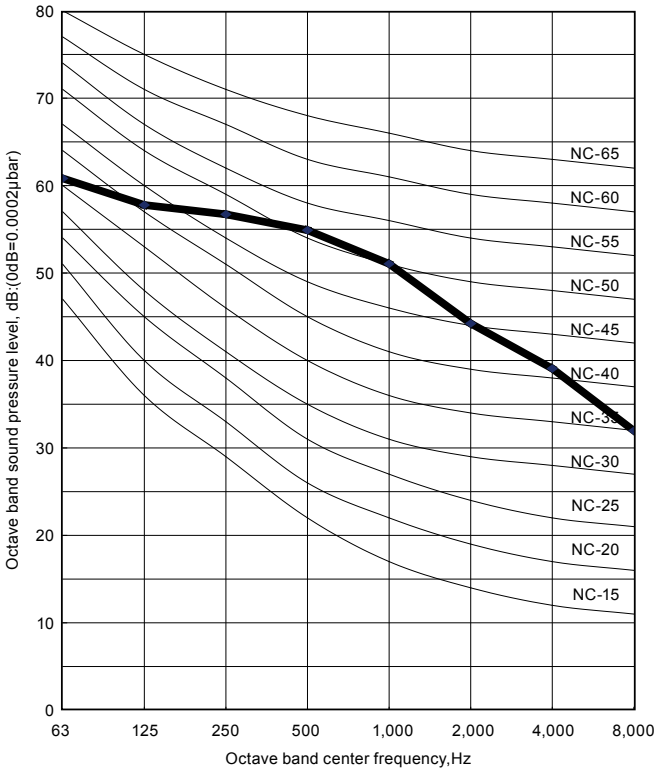

■ MODEL: AOTA45L

● Cooling

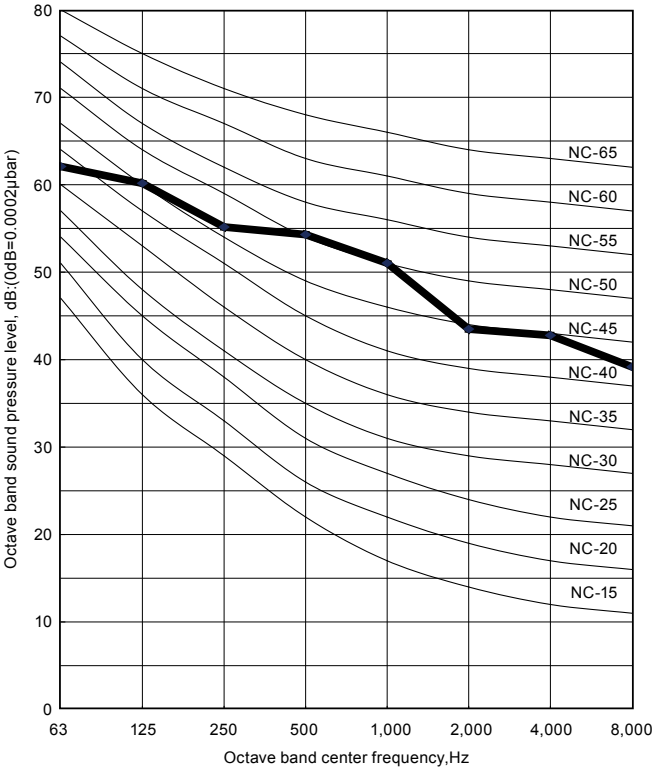

● Heating

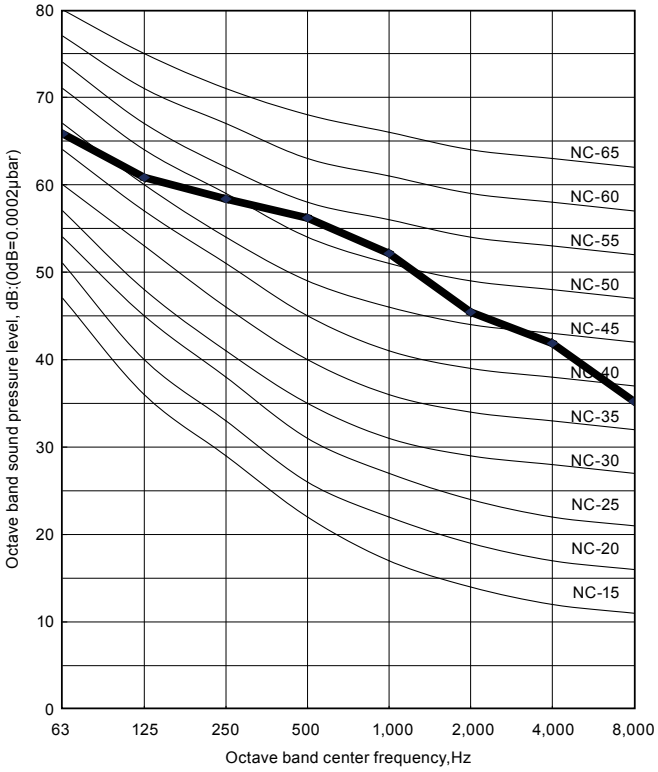

OUTDOOR UNIT
AOTA36-45L

2-8-2. SOUND LEVEL CHECK POINT

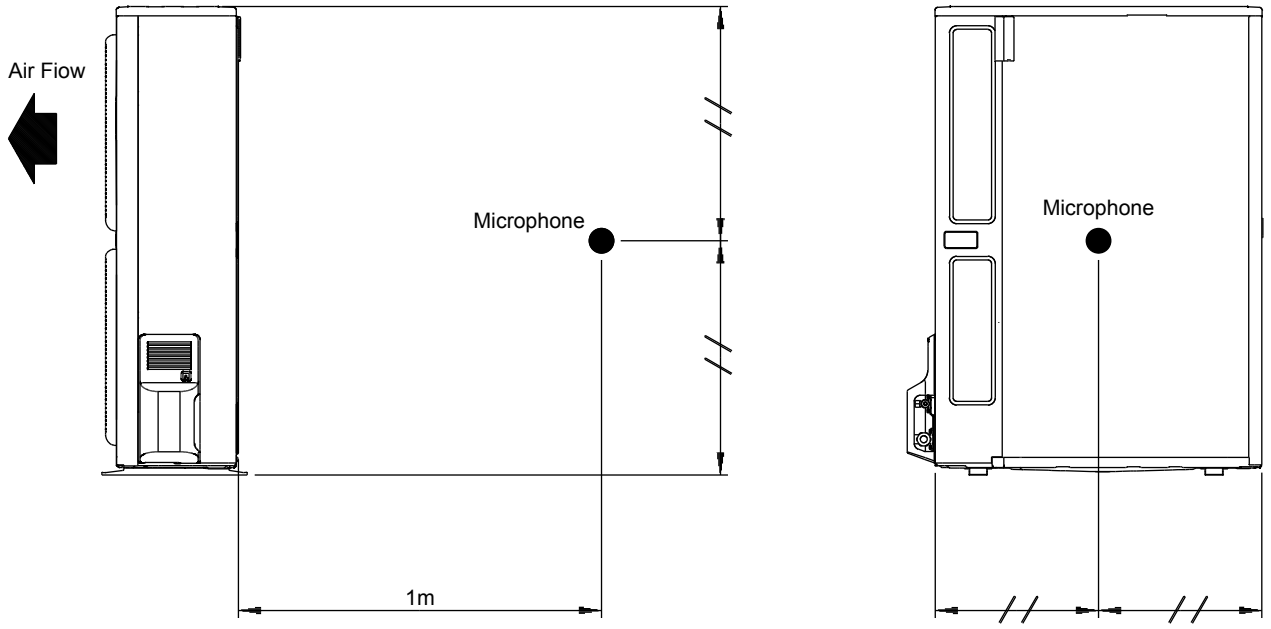

OUTDOOR UNIT
AOTA36-45L

2-9. ELECTRIC CHARACTERISTICS

Model Name			AOTA36L	AOTA45L
Power Supply	Voltage	V	240 ~	
	Frequency	Hz	50	
Max. Operating Current		A	19.0	20.0
Starting Current		A	15.0	
*1) Wiring Spec.	Main Fuse (Circuit breaker) Current	A	30	
	Power Cable	mm^2	5.3 - 6.0	
	*2)Limited wiring length	m	17	

*1) Wiring Spec. :
Selected Sample
(Selected based on Japan Electrotechnical Standard and Codes Committee E0005)

*2) Limited Wiring length :
This is the wiring length in case voltage descent is less than 2%.
When the wiring length becomes long, please select the wiring of a more larger diameter.

OUTDOOR UNIT
AOTA36-45L

2-10. SAFETY DEVICES

	Protection form	Model	
		AOTA36L	AOTA45L
Circuit protection	Current fuse (NEAR THE TERMINAL)	25A 250V	
	Current fuse (NEAR THE TERMINAL)	10A 250V	
	Current fuse (MAIN PRINTED CIRCUIT BOARD)	5A 250V	
	Current fuse (MAIN PRINTED CIRCUIT BOARD)	3.15A 250V	
Fan motor protection	Thermal protection program	OFF : 130±20°C ON : 100±20°C	
High Pressure Protection	High Pressure Switch	OFF : 4.2±0.1MPa ON : 3.2±0.15MPa	
Compressor protection	Thermal protection program (COMPRESSOR TEMP.)	OFF : 110°C ON : 80°C	
	Thermal protection program (DISCHARGE TEMP.)	OFF : 115°C ON : After 7 minutes	

OUTDOOR UNIT
AOTA36-45L

2-11. FUNCTION SETTING

■ PUSH SWITCH SETTING

● SW2 setting

Press the this push-button switch, and "PUMP DOWN OPERATION" is starting.

OUTDOOR UNIT
AOTA36-45L

Refrigerant
R410A

OUTDOOR UNIT

2. SINGLE TYPE :

AOTA36LATL

AOTA45LATL

D2D_AO013E/03
2011.02.24

1. SPECIFICATIONS

Type				INVERTER HEATPUMP	
Model name				AOTA36LATL	AOTA45LATL
Power source				240V～ 50Hz	
Available voltage range				198-264V～ 50Hz	
Starting current			A	15.0	15.0
Fan	Airflow rate	Cooling	l/s (m^3/h)	1833 (6600)	1833 (6600)
		Heating		1833 (6600)	1833 (6600)
	Type × Q'ty			Propeller × 2	
	Motor output		W	103 × 2	103 × 2
Sound pressure level		Cooling	dB(A)	54	55
		Heating		55	56
Heat exchanger type		Dimensions (H × W × D)	mm	1260 × 900 × 36.4	1260 × 900 × 36.4
		Fin pitch		1.30	1.30
		Rows x Stages		2 × 60	2 × 60
		Pipe type		Copper	
		Fin type		Aluminium	
Compressor	Type × Q'ty			Twin Rotary × 1	
	Motor output		W	3750	
Refrigerant		Type		R410A	
		Charge	g	3350	
Refrigerant oil		Type		POE	
Enclosure		Material		Steel sheet	
		Colour		Beige (10YR7.5/1.0NN)	
Dimensions (H × W × D)	Net		mm	1290 × 900 × 330	
	Gross			1430 × 1050 × 445	
Weight	Net		kg(lbs.)	98 (216)	
	Gross			107 (236)	
Connection pipe	Size	Liquid	mm	ϕ9.52 (ϕ3/8 in.)	
		Gas		ϕ15.88 (ϕ5/8 in.)	
	Method			Flare	
	Pre-charge length		m	20	
	Max. length			50	
	Max. height difference			30	
Operation range		Cooling	°C	-15 to 46	
		Heating		-15 to 24	
International Protection rating				IPX4	

Note :
Specifications are based on the following conditions.
Cooling : Indoor temperature of 27°CDB/19°CWB. and outdoor temperature of 35°CDB/24°CWB.
Heating : Indoor temperature of 20°CDB/15°CWB. and outdoor temperature of 7°CDB/6°CWB.
Pipe length : 7.5 m, Height difference : 0 m. (Outdoor unit - Indoor unit)

OUTDOOR UNIT
AOTA36-45L

2. DIMENSIONS

■MODEL : AOTA36L, AOTA45L

(Unit : mm)

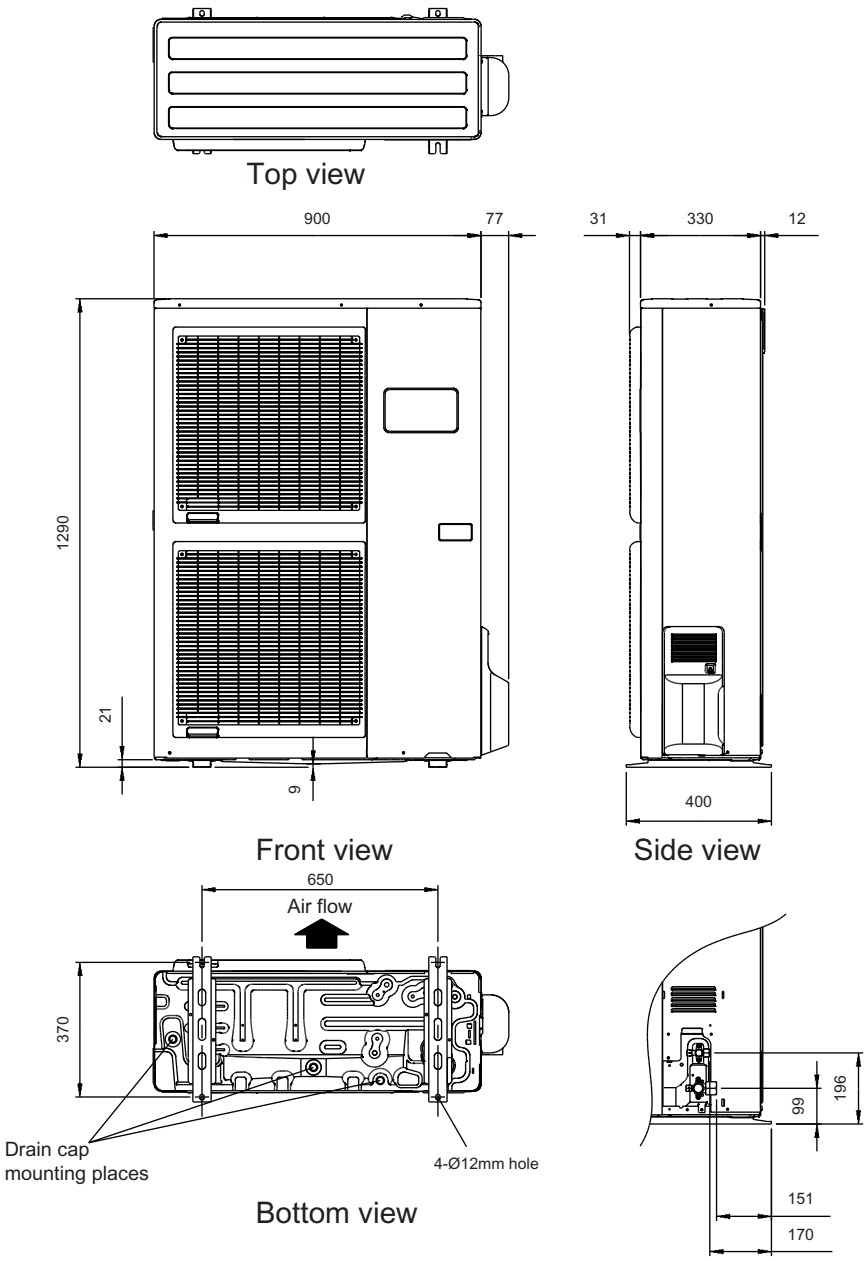

■MOUNTING POSITION

When there are obstacles at the back or front side.

When there are obstacles at the back and front sides.

When there are obstacles at the back, side(s), and top.

When there are obstacles at the back side with the installation of more than one unit.

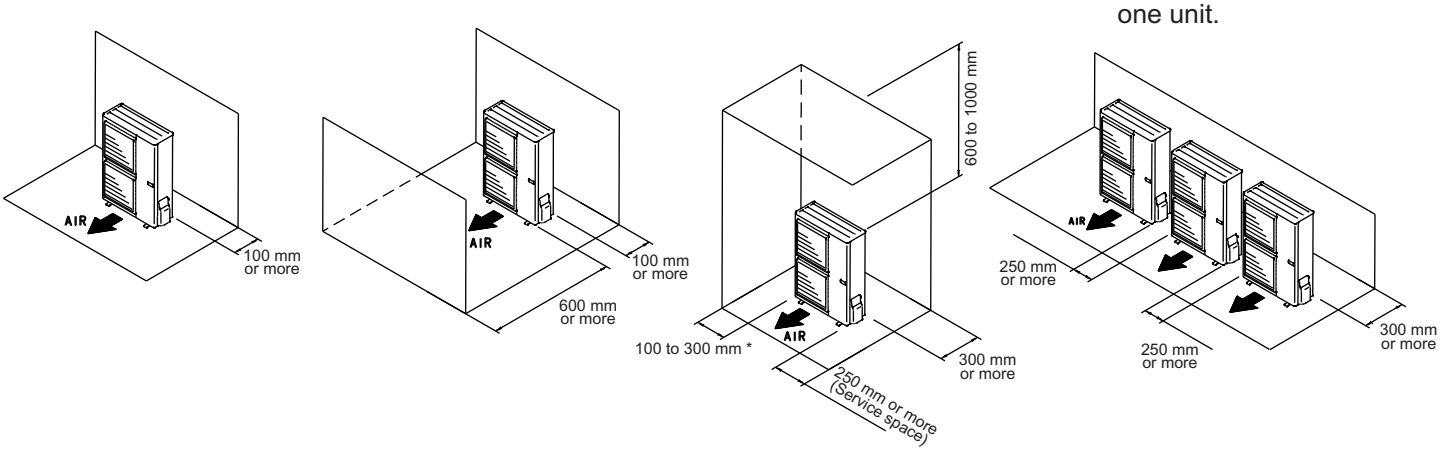

* If the space is larger than that is stated, the condition will be the same as that there are no obstacles.

3. REFRIGERANT CIRCUIT

■MODEL : AOTA36L, AOTA45L

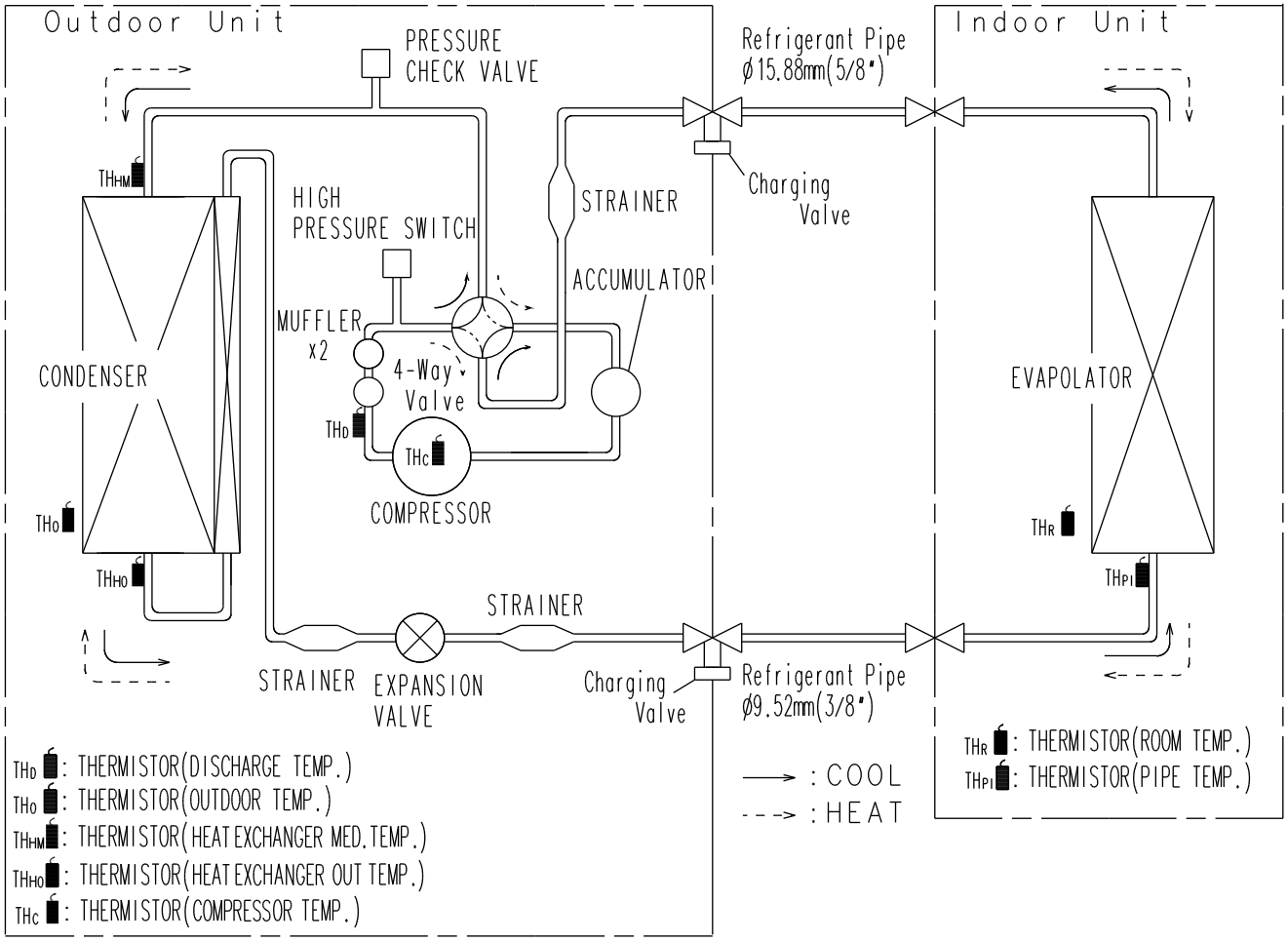

OUTDOOR UNIT
AOTA36-45L

4. WIRING DIAGRAMS

■MODEL : AOTA36L, AOTA45L

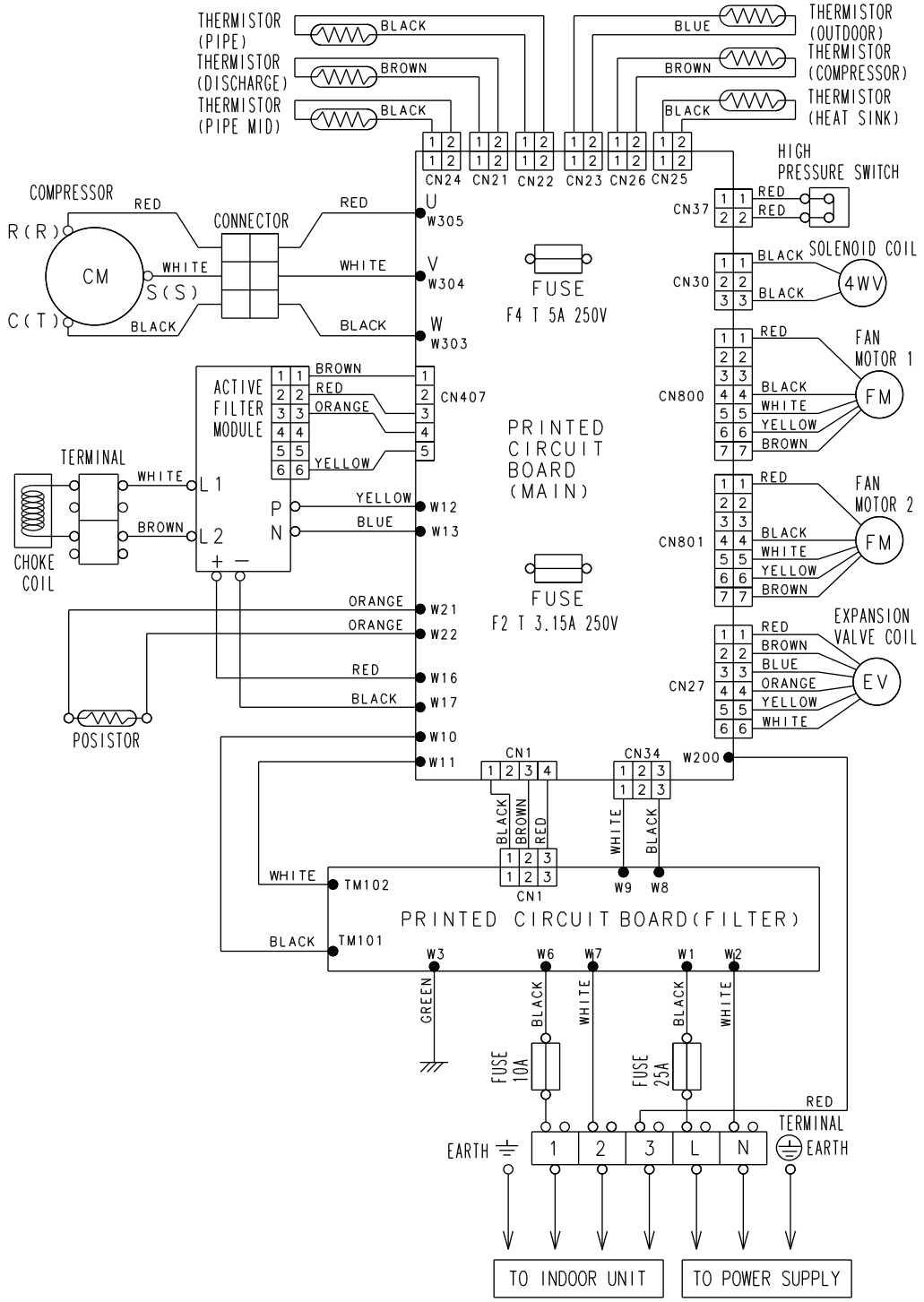

OUTDOOR UNIT
AOTA36-45L

5. COEFFICIENT OF COMPENSATION FOR PIPE LENGTH AND HEIGHT DIFFERENCE

This table is created using the maximum capacity.

■MODEL : AOTA36L

COOLING			Pipe length (m)						
			5	7.5	10	20	30	40	50
Height difference H (m)	∗1 Indoor unit is upper than outdoor unit.	30	-	-	-	-	0.884	0.881	0.862
		20	-	-	-	0.910	0.899	0.896	0.876
		10	-	-	0.969	0.925	0.914	0.911	0.890
		7.5	-	0.988	0.973	0.929	0.918	0.914	0.894
		5	1.001	0.992	0.977	0.932	0.921	0.918	0.898
		0	1.009	1.000	0.985	0.940	0.929	0.926	0.905
	∗2 Indoor unit is under than outdoor unit	-5	1.009	1.000	0.985	0.940	0.929	0.926	0.905
		-7.5	-	1.000	0.985	0.940	0.929	0.926	0.905
		-10	-	-	0.985	0.940	0.929	0.926	0.905
		-20	-	-	-	0.940	0.929	0.926	0.905
		-30	-	-	-	-	0.929	0.926	0.905

HEATING			Pipe length (m)						
			5	7.5	10	20	30	40	50
Height difference H (m)	∗1 Indoor unit is upper than outdoor unit.	30	-	-	-	-	0.971	0.950	0.927
		20	-	-	-	0.985	0.971	0.950	0.927
		10	-	-	1.016	0.985	0.971	0.950	0.927
		7.5	-	1.000	1.016	0.985	0.971	0.950	0.927
		5	0.978	1.000	1.016	0.985	0.971	0.950	0.927
		0	0.978	1.000	1.016	0.985	0.971	0.950	0.927
	∗2 Indoor unit is under than outdoor unit	-5	0.973	0.995	1.011	0.980	0.966	0.945	0.923
		-7.5	-	0.993	1.009	0.978	0.963	0.943	0.920
		-10	-	-	1.006	0.975	0.961	0.940	0.918
		-20	-	-	-	0.966	0.951	0.931	0.909
		-30	-	-	-	-	0.942	0.921	0.899

Height difference H

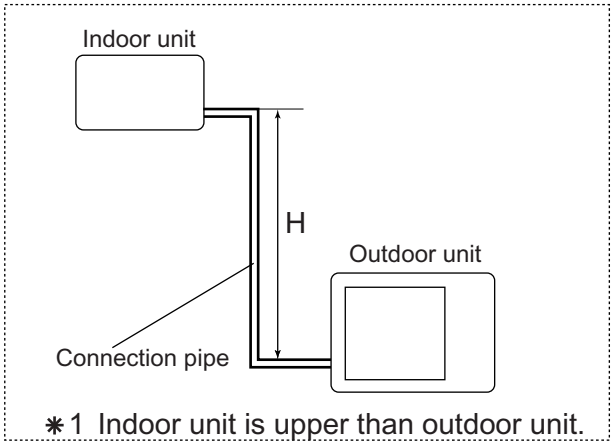

∗1 Indoor unit is upper than outdoor unit.

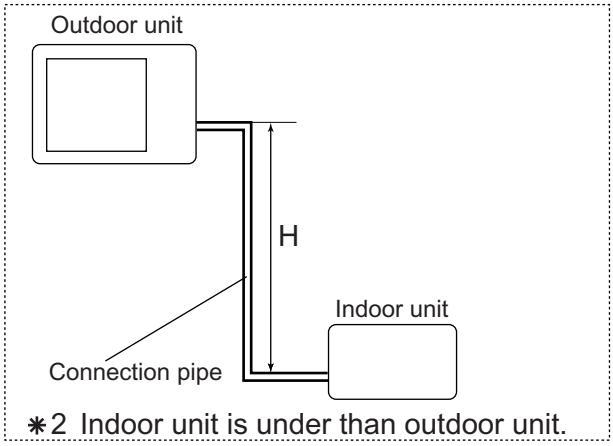

∗2 Indoor unit is under than outdoor unit.

This table is created using the maximum capacity.

■MODEL : AOTA45L

COOLING			Pipe length (m)						
			5	7.5	10	20	30	40	50
Height difference H (m)	＊1 Indoor unit is upper than outdoor unit.	30	-	-	-	-	0.893	0.890	0.870
		20	-	-	-	0.919	0.908	0.905	0.885
		10	-	-	0.979	0.934	0.923	0.920	0.899
		7.5	-	0.988	0.983	0.938	0.927	0.924	0.903
		5	1.001	0.992	0.987	0.942	0.931	0.927	0.907
		0	1.009	1.000	0.995	0.949	0.938	0.935	0.914
	＊2 Indoor unit is under than outdoor unit	-5	1.009	1.000	0.995	0.949	0.938	0.935	0.914
		-7.5	-	1.000	0.995	0.949	0.938	0.935	0.914
		-10	-	-	0.995	0.949	0.938	0.935	0.914
		-20	-	-	-	0.949	0.938	0.935	0.914
		-30	-	-	-	-	0.938	0.935	0.914

HEATING			Pipe length (m)						
			5	7.5	10	20	30	40	50
Height difference H (m)	＊1 Indoor unit is upper than outdoor unit.	30	-	-	-	-	0.971	0.950	0.927
		20	-	-	-	0.985	0.971	0.950	0.927
		10	-	-	1.016	0.985	0.971	0.950	0.927
		7.5	-	1.000	1.016	0.985	0.971	0.950	0.927
		5	0.978	1.000	1.016	0.985	0.971	0.950	0.927
		0	0.978	1.000	1.016	0.985	0.971	0.950	0.927
	＊2 Indoor unit is under than outdoor unit	-5	0.973	0.995	1.011	0.980	0.966	0.945	0.923
		-7.5	-	0.993	1.009	0.978	0.963	0.943	0.920
		-10	-	-	1.006	0.975	0.961	0.940	0.918
		-20	-	-	-	0.966	0.951	0.931	0.909
		-30	-	-	-	-	0.942	0.921	0.899

Height difference H

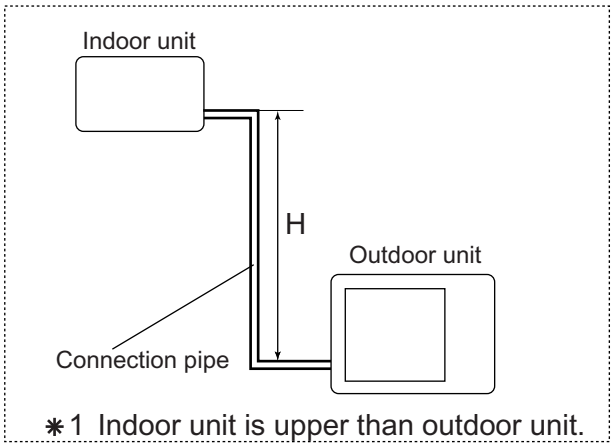

＊1 Indoor unit is upper than outdoor unit.

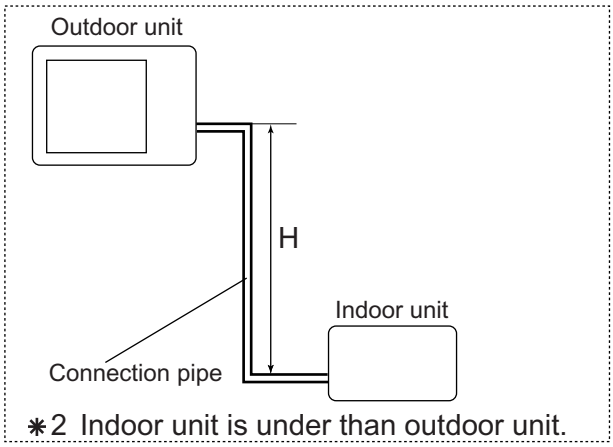

＊2 Indoor unit is under than outdoor unit.

6. ADDITIONAL CHARGE CALCULATION

■ MODEL : AOTA36L, AOTA45L

Refrigerant type		R410A
Refrigerant amount	g	3350

● REFRIGERANT CHARGE

Total pipe length	m	20 or less	30	40	50	50g/m
Additional charge	g	0	500	1000	1500	

OUTDOOR UNIT
AOTA36-45L

7. AIR FLOW

■MODEL : AOTA36L, AOTA45L

●COOLING

	Number of rotations (r.p.m)	Air flow	
Upper fan	850	m^3/h	6600
		l/s	1833
Lower fan	750	CFM	3884

●HEATING

	Number of rotations (r.p.m)	Air flow	
Upper fan	850	m^3/h	6600
		l/s	1833
Lower fan	750	CFM	3884

OUTDOOR UNIT
AOTA36-45L

8. OPERATION NOISE

8-1. NOISE LEVEL CURVE

■COOLING

●MODEL : AOTA36L

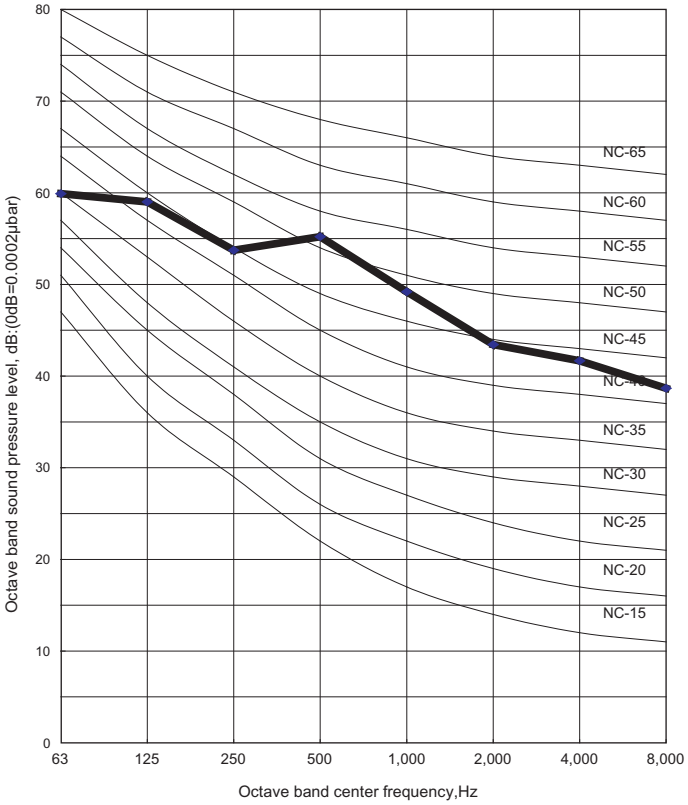

●MODEL : AOTA45L

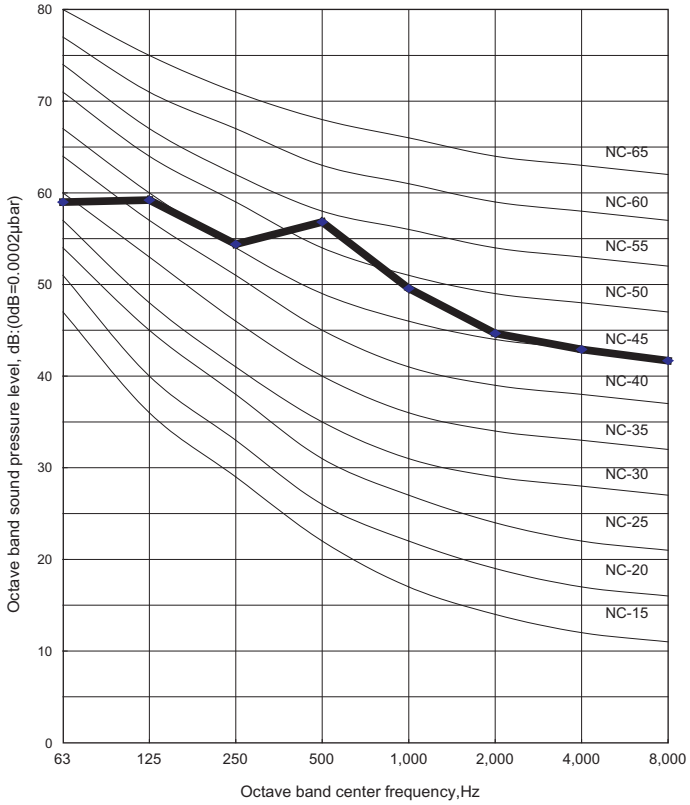

■HEATING

●MODEL : AOTA36L

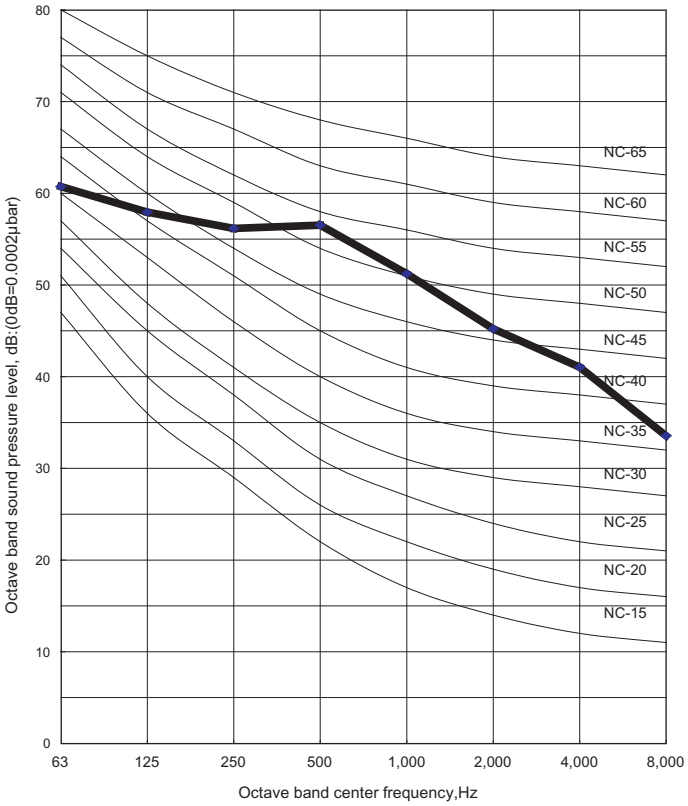

●MODEL : AOTA45L

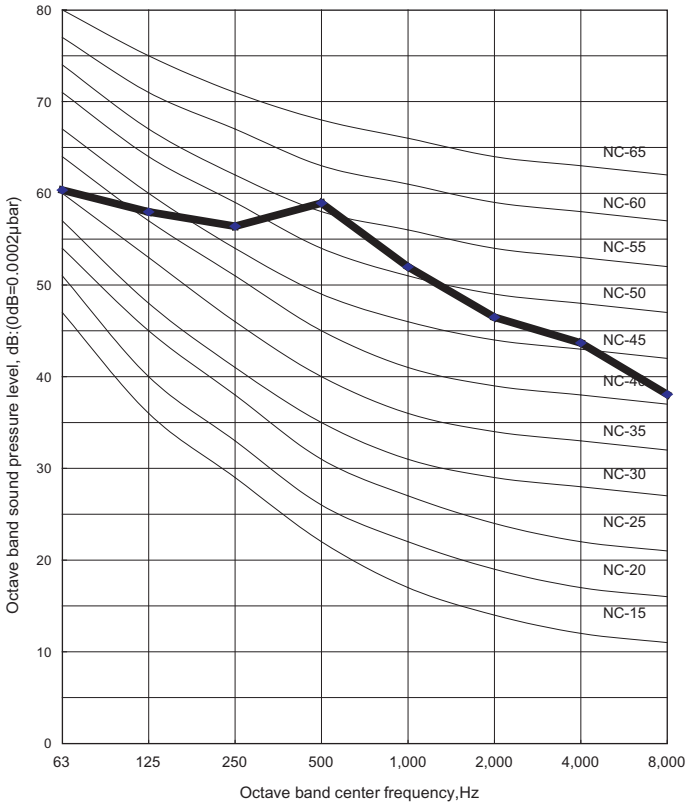

OUTDOOR UNIT
AOTA36-45L

8-2. SOUND LEVEL CHECK POINT

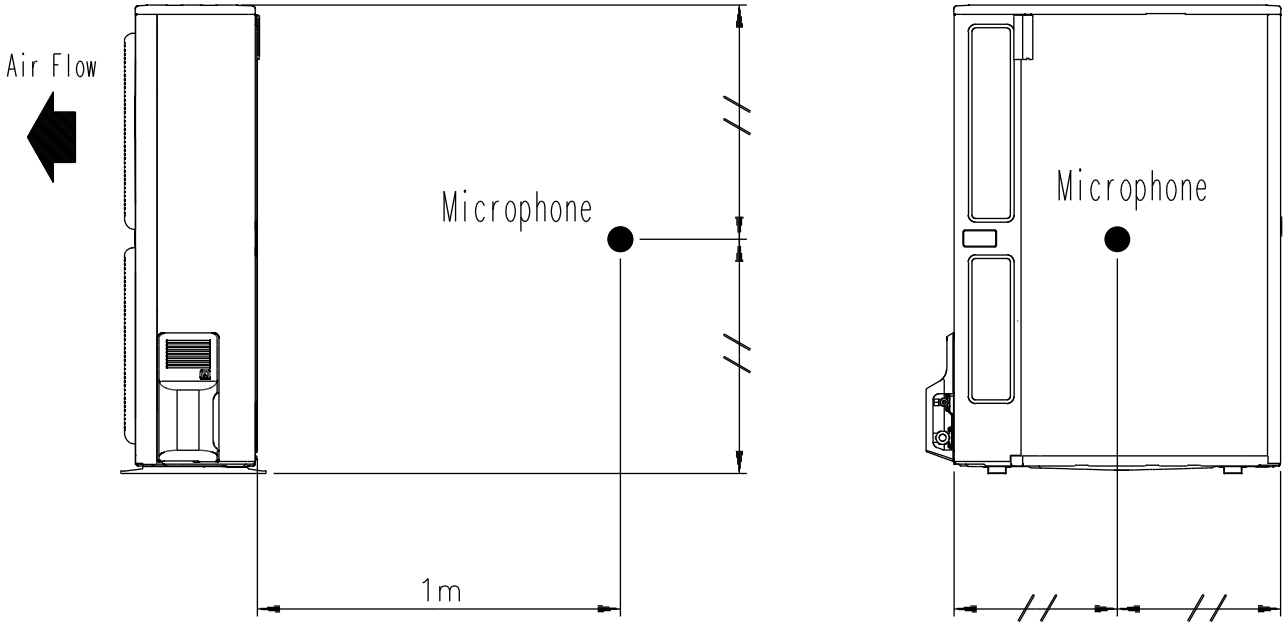

OUTDOOR UNIT
AOTA36-45L

9. ELECTRIC CHARACTERISTICS

Model name			AOTA36L	AOTA45L
Power supply	Voltage	V	240～	
	Frequency	Hz	50	
Max. operating current		A	19.0	20.0
Starting current		A	15.0	
*1) Wiring spec.	Main fuse (Circuit breaker) current	A	30	
	Power cable	mm^2	5.3 - 6.0	
	*2)Limited wiring length	m	17	

*1) Wiring spec. :
Selected sample
(Selected based on Japan Electrotechnical Standard and Codes Committee E0005)

*2) Limited wiring length :
This is the wiring length in case voltage descent is less than 2%.
When the wiring length becomes long, please select the wiring of a more larger diameter.

OUTDOOR UNIT
AOTA36-45L

10. SAFETY DEVICES

	Protection form	Model	
		AOTA36L	AOTA45L
Circuit protection	Current fuse (NEAR THE TERMINAL)	25A 250V	
	Current fuse (NEAR THE TERMINAL)	10A 250V	
	Current fuse (MAIN PRINTED CIRCUIT BOARD)	5A 250V	
	Current fuse (MAIN PRINTED CIRCUIT BOARD)	3.15A 250V	
Fan motor protection	Thermal protection program	OFF : 130±20°C ON : 100±20°C	
High Pressure Protection	High Pressure Switch	OFF : 4.2±0.1MPa ON : 3.2±0.15MPa	
Compressor protection	Thermal protection program (COMPRESSOR TEMP.)	OFF : 110°C ON : 80°C	
	Thermal protection program (DISCHARGE TEMP.)	OFF : 115°C ON : After 7 minutes	

OUTDOOR UNIT
AOTA36-45L